HITACHI

YUTAKI R32 SERIES

Technical Catalogue

Split system - Outdoor unit
RAS-(2-3)WHVRP

Split system - Indoor unit

YUTAKI S
RWM-(2.0-3.0)NRE(-W)

YUTAKI S COMBI
RWD-(2.0-3.0)NRW(S)E-(200/260)S(-K)(-W)

Monobloc system

YUTAKI M
RASM-(2-3)VRE

HITACHI

Contents

General information 1

General data 2

Capacity and selection data 3

Acoustic characteristic curves 4

Working range 5

General dimensions 6

Refrigerant cycle and hydraulic circuit 7

Refrigerant and water piping 8

Electrical and control settings 9

Optional functions 10

General Index

1. General information 1

1.1 General information 2

1.1.1 General notes 2
1.1.2 Introduction 2
1.1.2.1 Overview of YUTAKI R32 system 2
1.1.2.2 Summary of operations 3

1.2 Applied symbols 5

1.3 Product guide 6

1.3.1 Classification of the units 6
1.3.1.1 Split system - Outdoor unit 6
1.3.1.2 Split system - Indoor unit 6
1.3.1.3 Monobloc system 7
1.3.2 Product guide 7
1.3.2.1 Split system - Outdoor unit 7
1.3.2.2 Split system - Indoor unit 7
1.3.2.3 Monobloc system 9
1.3.3 Accessory code list 10

2. General data 15

2.1 Capacity tables 17

2.1.1 Nominal capacity-performance tables 17
2.1.1.1 Considerations 17
2.1.1.2 Capacity-performance data 17

2.2 ERP performance data 20

2.2.1 General considerations 20
2.2.2 General ERP data for space heaters 20
2.2.2.1 ERP data - YUTAKI S 20
2.2.2.2 ERP data - YUTAKI S COMBI 22
2.2.2.3 ERP data - YUTAKI M 24
2.2.2.4 ERP additional data - YUTAKI S 26
2.2.2.5 ERP additional data - YUTAKI S COMBI 26
2.2.2.6 ERP additional data - YUTAKI M 26
2.2.3 General ERP data for combi heaters 27
2.2.3.1 YUTAKI S COMBI 27
2.2.4 General ERP data for hot water storage tanks (YUTAKI S & YUTAKI M) 27

2.3 Cooling mode application (EN 14825) (Models with cooling kit accessory) 28

2.3.1 Cooling data (EN 14825) - YUTAKI S 28
2.3.2 Cooling data (EN 14825) - YUTAKI S COMBI 29
2.3.3 Cooling data (EN 14825) - YUTAKI M 34
2.3.4 Additional Cooling data (EN 14825) - YUTAKI S 35
2.3.5 Additional Cooling data (EN 14825) - YUTAKI S COMBI 35
2.3.6 Additional Cooling data (EN 14825) - YUTAKI M 37

2.4 General specifications 38

2.4.1 Considerations 38
2.4.2 Split system - Outdoor unit 39

2.4.3 Split system - Indoor unit 40
2.4.3.1 YUTAKI S 40
2.4.3.2 YUTAKI S COMBI 41
2.4.4 Monobloc system - YUTAKI M 44
2.4.5 Domestic Hot Water Tank 45

2.5 Component data 46
2.5.1 Split system - Outdoor unit 46
2.5.2 Split system - Indoor unit 47
2.5.2.1 YUTAKI S 47
2.5.2.2 YUTAKI S COMBI 48
2.5.3 Monobloc system - YUTAKI M 52

2.6 Electrical data 54
2.6.1 Considerations 54
2.6.2 Split system - Outdoor unit 54
2.6.3 Split system - Indoor unit 54
2.6.3.1 YUTAKI S 54
2.6.3.2 YUTAKI S COMBI 55
2.6.4 Monobloc system - YUTAKI M 55

3. Capacity and selection data 57

3.1 YUTAKI S 58
3.1.1 Maximum heating capacity table (kW) (Integrated) 58
3.1.2 Maximum cooling capacity table (kW) 59

3.2 YUTAKI S COMBI 60
3.2.1 Maximum heating capacity table (kW) (Integrated) 60
3.2.2 Maximum cooling capacity table (kW) 61

3.3 YUTAKI M 62
3.3.1 Maximum heating capacity table (kW) (Integrated) 62
3.3.2 Maximum cooling capacity table (kW) 63

3.4 Correction factors 64
3.4.1 Piping length correction factor 64
3.4.2 Correction factor owing to use of glycol (only for YUTAKI M) 66

4. Acoustic characteristic curves 67

4.1 Considerations 68

4.2 Sound pressure level for Outdoor unit and YUTAKI M 69

5. Working range 71

5.1 Power supply working range 72

5.2 Temperature working range 72
5.2.1 Space heating 72
5.2.2 DHW 73
5.2.3 Swimming pool heating 74
5.2.4 Space cooling (Necessary cooling kit) 74

5.3 Hydraulic working range 75

5.3.1 Hydraulic data 75
5.3.2 Pump performance curves 76

6. General dimensions 79

6.1 Name of parts and Dimensional data 80

6.1.1 Split system - Outdoor unit 80
6.1.2 Split system - Indoor unit 81
6.1.2.1 YUTAKI S 81
6.1.2.2 YUTAKI S COMBI 82
6.1.3 Monobloc system - YUTAKI M 87

6.2 Service space 88

6.2.1 Split system - Outdoor unit 88
6.2.2 Split system - Indoor unit 88
6.2.2.1 YUTAKI S 88
6.2.2.2 YUTAKI S COMBI 89
6.2.3 Monobloc system - YUTAKI M 90

7. Refrigerant cycle and hydraulic circuit 91

7.1 Refrigerant cycle and hydraulic circuit for Split system 92

7.1.1 YUTAKI S 92
7.1.2 YUTAKI S COMBI 93

7.2 Refrigerant cycle and hydraulic circuit for Monobloc system - YUTAKI M 94

8. Refrigerant and water piping 95

8.1 General notes before performing piping work 96

8.1.1 Piping work 96
8.1.2 Suspension of refrigerant and water pipes 96

8.2 Refrigerant circuit 97

8.2.1 General notes R32 refrigerant 97
8.2.2 Refrigerant piping 97
8.2.3 Refrigerant charge 99
8.2.3.1 Refrigerant charge amount 99
8.2.3.2 Refrigerant charge before shipment (W_0 (kg)) 99

8.3 Space heating and DHW 99

8.3.1 Additional hydraulic necessary elements for space heating 99
8.3.2 Additional hydraulic necessary elements for DHW 100
8.3.3 Additional hydraulic optional elements (For DHW) 102
8.3.4 Additional hydraulic necessary elements for DHW (only for UK market) 102
8.3.5 Requirements and recommendations for the hydraulic circuit 103
8.3.6 Water piping 104
8.3.7 Water quality 105

9. Electrical and control settings 107

9.1 General check 108

9.2 System wiring diagram 110

9.3 Electrical connection 111

9.3.1 Wiring size 111
9.3.2 Minimum requirements of the protection devices 112

9.4 Transmission wiring 113

9.4.1 YUTAKI units 113

9.5 Optional indoor unit wiring (accessories) 114

9.6 Setting of DIP switches and RSW switches 117

9.6.1 Outdoor unit RAS-(2/2.5/3)WHVRP and RASM-(2-3)VRE 117
9.6.1.1 Location of DIP switches and rotary switches 117
9.6.1.2 Function of DIP switches and rotary switches 117
9.6.1.3 LED indication 119
9.6.2 YUTAKI unit 119
9.6.2.1 Location of DIP switches and rotary switches 119
9.6.2.2 Function of DIP switches and rotary switches 119
9.6.2.3 LED indication 122

10. Optional functions 123

10.1 Indoor unit 124

10.1.1 Optional functions by DSW setting 124
10.1.2 Optional functions by Unit controller (PC-ARFH1E) 126
10.1.2.1 Optional functions for Space Heating or Space Cooling 126
10.1.2.2 Optional functions for DHW 126
10.1.2.3 Optional functions for Heat pump 127
10.1.2.4 Optional functions for Unit controller (PC-ARFH1E) 128
10.1.3 Optional external input/output configuration signals 128

10.2 Additional functions by accessory sensor 131

10.3 Output/input signals for outdoor units and YUTAKI M units 132

HITACHI

1. General information

1

Index

1.1 General information 2
1.1.1 General notes 2
1.1.2 Introduction 2
1.1.2.1 Overview of YUTAKI R32 system 2
1.1.2.2 Summary of operations 3
1.2 Applied symbols 5
1.3 Product guide 6
1.3.1 Classification of the units 6
1.3.1.1 Split system - Outdoor unit 6
1.3.1.2 Split system - Indoor unit 6
1.3.1.3 Monobloc system 7
1.3.2 Product guide 7
1.3.2.1 Split system - Outdoor unit 7
1.3.2.2 Split system - Indoor unit 7
1.3.2.3 Monobloc system 9
1.3.3 Accessory code list 10

1.1 General information

1.1.1 General notes

© Copyright 2019 Johnson Controls-Hitachi Air Conditioning Spain, S.A.U. – All rights reserved.

No part of this publication may be reproduced, copied, filed or transmitted in any shape or form without the permission of Johnson Controls-Hitachi Air Conditioning Spain, S.A.U.

Within the policy of continuous improvement of its products, Johnson Controls-Hitachi Air Conditioning Spain, S.A.U. reserves the right to make changes at any time without prior notification and without being compelled to introducing them into previously sold products. This document may therefore have been subject to amendments during the life of the product.

HITACHI makes every effort to offer correct, up-to-date documentation. Despite this, printing errors cannot be controlled by HITACHI and are not its responsibility.

As a result, some of the images or data used to illustrate this document may not refer to specific models. No claims will be accepted based on the data, illustrations and descriptions included in this manual.

No type of modification must be made to the equipment without prior, written authorization from the manufacturer.

NOTE

This air conditioner has been designed for standard air conditioning for human beings. For use in other applications, please contact your HITACHI dealer or service contractor.

1.1.2 Introduction

HITACHI proudly announces the newest R32 range of air-to-water heat pumps in its award-winning YUTAKI range.

YUTAKI units produce heating and domestic hot water like any oil or gas boiler, but transforming renewable energy from the outside air into heat. Air to water heat pumps extract the free energy present in the air, which is enough to heat a home up to a comfortable temperature, even on the coldest winter day. Every kW of electricity used to power the heat pump can yield up to more than 5 kW of energy for heating; this provides savings of up to 80% on heating expenses compared to a traditional fossil fuel boiler.

The new R32 YUTAKI series, based on state-of-the-art technology, does not only achieve an outstanding performance in space heating but also provides domestic hot water with high efficiency. Additionally, cooling operation for summer can also be provided installing the dedicated “Cooling kit” accessory of HITACHI.

The system is simple to control; its new user controller (PC-ARFH1E) improves the acclaimed and successful design used with the existing LCD controller and provides a great deal of new functions like: wizard start-up configuration, auto cool/heat, improved timer, etc.

1.1.2.1 Overview of YUTAKI R32 system

The wide range of YUTAKI products is basically divided in two types of system:

- Split system
- Monobloc system

◆ **Split system - YUTAKI S, YUTAKI S COMBI**

It consists of one outdoor unit and one indoor unit. The outdoor unit extracts the heat present in the air, increases its refrigerant temperature and transmits it to the water circuit using the plate heat exchanger of the indoor unit, where the heat is taken to radiators (fan-coils), underfloor heating components or both (2nd temperature area).

Two types of indoor unit can be used in heating split systems:

YUTAKI S

The indoor unit of YUTAKI S is designed for space heating, in wall-mounted installation. It is convenient for new installations with low capacity requirements (Well insulated installations, high efficiency radiators...).

YUTAKI S COMBI

The indoor unit of YUTAKI S COMBI is conceived as a floor standing unit. It is prepared for heating operation as well as for domestic hot water production. For this purpose, it has a built-in domestic hot water tank available in two sizes (200 or 260 L). In line with YUTAKI S units, it meets the needs of installations with low capacity requirements.

Furthermore, special YUTAKI S COMBI models have been designed with a specific solar tank for the use of solar panels. Also, new models for the UK market that meet the UK requirements referred in the UK Building Regulations.

◆ **Monobloc system - YUTAKI M**

YUTAKI M is a monobloc air to water heat pump system composed by only an special outdoor unit, which carries out the function of an air-to-water heat pump. This results in an excellent solution when installation space available is limited.

YUTAKI M is designed to be installed outdoors, in any kind of dwelling (house, apartment, villa,…), whether in a new construction or in an existing building. Installation work is greatly simplified thanks to the lack of refrigerant piping connections.

1.1.2.2 Summary of operations

Space heating

YUTAKI units are factory-supplied ready for space heating operation. Different heating installation configurations can be selected, providing a comfortable atmosphere all year long, even in the coldest climates:

- ***Mono-valent system***
  The air to water heat pump is sized to provide 100% of the heating requirements on the coldest day the year.
- ***Mono-energy system***
  This is the most popular configuration. The air to water heat pump is sized to provide 80% of the heating requirements on the coldest days of the year. An auxiliary electric heater is used to provide the additional heating required on cold days. This option usually results in an ideal balance between installation costs and future energy consumption, as proven by its popularity in colder climates than ours, such as Sweden and Norway.
- ***Alternating Bi-valent system***
  For installations with an existing heating system by boiler and when is needed to heat the supplied water temperature to the circuit up to high temperatures (80ºC), the boiler can be configured to alternate with the air to water heat pump.

Selecting the different configuration types it is possible to adapt the system to all customer requirements, providing a wide application range from the simplest configuration to complete configuration: Radiator, heating floor or both (2nd temperature area).

Domestic hot water production

For YUTAKI S, the HITACHI accessory “DHWT-(200/260)S-3.0H2E” can be used for the production of DHW.

In case of YUTAKI S COMBI, the domestic hot water tank is built in the indoor unit.

YUTAKI M models also give the option of domestic hot water production, allowing the user to benefit from the heat pump’s high efficiency and achieve domestic hot water. This is made possible by a domestic hot water tank. The HITACHI accessory “DHWT-(200/260)S-3.0H2E” can be used for the production of DHW.

An electric heater is incorporated inside both remote and integrated tanks in order to allow an immediate heating of the domestic hot water in accordance with the user’s needs.

Space cooling

YUTAKI units can also be operated in cooling operation. The dedicated “Cooling kit” accessory has been designed for this purpose. Combining the heating only models with these cooling kits, the reversible models become available. In this case, combination with fan-coils, refreshing floor or both (2nd temperature area) can be applied.

Combination with solar panels

YUTAKI system can be combined with solar panel. The solar combination enables to heat up the DHW by means of the sun. The solar combination is designed to transfer the heat from the solar panels (sun radiation) to the heat exchanger of DHW tank.

In case of YUTAKI S COMBI, a specific model with integrated tank for solar combination has been designed, as explained before.

Swimming pool water heating operation

For summer session period, YUTAKI system can be used to heat up the water temperature of swimming pools up to a value between 24 and 33ºC.

1.2 Applied symbols

During normal air conditioning system design work or unit installation, greater attention must be paid in certain situations requiring particular care in order to avoid damage to the unit, the installation or the building or property.

Situations that pose a risk to the safety of those in the surrounding area or to the unit itself are clearly indicated in this manual.

A series of special symbols are used to clearly identify these situations.

Pay close attention to these symbols and to the messages following them, as your safety and that of others depends on it.

DANGER

- ***The text following this symbol contains information and instructions relating directly to your safety.***
- ***Not taking these instructions into account could lead to serious, very serious or even fatal injuries to you and others.***

In the texts following the danger symbol you can also find information on safety procedures during unit installation.

CAUTION

- *The text following this symbol contains information and instructions relating directly to your safety.*
- *Not taking these instructions into account could lead to minor injuries to you and others.*
- *Not taking these instructions into account could lead to unit damage.*

In the texts following the caution symbol you can also find information on safety procedures during unit installation.

NOTE

- *The text following this symbol contains information or instructions that may be of use or that require a more thorough explanation.*
- *Instructions regarding inspections to be made on unit parts or systems may also be included.*

1.3 Product guide

1.3.1 Classification of the units

1.3.1.1 Split system - Outdoor unit

Unit type: Outdoor unit (Split air system)
Position-separating hyphen (fixed)
Compressor power (HP): 2, 2.5, 3
For water combination
Heat pump
V: Single phase unit (1~ 230V 50Hz)
R: R32 refrigerant
Premium series

RAS	-	X	W	H	V	R	P

1.3.1.2 Split system - Indoor unit

◆ **YUTAKI S**

Unit type: YUTAKI S (Split system - Single water module (Indoor unit) - Medium/Low temperature)
Position-separating hyphen (fixed)
Compressor power of the combined outdoor unit (HP): 2.0, 2.5, 3.0
N: R410A refrigerant
R: R32 refrigerant
Made in Europe
-W: Without LCD Controller (sold separately as accessory)

RWM	-	X.X	N	R	E	(-W)

◆ **YUTAKI S COMBI**

Unit type: YUTAKI S COMBI (Split system - Dual water module (Indoor unit + Domestic hot water tank) - Medium/Low temperature)
Position-separating hyphen (fixed)
Compressor power of the combined outdoor unit (HP): 2.0, 2.5, 3.0
N: R410A refrigerant
R: R32 refrigerant
Water-to-water DHW heat exchanger
— : Standard model
S : Model for solar combination
Made in Europe
Position-separating hyphen (fixed)
Tank model: 200/260 L
Tank material: Stainless steel
-K: Model for UK market
-W: Without LCD Controller (sold separately as accessory)

RWD	-	X.X	N	R	W	(X)	E	-	XXX	S	(-K)	(-W)

1.3.1.3 Monobloc system

◆ **YUTAKI M**

Unit type: YUTAKI M (Monobloc system - Single water module (Outdoor unit) - Low/Medium temperature)

	Position-separating hyphen (fixed)				
		Compressor power (HP): 2.0, 3.0			
			V: Single phase unit (1~ 230V 50Hz)		
				R32 refrigerant	
					Made in Europe
RASM	-	X.X	V	R	E

1.3.2 Product guide

1.3.2.1 Split system - Outdoor unit

1~ 230V 50Hz	
Unit	**Code**
RAS-2WHVRP	60289149
RAS-2.5WHVRP	60289150
RAS-3WHVRP	60289151

1.3.2.2 Split system - Indoor unit

◆ **YUTAKI S**

1~ 230V 50Hz	
Unit	**Code**
RWM-2.0NRE RWM-2.0NRE-W	7E475203 7E475303
RWM-2.5NRE RWM-2.5NRE-W	7E475204 7E475304
RWM-3.0NRE RWM-3.0NRE-W	7E475205 7E475305

NOTE

Icons between brackets mean possible extra operations to the factory-supplied operations. For cooling operation, refer to the Cooling kit accessory for YUTAKI S units.

◆ YUTAKI S COMBI

NOTE

Icons between brackets mean possible extra operations to the factory-supplied operations. For cooling operation, refer to the Cooling kit accessory for YUTAKI S COMBI units.

Standard model

1~ 230V 50Hz	
Unit	Code
RWD-2.0NRWE-200S RWD-2.0NRWE-200S-W	7E483042 7E483142
RWD-2.0NRWE-260S RWD-2.0NRWE-260S-W	7E483052 7E483152
RWD-2.5NRWE-200S RWD-2.5NRWE-200S-W	7E483043 7E483143
RWD-2.5NRWE-260S RWD-2.5NRWE-260S-W	7E483053 7E483153
RWD-3.0NRWE-200S RWD-3.0NRWE-200S-W	7E483044 7E483144
RWD-3.0NRWE-260S RWD-3.0NRWE-260S-W	7E483054 7E483154

Model for solar combination

1~ 230V 50Hz	
Unit	Code
RWD-2.0NRWSE-260S RWD-2.0NRWSE-260S-W	7E483342 7E483442
RWD-2.5NRWSE-260S RWD-2.5NRWSE-260S-W	7E483343 7E483443
RWD-3.0NRWSE-260S RWD-3.0NRWSE-260S-W	7E483344 7E483444

Model for UK market

1~ 230V 50Hz	
Unit	Code
RWD-2.0NRWE-200S-K	7E483242
RWD-2.5NRWE-200S-K	7E483243
RWD-3.0NRWE-200S-K	7E483244
RWD-2.0NRWE-260S-K	7E483251
RWD-2.5NRWE-260S-K	7E483252
RWD-3.0NRWE-260S-K	7E483253

1.3.2.3 Monobloc system

◆ **YUTAKI M**

1~ 230V 50Hz	
Unit	Code
RASM-2VRE	7E351016
RASM-3VRE	7E351026

NOTE

The required unit controller (PC-ARFH1E) has to be ordered as an accessory.

1.3.3 Accessory code list

Model	Ref.
For all series	A
For YUTAKI S units	S
For YUTAKI S COMBI units	SC
For YUTAKI M units	M

◆ Cooling kit accessories

Accessory	Ref.	Name	Code	Figure
ATW-CKS-01	S	Cooling operation kit for YUTAKI S (For 2.0~3.0HP)	7E549927	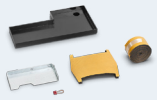
ATW-CKSC-01	SC	Cooling operation kit for YUTAKI S COMBI (For 2.0~6.0HP)	7E549930	
ATW-CKM-01	M	Cooling operation kit for YUTAKI M (For 2 ~ 6HP)	7E549931	

◆ Control accessories

Accessory	Ref.	Name	Code	Figure
NEW PC-ARFH1E	A	Unit controller Wired room thermostat for YUTAKI units (Languages EN, ES, DE, FR, IT, NL, SL)	7E543011	
NEW PC-ARFH1E-02	A	Unit controller Wired room thermostat for YUTAKI units (Languages EN, DA, SV, FI, PT, HR, EL)	7E543012	
NEW PC-ARFH1E-03	A	Unit controller Wired room thermostat for YUTAKI units (Languages EN, PL, UK, HU, RO, SL, CS)	7E543013	
ATW-RTU-04	A	Wireless ON/OFF thermostat (Receiver + Room thermostat)	7E543003	
NEW ATW-RTU-07	A	Wireless Intelligent thermostat (Receiver + Room thermostat)	70543015	
ATW-RTU-06	A	Wireless Intelligent thermostat for 2nd circuit (Only Room thermostat. For Intelligent thermostat application)	7E543005	

Accessory	Ref.	Name	Code	Figure
ATW-MBS-02	A	MODBUS gateway for YUTAKI units	7E549924	
ATW-KNX-02	A	KNX interface for YUTAKI units	7E549925	
ATW-TAG-02	A	Home automation gateway for YUTAKI units	70549926	
ATW-AOS-02	A	Auxiliary output signal box (Relay board for additional output signals)	7E549935	
ATW-YMM-01	M	Remote control box for YUTAKI M	7E549936	
AHP-SMB-01	A	SmartBox (Hi-Box)	70549919	
ATW-FCP-01	S SC	Unit controller cover	7E549938	

◆ Temperature sensor accessories

Accessory	Ref.	Name	Code	Figure
ATW-2OS-02	A	2nd. outdoor temperature sensor	9E500017	
ATW-ITS-01	A	Indoor wired room temperature sensor	7E549932	
ATW-WTS-02Y	A	Universal water temperature sensor	9E500004	

◆ Water circuit accessories

Accessory	Ref.	Name	Code	Figure
ATW-2TK-06	SC	2nd zone mixing kit (Integrable in YUTAKI S COMBI 200 L model)	7E549951	
ATW-2TK-07	A	2nd zone mixing kit (Wall mounted model)	7E549952	
DHWT-200S-3.0H2E	S M	Domestic hot water tank (200 L)	70544002	
DHWT-300S-3.0H2E		Domestic hot water tank (300 L)	70544003	
ATW-HSK-01	A	Hydraulic separator	7E549905	
ATW-AQT-01	A	Aquastat security	7E549907	
ATW-3WV-01	A	3-way valve (Internal thread and spring return)	7E549906	
ATW-WCV-01	A	Water check valve	9E500014	

Accessory	Ref.	Name	Code	Figure
WEH-6E	M	Water electric heater	90500002	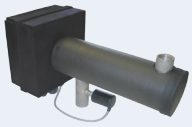
ATW-DPOV-01	A	Differential pressure overflow valve	7E549916	

2. General data

Index

2.1 Capacity tables 17
2.1.1 Nominal capacity-performance tables 17
2.1.1.1 Considerations 17
2.1.1.2 Capacity-performance data 17
2.2 ERP performance data 20
2.2.1 General considerations 20
2.2.2 General ERP data for space heaters 20
2.2.2.1 ERP data - YUTAKI S 20
2.2.2.2 ERP data - YUTAKI S COMBI 22
2.2.2.3 ERP data - YUTAKI M 24
2.2.2.4 ERP additional data - YUTAKI S 26
2.2.2.5 ERP additional data - YUTAKI S COMBI 26
2.2.2.6 ERP additional data - YUTAKI M 26
2.2.3 General ERP data for combi heaters 27
2.2.3.1 YUTAKI S COMBI 27
2.2.4 General ERP data for hot water storage tanks (YUTAKI S & YUTAKI M) 27
2.3 Cooling mode application (EN 14825) (Models with cooling kit accessory) 28
2.3.1 Cooling data (EN 14825) - YUTAKI S 28
2.3.2 Cooling data (EN 14825) - YUTAKI S COMBI 29
2.3.3 Cooling data (EN 14825) - YUTAKI M 34
2.3.4 Additional Cooling data (EN 14825) - YUTAKI S 35
2.3.5 Additional Cooling data (EN 14825) - YUTAKI S COMBI 35
2.3.6 Additional Cooling data (EN 14825) - YUTAKI M 37
2.4 General specifications 38
2.4.1 Considerations 38
2.4.2 Split system - Outdoor unit 39
2.4.3 Split system - Indoor unit 40
2.4.3.1 YUTAKI S 40
2.4.3.2 YUTAKI S COMBI 41
2.4.4 Monobloc system - YUTAKI M 44
2.4.5 Domestic Hot Water Tank 45
2.5 Component data 46
2.5.1 Split system - Outdoor unit 46
2.5.2 Split system - Indoor unit 47
2.5.2.1 YUTAKI S 47
2.5.2.2 YUTAKI S COMBI 48
2.5.3 Monobloc system - YUTAKI M 52
2.6 Electrical data 54

2.6.1 Considerations 54
2.6.2 Split system - Outdoor unit 54
2.6.3 Split system - Indoor unit 54
2.6.3.1 YUTAKI S 54
2.6.3.2 YUTAKI S COMBI 55
2.6.4 Monobloc system - YUTAKI M 55

2.1 Capacity tables

2.1.1 Nominal capacity-performance tables

2.1.1.1 Considerations

- The heating capacity tables show the capacity and performance data in integrated values (with defrost correction factor included).
- The nominal heating and cooling capacities are based on the EN 14511 standard: Piping length: 7.5 meters; Piping lift: 0 meters.

Keywords:

- CAP: Nominal capacity (kW)
- COP: Coefficient of performance
- EER: Energy efficiency ratio
- DB: Dry bulb; WB: Wet bulb (ºC)
- OAT: Outdoor ambient temperature (ºC)
- WIT: Water inlet temperature (ºC)
- WOT: Water outlet temperature (ºC)

2.1.1.2 Capacity-performance data

◆ **YUTAKI S**

HP				2.0 HP	2.5 HP	3.0 HP
Outdoor unit model				RAS-2WHVRP	RAS-2.5WHVRP	RAS-3WHVRP
Indoor unit model				RWM-2.0NRE(-W)	RWM-2.5NRE(-W)	RWM-3.0NRE(-W)
OAT (DB/WB)	WIT / WOT	-	Unit	Heating operation		
7 / 6 ºC	30 / 35 ºC	CAP (Min./Nom./Max.)	kW	1.85 / 4.30 / 6.50	1.85 / 6.00 / 8.60	2.1 / 8.00 / 11.0
		COP (Nom.)	-	5.25	4.80	4.60
	47 / 55 ºC	CAP (Nom./Max.)	kW	4.30 / 6.00	6.00 / 7.50	8.00 / 9.50
		COP (Nom.)	-	3.00	2.85	2.80
-7 / -8 ºC	30 / 35 ºC	CAP (Nom./Max.)	kW	4.50 / 5.30	5.30 / 6.20	5.80 / 7.50
		COP (Nom.)	-	2.8	2.70	2.70
	47 / 55 ºC	CAP (Nom./Max.)	kW	4.00 / 4.20	4.70 / 5.00	5.00 / 5.50
		COP (Nom.)	-	2.00	1.80	1.75

OAT (DB/WB)	WIT / WOT	-	Unit	Cooling operation (Using cooling kit accessory)		
35 / -- ºC	12 / 7 ºC	CAP (Nom/Max)	kW	4.00 / 5.00	5.30 / 6.00	6.50 / 7.00
		EER (Nom.)	-	4.00	3.60	3.35
	23 / 18 ºC	CAP (Nom/Max)	kW	5.50 / 6.40	6.30 / 7.70	7.00 / 9.00
		EER (Nom.)	-	5.40	5.30	5.00

◆ YUTAKI S COMBI

HP				2.0 HP	2.5 HP	3.0 HP
Outdoor unit model				RAS-2WHVRP	RAS-2.5WHVRP	RAS-3WHVRP
Indoor unit model				RWD-2.0NRW(S)E-(200/260)S(-K)(-W)	RWD-2.5NRW(S)E-(200/260)S(-K)(-W)	RWD-3.0NRW(S)E-(200/260)S(-K)(-W)
OAT (DB/WB)	WIT / WOT	-	Unit	Heating operation		
7 / 6 ºC	30 / 35 ºC	CAP (Min./Nom./Max.)	kW	1.85 / 4.30 / 6.50	1.85 / 6.00 / 8.60	2.1 / 8.00 / 11.0
		COP (Nom.)	-	5.25	4.80	4.60
	47 / 55 ºC	CAP (Nom./Max.)	kW	4.30 / 6.00	6.00 / 7.50	8.00 / 9.50
		COP (Nom.)	-	3.00	2.85	2.80
-7 / -8 ºC	30 / 35 ºC	CAP (Nom./Max.)	kW	4.50 / 5.30	5.30 / 6.20	5.80 / 7.50
		COP (Nom.)	-	2.8	2.70	2.70
	47 / 55 ºC	CAP (Nom./Max.)	kW	4.00 / 4.20	4.70 / 5.00	5.00 / 5.50
		COP (Nom.)	-	2.00	1.80	1.75

OAT (DB/WB)	WIT / WOT	-	Unit	Cooling operation (Using cooling kit accessory)		
35 / -- ºC	12 / 7 ºC	CAP (Nom/Max)	kW	4.00 / 5.00	5.30 / 6.00	6.50 / 7.00
		EER (Nom.)	-	4.00	3.60	3.35
	23 / 18 ºC	CAP (Nom/Max)	kW	5.50 / 6.40	6.30 / 7.70	7.00 / 9.00
		EER (Nom.)	-	5.40	5.30	5.00

◆ YUTAKI S COMBI tank performance

HP				2.0 HP	2.5 HP	3.0 HP
Tank	Outdoor unit model			RAS-2WHVRP	RAS-2.5WHVRP	RAS-3WHVRP
	Indoor unit model			RWD-2.0NRW(S)E-(200/260)S(-K)(-W)	RWD-2.5NRW(S)E-(200/260)S(-K)(-W)	RWD-3.0NRW(S)E-(200/260)S(-K)(-W)
200 L	Load profile	-	-	L	L	L
	COP_{dhw}	-	-	3.30	3.30	3.30
	Heating up time	t_h	h:min	1:43	1:43	1:43
	Standby power input	Pes	W	37	37	37
	Mixed water at 40 ºC	Vmax	L	263	263	263
	Reference hot water temperature	θ'wh	ºC	54.00	54.00	54.00
	Efficiency	ηwh	%	132	132	132
	Energy class	-	-	A+	A+	A+
260 L	Load profile	-	-	XL	XL	XL
	COP_{dhw}	-	-	3.40	3.40	3.40
	Heating up time	t_h	h:min	2:20	2:20	2:20
	Standby power input	Pes	W	37	37	37
	Mixed water at 40 ºC	Vmax	L	350	350	350
	Reference hot water temperature	θ'wh	ºC	54.00	54.00	54.00
	Efficiency	ηwh	%	136	136	136
	Energy class	-	-	A+	A+	A+

◆ YUTAKI M

HP				2.0 HP	3.0 HP
Outdoor unit model				RASM-2VRE	RASM-3VRE
OAT (DB/WB)	WIT / WOT	-	Unit	Heating operation	
7 / 6 °C	30 / 35 °C	CAP (Nom./Max.)	kW	1.85 / 4.30 / 6.50	2.1 / 8.00 / 11.0
		COP (Nom.)	-	5.25	4.60
	47 / 55 °C	CAP (Nom./Max.)	kW	4.30 / 6.00	8.00 / 9.50
		COP (Nom.)	-	3.00	2.80
-7 / -8 °C	30 / 35 °C	CAP (Nom./Max.)	kW	4.50 / 5.30	5.80 / 7.50
		COP (Nom.)	-	2.80	2.70
	47 / 55 °C	CAP (Nom./Max.)	kW	4.00 / 4.20	5.00 / 5.50
		COP (Nom.)	-	2.00	1.75

OAT (DB/WB)	WIT / WOT	-	Unit	Cooling operation (Using cooling kit accessory)	
35 / -- °C	12 / 7 °C	CAP (Nom/Max)	kW	4.00 / 5.00	6.50 / 7.00
		EER (Nom.)	-	4.00	3.35
	23 / 18 °C	CAP (Nom/Max)	kW	5.50 / 6.40	7.00 / 9.00
		EER (Nom.)	-	5.40	5.00

2.2 ERP performance data

2.2.1 General considerations

- This appliance must be installed, maintained and dismantled by professionals. Do not pour contained refrigerant into the atmosphere since this refrigerant fluid is a fluorinated greenhouse gas regulated under European Regulation (EU) Nº 517/2014.
- Data with the mark (*) in General ERP data corresponds to the “Energy efficiency contribution (η_S)” due to the use of temperature control.

OTC control (Factory-supplied)		Wired room thermostat (PC-ARFH1E)	7E543002 (*)
		Wireless room thermostat (ATW-RTU-05 / ATW-RTU-07)	7E543004 / 70543015
		Wired room sensor (ATW-ITS-01)	7E549932
Temperature control class	II	Temperature control class	VI
Energy efficiency contribution	+2%	Contribution to the nominal energy efficiency	+4%

(*) Factory supplied in case of YUTAKI S and YUTAKI S COMBI.

- **Data between brackets corresponds only to heating and cooling models (“Cooling kit” accessory needed).**

2.2.2 General ERP data for space heaters

2.2.2.1 ERP data - YUTAKI S

◆ **AVERAGE climate**

RAS-(2-3)WHVRP + RWM-(2.0-3.0)NRE(-W)

Model		HP		2.0 HP		2.5 HP		3.0 HP	
		Outdoor unit		RAS-2WHVRP		RAS-2.5WHVRP		RAS-3WHVRP	
		Indoor unit		RWM-2.0NRE(-W)		RWM-2.5NRE(-W)		RWM-3.0NRE(-W)	
Water outlet temperature				35ºC	55ºC	35ºC	55ºC	35ºC	55ºC
Product description	Air to water heat pump		-	Yes					
	Heat pump combination heater		-	No					
	Low temperature heat pump		-	No					
	Complementary heater		-	Yes					
Design capacity (P_{DESIGN})			kW	4.0	4.0	6.0	5.0	7.0	6.0
Nominal energy efficiency (η_S)			%	181(186)	133 (136)	177 (180)	127 (128)	177(179)	125 (127)
Nominal energy class			-	A+++	A++	A+++	A++	A+++	A++
Data for Packaged Fiche:									
	Energy efficiency with OTC control (η_S) (*)		%	183(188)	135(138)	179 (182)	129(130)	179(181)	127 (129)
	Energy class with OTC control		-	A+++	A++	A+++	A++	A+++	A++
	Energy efficiency with thermostats/sensors (η_S) (*)		%	185(190)	137(140)	181 (184)	131(132)	181(183)	129 (131)
	Energy class with thermostats		-	A+++	A++	A+++	A++	A+++	A++
Supplementary capacity (P_{SUP})			kW	0.0	0.9	0.25	1.1	0.6	1.5
Type of energy used			-	Electricity					
Declared capacity (Pdh) and coefficient of performance (COP_d) at partial load under the following outdoor temperatures:									
	Outdoor temperature (Tj) = -7ºC	Pdh	kW	3.54	3.50	5.10	4.42	5.90	5.10
		COP_d	-	3.20	2.13	2.70	1.85	2.65	1.84
	Outdoor temperature (Tj) = +2ºC	Pdh	kW	2.35	2.10	3.10	2.69	3.59	3.10
		COP_d	-	4.80	3.35	4.60	3.30	4.30	3.10
	Outdoor temperature (Tj) = +7ºC	Pdh	kW	3.00	2.43	3.00	2.43	3.20	2.00
		COP_d	-	6.20	5.15	6.20	4.60	7.00	4.65
	Outdoor temperature (Tj) = +12ºC	Pdh	kW	3.05	2.80	3.05	2.80	3.50	2.20
		COP_d	-	8.30	6.80	8.35	6.35	9.70	6.55
	Outdoor temperature (Tj) = Bivalent temperature (T_{biv})	Pdh	kW	3.54	3.50	5.10	4.42	5.90	5.10
		COP_d	-	3.20	2.13	2.70	1.85	2.65	1.84
	Outdoor temperature (Tj) = Limit operation temperature (TOL)	Pdh	kW	4.00	3.10	5.30	3.90	6.40	5.00
		COP_d	-	2.75	1.90	2.50	1.70	2.30	1.50
Bivalent temperature (T_{biv})			ºC	-7	-7	-7	-7	-7	-7
Limit operation temperature (TOL)			ºC	-10	-10	-10	-10	-10	-10
Water limit operation temperature (WTOL)			ºC	55	55	55	55	55	55
Degradation coefficient (Cdh)			-	0.9	0.9	0.9	0.9	0.9	0.9
Annual energy consumption (Q_{HE})			kW·h	1798 (1754)	2401 (2357)	2652 (2608)	3186 (3143)	3068 (3024)	3724 (3680)

◆ WARMER climate

RAS-(2-3)WHVRP + RWM-(2.0-3.0)NRE(-W)

Model	HP		2.0 HP	2.5 HP	3.0 HP
	Outdoor unit		RAS-2WHVRP	RAS-2.5WHVRP	RAS-3WHVRP
	Indoor unit		RWM-2.0NRE(-W)	RWM-2.5NRE(-W)	RWM-3.0NRE(-W)
Design capacity (P_{DESIGN})		kW	4.0	5.0	6.0
(1) Nominal energy efficiency (η_S)		%	185 (194)	182 (189)	170 (175)
Data for Packaged Fiche:					
	(2) Energy efficiency with OTC control (η_S) (*)	%	187 (196)	184 (191)	172 (177)
	(3) Energy efficiency with thermostats (η_S) (*)	%	189 (198)	186 (193)	174 (177)
Annual energy consumption (Q_{HE})		kW·h	1136 (1084)	1441 (1389)	1857 (1804)

◆ COLDER climate

RAS-(2-3)WHVRP + RWM-(2.0-3.0)NRE(-W)

Model	HP		2.0 HP	2.5 HP	3.0 HP
	Outdoor unit		RAS-2WHVRP	RAS-2.5WHVRP	RAS-3WHVRP
	Indoor unit		RWM-2.0NRE(-W)	RWM-2.5NRE(-W)	RWM-3.0NRE(-W)
Design capacity (P_{DESIGN})		kW	4.0	5.0	6.0
(1) Nominal energy efficiency (η_S)		%	123 (125)	122 (123)	118 (118)
Data for Packaged Fiche:					
	(2) Energy efficiency with OTC control (η_S) (*)	%	125 (127)	124(125)	120 (120)
	(3) Energy efficiency with thermostats (η_S) (*)	%	127 (129)	126 (127)	122 (122)
Annual energy consumption (Q_{HE})		kW·h	3058 (3031)	4047 (4021)	4910 (4884)

2.2.2.2 ERP data - YUTAKI S COMBI

◆ **AVERAGE climate**

RAS-(2-3)WHVRP + RWD-(2.0-3.0)NRW(S)E-(200/260)S(-K)(-W)

Model			HP	2.0 HP		2.5 HP		3.0 HP	
			Outdoor unit	RAS-2WHVRP		RAS-2.5WHVRP		RAS-3WHVRP	
			Indoor unit	RWD-2.0NRW(S)E-(200/260)S(-K)(-W)		RWD-2.5NRW(S)E-(200/260)S(-K)(-W)		RWD-3.0NRW(S)E-(200/260)S(-K)(-W)	
Water outlet temperature				35ºC	55ºC	35ºC	55ºC	35ºC	55ºC
Product description	Air to water heat pump		-	Yes					
	Heat pump combination heater		-	No					
	Low temperature heat pump		-	No					
	Complementary heater		-	Yes					
Design capacity (P_{DESIGN})			kW	4.0	4.0	6.0	5.0	7.0	6.0
Nominal energy efficiency (η_S)			%	181(186)	133 (136)	177 (180)	127 (128)	177(179)	125 (127)
Nominal energy class			-	A+++	A++	A+++	A++	A+++	A++
Data for Packaged Fiche:									
	Energy efficiency with OTC control (η_S) (*)		%	183(188)	135(138)	179 (182)	129(130)	179(181)	127 (129)
	Energy class with OTC control		-	A+++	A++	A+++	A++	A+++	A++
	Energy efficiency with thermostats/sensors (η_S) (*)		%	185(190)	137(140)	181 (184)	131(132)	181(183)	129 (131)
	Energy class with thermostats		-	A+++	A++	A+++	A++	A+++	A++
Supplementary capacity (P_{SUP})			kW	0.0	0.9	0.25	1.1	0.6	1.5
Type of energy used			-	Electricity					
Declared capacity (Pdh) and coefficient of performance (COP_d) at partial load under the following outdoor temperatures:									
	Outdoor temperature (Tj) = -7ºC	Pdh	kW	3.54	3.50	5.10	4.42	5.90	5.10
		COP_d	-	3.20	2.13	2.70	1.85	2.65	1.84
	Outdoor temperature (Tj) = +2ºC	Pdh	kW	2.35	2.10	3.10	2.69	3.59	3.10
		COP_d	-	4.80	3.35	4.60	3.30	4.30	3.10
	Outdoor temperature (Tj) = +7ºC	Pdh	kW	3.00	2.43	3.00	2.43	3.20	2.00
		COP_d	-	6.20	5.15	6.20	4.60	7.00	4.65
	Outdoor temperature (Tj) = +12ºC	Pdh	kW	3.05	2.80	3.05	2.80	3.50	2.20
		COP_d	-	8.30	6.80	8.35	6.35	9.70	6.55
	Outdoor temperature (Tj) = Bivalent temperature (T_{biv})	Pdh	kW	3.54	3.50	5.10	4.42	5.90	5.10
		COP_d	-	3.20	2.13	2.70	1.85	2.65	1.84
	Outdoor temperature (Tj) = Limit operation temperature (TOL)	Pdh	kW	4.00	3.10	5.30	3.90	6.40	5.00
		COP_d	-	2.75	1.90	2.50	1.70	2.30	1.50
Bivalent temperature (T_{biv})			ºC	-7	-7	-7	-7	-7	-7
Limit operation temperature (TOL)			ºC	-10	-10	-10	-10	-10	-10
Water limit operation temperature (WTOL)			ºC	55	55	55	55	55	55
Degradation coefficient (Cdh)			-	0.9	0.9	0.9	0.9	0.9	0.9
Annual energy consumption (Q_{HE})			kW·h	1798 (1754)	2401 (2357)	2652 (2608)	3186 (3143)	3068 (3024)	3724 (3680)

◆ WARMER climate

RAS-(2-3)WHVRP + RWD-(2.0-3.0)NRW(S)E-(200/260)S(-K)(-W)

Model	HP	2.0 HP	2.5 HP	3.0 HP
	Outdoor unit	RAS-2WHVRP	RAS-2.5WHVRP	RAS-3WHVRP
	Indoor unit	RWD-2.0NRW(S)E-(200/260)S(-K)(-W)	RWD-2.5NRW(S)E-(200/260)S(-K)(-W)	RWD-3.0NRW(S)E-(200/260)S(-K)(-W)
Design capacity (P_{DESIGN})	kW	4.0	5.0	6.0
(1) Nominal energy efficiency (η_S)	%	185 (194)	182 (189)	170 (175)
Data for Packaged Fiche:				
(2) Energy efficiency with OTC control (η_S) (*)	%	187 (196)	184 (191)	172 (177)
(3) Energy efficiency with thermostats (η_S) (*)	%	189 (198)	186 (193)	174 (177)
Annual energy consumption (Q_{HE})	kW·h	1136 (1084)	1441 (1389)	1857 (1804)

◆ COLDER climate

RAS-(2-3)WHVRP + RWD-(2.0-3.0)NRW(S)E-(200/260)S(-K)(-W)

Model	HP	2.0 HP	2.5 HP	3.0 HP
	Outdoor unit	RAS-2WHVRP	RAS-2.5WHVRP	RAS-3WHVRP
	Indoor unit	RWD-2.0NRW(S)E-(200/260)S(-K)(-W)	RWD-2.5NRW(S)E-(200/260)S(-K)(-W)	RWD-3.0NRW(S)E-(200/260)S(-K)(-W)
Design capacity (P_{DESIGN})	kW	4.0	5.0	6.0
(1) Nominal energy efficiency (η_S)	%	123 (125)	122 (123)	118 (118)
Data for Packaged Fiche:				
(2) Energy efficiency with OTC control (η_S) (*)	%	125 (127)	124(125)	120 (120)
(3) Energy efficiency with thermostats (η_S) (*)	%	127 (129)	126 (127)	122 (122)
Annual energy consumption (Q_{HE})	kW·h	3058 (3031)	4047 (4021)	4910 (4884)

2.2.2.3 ERP data - YUTAKI M

◆ **AVERAGE climate**

RASM-(2-3)VRE

HP			2.0 HP		3.0 HP	
Model			RASM-2VRE		RASM-3VRE	
Water outlet temperature			35ºC	55ºC	35ºC	55ºC
Product description	Air to water heat pump	-	Yes			
	Heat pump combination heater	-	No			
	Low temperature heat pump	-	No			
	Complementary heater	-	No			
Design capacity (P_{DESIGN})		kW	4.0	4.0	7.0	6.0
Nominal energy efficiency (η_S)		%	181(186)	133 (136)	177(179)	125 (127)
Nominal energy class		-	A+++	A++	A+++	A++
Data for Packaged Fiche:						
Energy efficiency with OTC control (η_S) (*)		%	183(188)	135(138)	179(181)	127 (129)
Energy class with OTC control		-	A+++	A++	A+++	A++
Energy efficiency with thermostats (η_S) (*)		%	185(190)	137(140)	181(183)	129 (131)
Energy class with thermostats		-	A+++	A++	A+++	A++
Supplementary capacity (P_{SUP})		kW	0.0	0.9	0.6	1.5
Type of energy used		-	Electricity			
Declared capacity (Pdh) and coefficient of performance (COP_d) at partial load under the following outdoor temperatures:						
Outdoor temperature (Tj) = -7ºC	Pdh	kW	3.54	3.50	5.90	5.10
	COP_d	-	3.20	2.13	2.65	1.84
Outdoor temperature (Tj) = +2ºC	Pdh	kW	2.35	2.10	3.59	3.10
	COP_d	-	4.80	3.35	4.30	3.10
Outdoor temperature (Tj) = +7ºC	Pdh	kW	3.00	2.43	3.20	2.00
	COP_d	-	6.20	5.15	7.00	4.65
Outdoor temperature (Tj) = +12ºC	Pdh	kW	3.05	2.80	3.50	2.20
	COP_d	-	8.30	6.80	9.70	6.55
Outdoor temperature (Tj) = Bivalent temperature (T_{biv})	Pdh	kW	3.54	3.50	5.90	5.10
	COP_d	-	3.20	2.13	2.65	1.84
Outdoor temperature (Tj) = Limit operation temperature (T_{OL})	Pdh	kW	4.00	3.10	6.40	5.00
	COP_d	-	2.75	1.90	2.30	1.50
Bivalent temperature (T_{biv})		ºC	-7	-7	-7	-7
Limit operation temperature (TOL)		ºC	-10	-10	-10	-10
Water limit operation temperature (WTOL)		ºC	55	55	55	55
Degradation coefficient (Cdh)		-	0.9	0.9	0.9	0.9
Annual energy consumption (Q_{HE})		kW·h	1798 (1754)	2401 (2357)	3068 (3024)	3724 (3680)

◆ WARMER climate

RASM-(2-3)VRE

Model		HP	2.0 HP	3.0 HP
		Outdoor unit	RASM-2VRE	RASM-3VRE
Design capacity (P_{DESIGN})		kW	4.0	6.0
(1) Nominal energy efficiency (η_S)		%	185 (194)	170 (175)
Data for Packaged Fiche:				
	(2) Energy efficiency with OTC control (η_S) (*)	%	187 (196)	172 (177)
	(3) Energy efficiency with thermostats (η_S) (*)	%	189 (198)	174 (177)
Annual energy consumption (Q_{HE})		kW·h	1136 (1084)	1857 (1804)

◆ COLDER climate

RASM-(2-3)VRE

Model		HP	2.0 HP	3.0 HP
		Outdoor unit	RASM-2VRE	RASM-3VRE
Design capacity (P_{DESIGN})		kW	4.0	6.0
(1) Nominal energy efficiency (η_S)		%	123 (125)	118 (118)
Data for Packaged Fiche:				
	(2) Energy efficiency with OTC control (η_S) (*)	%	125 (127)	120 (120)
	(3) Energy efficiency with thermostats (η_S) (*)	%	127 (129)	122 (122)
Annual energy consumption (Q_{HE})		kW·h	3058 (3031)	4910 (4884)

2.2.2.4 ERP additional data - YUTAKI S

RAS-(2-3)WHVRP + RWM-(2.0-3.0)NRE(-W)

Model	HP	2.0 HP	2.5 HP	3.0 HP
	Outdoor unit	RAS-2WHVRP	RAS-2.5WHVRP	RAS-3WHVRP
	Indoor unit	RWM-2.0NRE(-W)	RWM-2.5NRE(-W)	RWM-3.0NRE(-W)
Electrical power input in stand-by mode (Psb)	W	11.9	11.9	11.9
Electrical power input in thermostat-OFF mode (Pto)	W	0.0	0.0	0.0
Electrical power input in OFF mode (Poff)	W	11.9	11.9	11.9
Electrical power input in crankcase heater mode (Pck)	W	0.0	0.0	0.0
Sound power level of indoor unit (L_{WA})	dB(A)	37	37	37
Capacity control mode	-	Variable (Inverter)		
Integrated supplementary heater	kW	3.0	3.0	3.0
Nominal outdoor air flow	m^3/h	2436	2436	2682

2.2.2.5 ERP additional data - YUTAKI S COMBI

RAS-(2-3)WHVRP + RWD-(2.0-3.0)NRW(S)E-(200/260)S(-K)(-W)

Model	HP	2.0 HP	2.5 HP	3.0 HP
	Outdoor unit	RAS-2WHVRP	RAS-2.5WHVRP	RAS-3WHVRP
	Indoor unit	RWD-2.0NRW(S)E (200/260)S(-K)(-W)	RWD-2.5NRW(S)E (200/260)S(-K)(-W)	RWD-3.0NRW(S)E (200/260)S(-K)(-W)
Electrical power input in stand-by mode (Psb)	W	11.9	11.9	11.9
Electrical power input in thermostat-OFF mode (Pto)	W	0.0	0.0	0.0
Electrical power input in OFF mode (Poff)	W	11.9	11.9	11.9
Electrical power input in crankcase heater mode (Pck)	W	0.0	0.0	0.0
Sound power level of indoor unit (L_{WA})	dB(A)	37	37	37
Capacity control mode	-	Variable (Inverter)		
Integrated supplementary heater	kW	3.0	3.0	3.0
Nominal outdoor air flow	m^3/h	2436	2436	2682

2.2.2.6 ERP additional data - YUTAKI M

RASM-(2-3)VRE

Model	HP	2.0 HP	3.0 HP
		RASM-2VRE	RASM-3VRE
Electrical power input in stand-by mode (Psb)	W	11.9	11.9
Electrical power input in thermostat-OFF mode (Pto)	W	0.0	0.0
Electrical power input in OFF mode (Poff)	W	11.9	11.9
Electrical power input in crankcase heater mode (Pck)	W	0.0	0.0
Sound power level of outdoor unit (L_{WA})	dB(A)	61	69
Capacity control mode	-	Variable (Inverter)	
Integrated supplementary heater	kW	No	
Nominal outdoor air flow	m^3/h	2436	2682

2.2.3 General ERP data for combi heaters

2.2.3.1 YUTAKI S COMBI

RAS-(2-3)WH(V)NP + RWD-(2.0-3.0)NRW(S)E-(200/260)S(-K)(-W)

Model		HP	2.0 HP		2.5 HP		3.0 HP	
		Outdoor unit	RAS-2WHVRP		RAS-2.5WHVRP		RAS-3WHVRP	
		Indoor unit	RWD-2.0 NRWE-200S(-K) (-W)	RWD-2.0NRW(S)E-260S(-K) (-W)	RWD-2.5 NRWE-200S(-K) (-W)	RWD-2.5 NRW(S)E-260S(-K) (-W)	RWD-3.0 NRWE-200S-(K) (-W)	RWD-3.0 NRW(S)E-260S(-K) (-W)
Declared profile		-	L	XL	L	XL	L	XL
Ability to work during OFF peak hours		-	Yes					
AVERAGE climate								
Water heating energy efficiency (η_{wh})		%	132	136	132	136	132	136
Water heating energy class		-	A+	A+	A+	A+	A+	A+
Daily electricity consumption		kW·h	3.53	5.61	3.53	5.61	3.53	5.61
Annual energy consumption		kW·h	777	1234	777	1234	777	1234
WARMER climate								
Water heating energy efficiency (η_{wh})		%	145	150	145	150	145	150
Daily energy consumption		kW·h	3.21	3.12	3.21	706	3.21	706
Annual energy consumption		kW·h	706	686	3.12	686	3.12	686
COLDER climate								
Water heating energy efficiency (η_{wh})		%	112	116	112	116	112	116
Daily energy consumption		kW·h	4.16	4.03	4.16	4.03	4.16	4.03
Annual energy consumption		kW·h	914	887	914	887	914	887

2.2.4 General ERP data for hot water storage tanks (YUTAKI S & YUTAKI M)

Model		DHWT-200S-3.0H2E	DHWT-300S-3.0H2E
Storage volume	L	194	264
Standing loss	W	47.3	62.8
Energy efficiency class	-	B	B

2.3 Cooling mode application (EN 14825) (Models with cooling kit accessory)

2.3.1 Cooling data (EN 14825) - YUTAKI S

Model		Outdoor unit		RAS-2WHVRP		RAS-2.5WHVRP		RAS-3WHVRP	
		Indoor unit		RWM-2.0NRE(-W)		RWM-2.5NRE(-W)		RWM-3.0NRE(-W)	
Water outlet temperature				7ºC	18ºC	7ºC	18ºC	7ºC	18ºC
Product description	Outdoor side heat exchanger of chiller		-	Air to Water		Air to Water		Air to Water	
	Indoor side heat exchanger chiller		-	Water		Water		Water	
	Type		-	Compressor driven vapour compression		Compressor driven vapour compression		Compressor driven vapour compression	
	Driver of compressor		-	Electric motor		Electric motor		Electric motor	
	Capacity Control			Variable		Variable		Variable	
	Water control			Fixed		Fixed		Fixed	
Rated Cooling Capacity (PRATED,C)			kW	4.00	5.50	5.3	6.30	6.5	7.0
Seasonal space cooling energy efficiency (ηS,C)			%	220	319	218	338	208	331
Seasonal energy efficiency ratio cooling mode (SEER)			-	5.57	8.04	5.53	8.50	5.27	8.35
Seasonal active energy ratio cooling mode (SEERON)			-	5.79	8.38	5.69	8.53	5.39	8.64
Declared cooling capacity and efficiency ratio for part load at given outdoor temperatures Tj									
	Outdoor temperature (Tj) = 35ºC	Pdc	kW	4.00	5.50	5.30	6.30	6.50	7.00
		EERd	-	4.00	5.40	3.60	5.30	3.35	5.00
	Outdoor temperature (Tj) = 30ºC	Pdc	kW	2.95	4.05	3.91	4.64	4.79	5.16
		EERd	-	5.00	7.20	4.50	7.00	4.50	6.40
	Outdoor temperature (Tj) = 25ºC	Pdc	kW	2.05	2.61	2.51	2.98	2.90	3.32
		EERd	-	6.45	9.60	6.30	9.90	6.00	10.0
	Outdoor temperature (Tj) = 20ºC	Pdc	kW	2.88	2.51	2.88	2.65	3.40	3.60
		EERd	-	8.00	10.3	8.56	12.61	7.50	13.5
Degradation coefficient (Cdc)			-	0.9	0.9	0.9	0.9	0.9	0.9
Annual energy consumption (QCE)			kW·h	431	410	575	337	740	503

2.3.2 Cooling data (EN 14825) - YUTAKI S COMBI

Model		Outdoor unit		RAS-2WHVRP		RAS-2.5WHVRP		RAS-3WHVRP	
		Indoor unit		RWD-2.0NRWE-200S(-W)		RWD-2.5NRWE-200S(-W)		RWD-3.0NRWE-200S(-W)	
Water outlet temperature				7ºC	18ºC	7ºC	18ºC	7ºC	18ºC
Product description	Outdoor side heat exchanger of chiller		-	Air to Water		Air to Water		Air to Water	
	Indoor side heat exchanger chiller		-	Water		Water		Water	
	Type		-	Compressor driven vapour compression		Compressor driven vapour compression		Compressor driven vapour compression	
	Driver of compressor		-	Electric motor		Electric motor		Electric motor	
	Capacity Control			Variable		Variable		Variable	
	Water control			Fixed		Fixed		Fixed	
Rated Cooling Capacity (PRATED,C)			kW	4.00	5.50	5.3	6.30	6.5	7.0
Seasonal space cooling energy efficiency (ηS,C)			%	220	319	218	338	208	331
Seasonal energy ratio cooling mode (SEER)			-	5.57	8.04	5.53	8.50	5.27	8.35
Seasonal active energy ratio cooling mode (SEERON)			-	5.79	8.38	5.69	8.53	5.39	8.64
Declared cooling capacity and efficiency ratio for part load at given outdoor temperatures Tj									
	Outdoor temperature (Tj) = 35ºC	Pdc	kW	4.00	5.50	5.30	6.30	6.50	7.00
		EERd	-	4.00	5.40	3.60	5.30	3.35	5.00
	Outdoor temperature (Tj) = 30ºC	Pdc	kW	2.95	4.05	3.91	4.64	4.79	5.16
		EERd	-	5.00	7.20	4.50	7.00	4.50	6.40
	Outdoor temperature (Tj) = 25ºC	Pdc	kW	2.05	2.61	2.51	2.98	2.90	3.32
		EERd	-	6.45	9.60	6.30	9.90	6.00	10.0
	Outdoor temperature (Tj) = 20ºC	Pdc	kW	2.88	2.51	2.88	2.65	3.40	3.60
		EERd	-	8.00	10.3	8.56	12.61	7.50	13.5
Degradation coefficient (Cdc)			-	0.9	0.9	0.9	0.9	0.9	0.9
Annual energy consumption (QCE)			kW·h	431	410	575	337	740	503

Model		Outdoor unit		RAS-2WHVRP		RAS-2.5WHVRP		RAS-3WHVRP	
		Indoor unit		RWD-2.0NRWE-260S(-W)		RWD-2.5NRWE-260S(-W)		RWD-3.0NRWE-260S(-W)	
Water outlet temperature				7ºC	18ºC	7ºC	18ºC	7ºC	18ºC
Product description	Outdoor side heat exchanger of chiller		-	Air to Water		Air to Water		Air to Water	
	Indoor side heat exchanger chiller		-	Water		Water		Water	
	Type		-	Compressor driven vapour compression		Compressor driven vapour compression		Compressor driven vapour compression	
	Driver of compressor		-	Electric motor		Electric motor		Electric motor	
	Capacity Control			Variable		Variable		Variable	
	Water control			Fixed		Fixed		Fixed	
Rated Cooling Capacity (PRATED,C)			kW	4.00	5.50	5.3	6.30	6.5	7.0
Seasonal space cooling energy efficiency (ηS,C)			%	220	319	218	338	208	331
Seasonal energy ratio cooling mode (SEER)			-	5.57	8.04	5.53	8.50	5.27	8.35
Seasonal active energy ratio cooling mode (SEERON)			-	5.79	8.38	5.69	8.53	5.39	8.64
Declared cooling capacity and efficiency ratio for part load at given outdoor temperatures Tj									
	Outdoor temperature (Tj) = 35ºC	Pdc	kW	4.00	5.50	5.30	6.30	6.50	7.00
		EERd	-	4.00	5.40	3.60	5.30	3.35	5.00
	Outdoor temperature (Tj) = 30ºC	Pdc	kW	2.95	4.05	3.91	4.64	4.79	5.16
		EERd	-	5.00	7.20	4.50	7.00	4.50	6.40
	Outdoor temperature (Tj) = 25ºC	Pdc	kW	2.05	2.61	2.51	2.98	2.90	3.32
		EERd	-	6.45	9.60	6.30	9.90	6.00	10.0
	Outdoor temperature (Tj) = 20ºC	Pdc	kW	2.88	2.51	2.88	2.65	3.40	3.60
		EERd	-	8.00	10.3	8.56	12.61	7.50	13.5
Degradation coefficient (Cdc)			-	0.9	0.9	0.9	0.9	0.9	0.9
Annual energy consumption (QCE)			kW·h	431	410	575	337	740	503

Model		Outdoor unit		RAS-2WHVRP		RAS-2.5WHVRP		RAS-3WHVRP	
		Indoor unit		RWD-2.0NRWSE-260S(-W)		RWD-2.5NRWSE-260S(-W)		RWD-3.0NRWSE-260S(-W)	
Water outlet temperature				7ºC	18ºC	7ºC	18ºC	7ºC	18ºC
Product description	Outdoor side heat exchanger of chiller		-	Air to Water		Air to Water		Air to Water	
	Indoor side heat exchanger chiller		-	Water		Water		Water	
	Type		-	Compressor driven vapour compression		Compressor driven vapour compression		Compressor driven vapour compression	
	Driver of compressor		-	Electric motor		Electric motor		Electric motor	
	Capacity Control			Variable		Variable		Variable	
	Water control			Fixed		Fixed		Fixed	
Rated Cooling Capacity (PRATED,C)			kW	4.00	5.50	5.3	6.30	6.5	7.0
Seasonal space cooling energy efficiency (ηS,C)			%	220	319	218	338	208	331
Seasonal energy ratio cooling mode (SEER)			-	5.57	8.04	5.53	8.50	5.27	8.35
Seasonal active energy ratio cooling mode (SEERON)			-	5.79	8.38	5.69	8.53	5.39	8.64
Declared cooling capacity and efficiency ratio for part load at given outdoor temperatures Tj									
	Outdoor temperature (Tj) = 35ºC	Pdc	kW	4.00	5.50	5.30	6.30	6.50	7.00
		EERd	-	4.00	5.40	3.60	5.30	3.35	5.00
	Outdoor temperature (Tj) = 30ºC	Pdc	kW	2.95	4.05	3.91	4.64	4.79	5.16
		EERd	-	5.00	7.20	4.50	7.00	4.50	6.40
	Outdoor temperature (Tj) = 25ºC	Pdc	kW	2.05	2.61	2.51	2.98	2.90	3.32
		EERd	-	6.45	9.60	6.30	9.90	6.00	10.0
	Outdoor temperature (Tj) = 20ºC	Pdc	kW	2.88	2.51	2.88	2.65	3.40	3.60
		EERd	-	8.00	10.3	8.56	12.61	7.50	13.5
Degradation coefficient (Cdc)			-	0.9	0.9	0.9	0.9	0.9	0.9
Annual energy consumption (QCE)			kW·h	431	410	575	337	740	503

Model		Outdoor unit		RAS-2WHVRP		RAS-2.5WHVRP		RAS-3WHVRP	
		Indoor unit		RWD-2.0NRWE-200S-K		RWD-2.5NRWE-200S-K		RWD-3.0NRWE-200S-K	
Water outlet temperature				7ºC	18ºC	7ºC	18ºC	7ºC	18ºC
Product description	Outdoor side heat exchanger of chiller		-	Air to Water		Air to Water		Air to Water	
	Indoor side heat exchanger chiller		-	Water		Water		Water	
	Type		-	Compressor driven vapour compression		Compressor driven vapour compression		Compressor driven vapour compression	
	Driver of compressor		-	Electric motor		Electric motor		Electric motor	
	Capacity Control			Variable		Variable		Variable	
	Water control			Fixed		Fixed		Fixed	
Rated Cooling Capacity (PRATED,C)			kW	4.00	5.50	5.3	6.30	6.5	7.0
Seasonal space cooling energy efficiency (ηS,C)			%	220	319	218	338	208	331
Seasonal energy ratio cooling mode (SEER)			-	5.57	8.04	5.53	8.50	5.27	8.35
Seasonal active energy ratio cooling mode (SEERON)			-	5.79	8.38	5.69	8.53	5.39	8.64
Declared cooling capacity and efficiency ratio for part load at given outdoor temperatures Tj									
	Outdoor temperature (Tj) = 35ºC	Pdc	kW	4.00	5.50	5.30	6.30	6.50	7.00
		EERd	-	4.00	5.40	3.60	5.30	3.35	5.00
	Outdoor temperature (Tj) = 30ºC	Pdc	kW	2.95	4.05	3.91	4.64	4.79	5.16
		EERd	-	5.00	7.20	4.50	7.00	4.50	6.40
	Outdoor temperature (Tj) = 25ºC	Pdc	kW	2.05	2.61	2.51	2.98	2.90	3.32
		EERd	-	6.45	9.60	6.30	9.90	6.00	10.0
	Outdoor temperature (Tj) = 20ºC	Pdc	kW	2.88	2.51	2.88	2.65	3.40	3.60
		EERd	-	8.00	10.3	8.56	12.61	7.50	13.5
Degradation coefficient (Cdc)			-	0.9	0.9	0.9	0.9	0.9	0.9
Annual energy consumption (QCE)			kW·h	431	410	575	337	740	503

Model		Outdoor unit		RAS-2WHVRP		RAS-2.5WHVRP		RAS-3WHVRP	
		Indoor unit		RWD-2.0NRWE-260S-K		RWD-2.5NRWE-260S-K		RWD-3.0NRWE-260S-K	
Water outlet temperature				7ºC	18ºC	7ºC	18ºC	7ºC	18ºC
Product description	Outdoor side heat exchanger of chiller		-	Air to Water		Air to Water		Air to Water	
	Indoor side heat exchanger chiller		-	Water		Water		Water	
	Type		-	Compressor driven vapour compression		Compressor driven vapour compression		Compressor driven vapour compression	
	Driver of compressor		-	Electric motor		Electric motor		Electric motor	
	Capacity Control			Variable		Variable		Variable	
	Water control			Fixed		Fixed		Fixed	
Rated Cooling Capacity (PRATED,C)			kW	4.00	5.50	5.3	6.30	6.5	7.0
Seasonal space cooling energy efficiency (ηS,C)			%	220	319	218	338	208	331
Seasonal energy ratio cooling mode (SEER)			-	5.57	8.04	5.53	8.50	5.27	8.35
Seasonal active energy ratio cooling mode (SEERON)			-	5.79	8.38	5.69	8.53	5.39	8.64
Declared cooling capacity and efficiency ratio for part load at given outdoor temperatures Tj									
	Outdoor temperature (Tj) = 35ºC	Pdc	kW	4.00	5.50	5.30	6.30	6.50	7.00
		EERd	-	4.00	5.40	3.60	5.30	3.35	5.00
	Outdoor temperature (Tj) = 30ºC	Pdc	kW	2.95	4.05	3.91	4.64	4.79	5.16
		EERd	-	5.00	7.20	4.50	7.00	4.50	6.40
	Outdoor temperature (Tj) = 25ºC	Pdc	kW	2.05	2.61	2.51	2.98	2.90	3.32
		EERd	-	6.45	9.60	6.30	9.90	6.00	10.0
	Outdoor temperature (Tj) = 20ºC	Pdc	kW	2.88	2.51	2.88	2.65	3.40	3.60
		EERd	-	8.00	10.3	8.56	12.61	7.50	13.5
Degradation coefficient (Cdc)			-	0.9	0.9	0.9	0.9	0.9	0.9
Annual energy consumption (QCE)			kW·h	431	410	575	337	740	503

2.3.3 Cooling data (EN 14825) - YUTAKI M

Model		Outdoor unit		RASM-2VRE		RASM-3VNRE	
Water outlet temperature				7ºC	18ºC	7ºC	18ºC
Product description	Outdoor side heat exchanger of chiller		-	Air to Water		Air to Water	
	Indoor side heat exchanger chiller		-	Water		Water	
	Type		-	Compressor driven vapour compression		Compressor driven vapour compression	
	Driver of compressor		-	Electric motor		Electric motor	
	Capacity Control			Variable		Variable	
	Water control			Fixed		Fixed	
Rated Cooling Capacity (PRATED,C)			kW	4.00	5.50	6.50	7.00
Seasonal space cooling energy efficiency (ηS,C)			%	220	319	208	331
Seasonal energy ratio cooling mode (SEER)			-	5.57	8.04	5.27	8.35
Seasonal active energy ratio cooling mode (SEERON)			-	5.79	8.38	5.39	8.64
Declared cooling capacity and efficiency ratio for part load at given outdoor temperatures Tj							
	Outdoor temperature (Tj) = 35ºC	Pdc	kW	4.00	5.50	6.50	7.00
		EERd	-	4.00	5.40	3.35	5.00
	Outdoor temperature (Tj) = 30ºC	Pdc	kW	2.95	4.05	4.79	5.16
		EERd	-	5.00	7.20	4.50	6.40
	Outdoor temperature (Tj) = 25ºC	Pdc	kW	2.05	2.61	2.90	3.32
		EERd	-	6.45	9.60	6.00	10.0
	Outdoor temperature (Tj) = 20ºC	Pdc	kW	2.88	2.51	3.40	3.60
		EERd	-	8.00	10.3	7.50	13.5
Degradation coefficient (Cdc)			-	0.9	0.9	0.9	0.9
Annual energy consumption (QCE)			kW·h	431	410	740	503

2.3.4 Additional Cooling data (EN 14825) - YUTAKI S

Model	Outdoor unit	RAS-2WHVRP	RAS-2.5WHVRP	RAS-3WHVRP
	Indoor unit	RWM-2.0NRE(-W)	RWM-2.5NRE(-W)	RWM-3.0NRE(-W)
Electrical power input in stand-by mode cooling mode (Psb)	W	11.9	11.9	11.9
Electrical power input in thermostat-OFF cooling mode (Pto)	W	0	0	0
Electrical power input in OFF mode (Poff)	W	11.9	11.9	11.9
Electrical power input in crankcase heater in cooling mode (Pck)	W	0	0	0
Sound power level of indoor unit (LWA)	dB(A)	37	37	37
Sound power level of outdoor unit (LWA)	dB(A)	61	63	64
Capacity control mode	-	Variable (Inverter)	Variable (Inverter)	Variable (Inverter)
Nominal outdoor air flow	m^3/h	2436	2436	2682

2.3.5 Additional Cooling data (EN 14825) - YUTAKI S COMBI

Model	Outdoor unit	RAS-2WHVRP	RAS-2.5WHVRP	RAS-3WHVRP
	Indoor unit	RWD-2.0NRWE-200S(-W)	RWD-2.5NRWE-200S(-W)	RWD-3.0NRWE-200S(-W)
Electrical power input in stand-by mode cooling mode (Psb)	W	11.9	11.9	11.9
Electrical power input in thermostat-OFF cooling mode (Pto)	W	0	0	0
Electrical power input in OFF mode (Poff)	W	11.9	11.9	11.9
Electrical power input in crankcase heater in cooling mode (Pck)	W	0	0	0
Sound power level of indoor unit (LWA)	dB(A)	37	37	37
Sound power level of outdoor unit (LWA)	dB(A)	61	63	64
Capacity control mode	-	Variable (Inverter)	Variable (Inverter)	Variable (Inverter)
Nominal outdoor air flow	m^3/h	2436	2436	2682

Model	Outdoor unit	RAS-2WHVRP	RAS-2.5WHVRP	RAS-3WHVRP
	Indoor unit	RWD-2.0NRWE-260S	RWD-2.5NRWE-260S	RWD-3.0NRWE-260S
Electrical power input in stand-by mode cooling mode (Psb)	W	11.9	11.9	11.9
Electrical power input in thermostat-OFF cooling mode (Pto)	W	0	0	0
Electrical power input in OFF mode (Poff)	W	11.9	11.9	11.9
Electrical power input in crankcase heater in cooling mode (Pck)	W	0	0	0
Sound power level of indoor unit (LWA)	dB(A)	37	37	37
Sound power level of outdoor unit (LWA)	dB(A)	61	63	64
Capacity control mode	-	Variable (Inverter)	Variable (Inverter)	Variable (Inverter)
Nominal outdoor air flow	m^3/h	2436	2436	2682

Model	Outdoor unit	RAS-2WHVRP	RAS-2.5WHVRP	RAS-3WHVRP
	Indoor unit	RWD-2.0NRWSE-260S(-W)	RWD-2.5NRWSE-260S(-W)	RWD-3.0NRWSE-260S(-W)
Electrical power input in stand-by mode cooling mode (Psb)	W	11.9	11.9	11.9
Electrical power input in thermostat-OFF cooling mode (Pto)	W	0	0	0
Electrical power input in OFF mode (Poff)	W	11.9	11.9	11.9
Electrical power input in crankcase heater in cooling mode (Pck)	W	0	0	0
Sound power level of indoor unit (LWA)	dB(A)	37	37	37
Sound power level of outdoor unit (LWA)	dB(A)	61	63	64
Capacity control mode	-	Variable (Inverter)	Variable (Inverter)	Variable (Inverter)
Nominal outdoor air flow	m^3/h	2436	2436	2682

Model	Outdoor unit	RAS-2WHVRP	RAS-2.5WHVRP	RAS-3WHVRP
	Indoor unit	RWD-2.0NRWE-200S-K	RWD-2.5NRWE-200S-K	RWD-3.0NRWE-200S-K
Electrical power input in stand-by mode cooling mode (Psb)	W	11.9	11.9	11.9
Electrical power input in thermostat-OFF cooling mode (Pto)	W	0	0	0
Electrical power input in OFF mode (Poff)	W	11.9	11.9	11.9
Electrical power input in crankcase heater in cooling mode (Pck)	W	0	0	0
Sound power level of indoor unit (LWA)	dB(A)	37	37	37
Sound power level of outdoor unit (LWA)	dB(A)	61	63	64
Capacity control mode	-	Variable (Inverter)	Variable (Inverter)	Variable (Inverter)
Nominal outdoor air flow	m^3/h	2436	2436	2682

Model	Outdoor unit	RAS-2WHVRP	RAS-2.5WHVRP	RAS-3WHVRP
	Indoor unit	RWD-2.0NRWE-260S-K	RWD-2.5NRWE-260S-K	RWD-3.0NRWE-260S-K
Electrical power input in stand-by mode cooling mode (Psb)	W	11.9	11.9	11.9
Electrical power input in thermostat-OFF cooling mode (Pto)	W	0	0	0
Electrical power input in OFF mode (Poff)	W	11.9	11.9	11.9
Electrical power input in crankcase heater in cooling mode (Pck)	W	0	0	0
Sound power level of indoor unit (LWA)	dB(A)	37	37	37
Sound power level of outdoor unit (LWA)	dB(A)	61	63	64
Capacity control mode	-	Variable (Inverter)	Variable (Inverter)	Variable (Inverter)
Nominal outdoor air flow	m^3/h	2436	2436	2682

2.3.6 Additional Cooling data (EN 14825) - YUTAKI M

Model	Outdoor unit		RASM-2RE	RASM-3NRE
Electrical power input in stand-by mode cooling mode (Psb)		W	11.9	11.9
Electrical power input in thermostat-OFF cooling mode (Pto)		W	0	0
Electrical power input in OFF mode (Poff)		W	11.9	11.9
Electrical power input in crankcase heater in cooling mode (Pck)		W	0	0
Sound power level of indoor unit (LWA)		dB(A)	-	-
Sound power level of outdoor unit (LWA)		dB(A)	61	64
Capacity control mode		-	Variable (Inverter)	Variable (Inverter)
Nominal outdoor air flow		m3/h	2436	2682

2.4 General specifications

2.4.1 Considerations

- The sound data is based on the following conditions:
  - Outdoor ambient temperature (DB/WB): 7/6ºC.
  - Water inlet/outlet temperature: 47/55ºC (mark: *1); 30/35ºC (mark: *2).
  - Distance of the unit from the measuring point: At 1 meter from the unit's front surface; 1,5 meter from floor level.
  - The sound pressure level is measured in an anechoic chamber, so reflected sound should be taken into consideration when installing the unit.
  - The sound power level is measured in a reverberant room, in accordance with the standard EN12102. Used environment conditions are the same that specified in EN14511 for performance test.
- The nominal water flow rate is calculated under the following conditions:
  - Outdoor ambient temperature (DB/WB): 7/6ºC.
  - Water inlet/outlet temperature: 47/55ºC (mark: *1); 30/35ºC (mark: *2).
- Regarding data market with marked *3, it corresponds to the height of the unit with the minimum mounting foot height. This value can be adjusted up to +30 mm.
- For specific details about data corresponding to the working range, please refer to the chapter *"5. Working range"*.

Keywords:

- DB: Dry bulb
- WB: Wet bulb

2.4.2 Split system - Outdoor unit

Model			RAS-2WHVRP	RAS-2.5WHVRP	RAS-3WHVRP
Power supply		-	1~ 230V 50Hz		
Noise level (sound pressure)		dB(A)	46 (*)	47 (*)	54 (*)
Noise level (sound power)	(*1)	dB(A)	61	63	69
	(*2)		61	63	67
Air flow		m^3/min	42.1	42.1	49.7
Cabinet colour		-	Natural Gray (1.0Y 8.5/0.5)		
Unit dimensions	Height (with connections)	mm	629		
	Width	mm	799 (+99)		
	Depth	mm	300		
Packaging dimensions	Height	mm	679		
	Width	mm	952		
	Depth	mm	411		
Packaging materials			Paper - Plastic - Steel		
Net weight		kg	45	45	44
Gross weight		kg	49	49	48
Connection diameter (liquid / gas)		mm (inch)	Ø6.35 (1/4) / Ø12.7 (1/2)	Ø6.35 (1/4) / Ø12.7 (1/2)	Ø9.52 (3/8) / Ø15.88 (5/8)
Piping diameter (liquid / gas) (**)		mm (inch)	Ø6.35 (1/4) / Ø12.7 (1/2)	Ø6.35 (1/4) / Ø12.7 (1/2)	Ø6.35 (1/4) / Ø15.88 (5/8)
Minimum piping length		m	3		
Maximum chargeless piping length		m	10		
Maximum piping length (**)		m	50	50	50
Height difference between OU and IU (higher OU / lower OU) (**)		m	30 / 20		
Working range (Heating)	Outdoor ambient temperature	ºC (DB)	-20~25		
	Outlet water temperature	ºC	20~60		
Working range (Cooling)	Outdoor ambient temperature	ºC (DB)	10~46		
	Outlet water temperature	ºC	5~22		
Working range (DHW)	Outdoor ambient temperature	ºC (DB)	-20~35		
	Tank water temperature	ºC	30~75		
Refrigerant		-	R32		
Refrigerant charge before shipment		kg	1.2	1.3	1.3
Compressor type		-	Scroll DC Inverter driven		Rotary DC Inverter driven

NOTE

- *(*) Preliminary data.*
- *(**): Refer to "8.2 Refrigerant circuit" chapter.*

2.4.3 Split system - Indoor unit

2.4.3.1 YUTAKI S

Model			RWM-2.0NRE(-W)	RWM-2.5NRE(-W)	RWM-3.0NRE(-W)
Power supply		-	1~ 230V 50Hz		
Noise level (sound power)		dB(A)	37	37	37
Nominal water flow	WIT: 30 ºC / WOT: 35 ºC ΔT: 5 ºC	m^3/h	0.77	1.03	1.29
Cabinet	Material	-	Precoated galvanised steel		
	Colour	-	Pure white (RAL 9010)		
Unit dimensions	Height (with connections)	mm	712 (782)		
	Width	mm	450		
	Depth	mm	275		
Packaging dimensions	Height	mm	468		
	Width	mm	905		
	Depth	mm	539		
Packaging volume		m^3	0.23		
Packaging materials		-	Wood - Carton - Plastic		
Net weight		kg	35	36	37
Gross weight		kg	44	45	46
Refrigerant pipes connection	Connection type	-	Flare nut connection		
	Liquid pipe diameter	mm (in.)	Ø6.35 (1/4”)	Ø9.52 (3/8”)	
	Gas pipe diameter	mm (in.)	Ø15.88 (5/8”)		
Space heating pipes connection	Connection type	-	Screwed connection		
	Shutdown valves	mm (in.)	G 1” (male) - G 1” (male)		
	Inlet pipe diameter	mm (in.)	G 1” (female)		
	Outlet pipe diameter	mm (in.)	G 1” (female)		

2.4.3.2 YUTAKI S COMBI

◆ Standard model

Model			RWD-2.0NRWE-(200/260)S(-W)	RWD-2.5NRWE-(200/260)S(-W)	RWD-3.0NRWE-(200/260)S(-W)
Power supply		-	1~ 230V 50Hz		
Noise level (sound power)		dB(A)	37	37	37
Nominal water flow	WIT: 30 ºC / WOT: 35 ºC ΔT: 5 ºC	m^3/h	0.77	1.03	1.29
Cabinet	Material	-	Precoated galvanised steel		
	Colour	-	Pure white (RAL 9010)		
Unit dimensions	Height (with connections)	mm	1750 (1816) (*3)		
	Width	mm	600		
	Depth	mm	733		
Packaging dimensions	Height	mm	1950		
	Width	mm	675		
	Depth	mm	805		
Packaging volume		m^3	1.06		
Packaging materials		-	Wood - Carton - Plastic		
Net weight	Tank model: 200 L	kg	120	120	121
	Tank model: 260 L		135	135	136
Gross weight	Tank model: 200 L	kg	131	131	132
	Tank model: 260 L		146	146	147
Refrigerant pipes connection	Connection type	-	Flare nut connection		
	Liquid pipe diameter	mm (inches)	Ø6.35 (1/4”)	Ø9.52 (3/8”)	
	Gas pipe diameter	mm (inches)	Ø15.88 (5/8”)		
Space heating pipes connection	Connection type	-	Screwed connection		
	Shut-off valves	inches	G 1” (male) - G 1” (male)		
	Inlet pipe diameter	inches	G 1” (female)		
	Outlet pipe diameter	inches	G 1” (female)		
DHW pipes connection	Connection type	-	Screwed connection		
	Inlet pipe diameter	inches	G 3/4” (female)		
	Outlet pipe diameter	inches	G 3/4” (female)		

◆ Model for solar combination

Model			RWD-2.0NRWSE-260S(-W)	RWD-2.5NRWSE-260S(-W)	RWD-3.0NRWSE-260S(-W)
Power supply		-	1~ 230V 50Hz		
Noise level (sound power)		dB(A)	37	37	37
Nominal water flow	WIT: 30 ºC / WOT: 35 ºC ΔT: 5 ºC	m^3/h	0.77	1.03	1.29
Cabinet	Material	-	Precoated galvanised steel		
	Colour	-	Pure white (RAL 9010)		
Unit dimensions	Height (with connections)	mm	1750 (1816) (*3)		
	Width	mm	600		
	Depth	mm	733		
Packaging dimensions	Height	mm	1950		
	Width	mm	675		
	Depth	mm	805		
Packaging volume		m^3	1.06		
Packaging materials		-	Wood - Carton - Plastic		
Net weight		kg	138	138	139
Gross weight		kg	149	149	150
Refrigerant pipes connection	Connection type	-	Flare nut connection		
	Liquid pipe diameter	mm (inches)	Ø6.35 (1/4”)	Ø9.52 (3/8”)	
	Gas pipe diameter	mm (inches)	Ø15.88 (5/8”)		
Space heating pipes connection	Connection type	-	Screwed connection		
	Shutdown valves	inches	G 1” (male) - G 1” (male)		
	Inlet pipe diameter	inches	G 1” (female)		
	Outlet pipe diameter	inches	G 1” (female)		
DHW pipes connection	Connection type	-	Screwed connection		
	Inlet pipe diameter	inches	G 3/4” (female)		
	Outlet pipe diameter	inches	G 3/4” (female)		
Solar pipes connection	Connection type	-	Screwed connection		
	Inlet pipe diameter	inches	G 1/2” (male)		
	Outlet pipe diameter	inches	G 1/2” (male)		

◆ Model for UK market

Model			RWD-2.0NRWE-(200/260)S-K	RWD-2.5NRWE-(200/260)S-K	RWD-3.0NRWE-(200/260)S-K
Power supply		-	1~ 230V 50Hz		
Noise level (sound power)		dB(A)	37	37	37
Nominal water flow	WIT: 30 ºC / WOT: 35 ºC ΔT: 5 ºC	m^3/h	0.77	1.03	1.29
Cabinet	Material	-	Precoated galvanised steel		
	Colour	-	Pure white (RAL 9010)		
Unit dimensions	Height (with connections)	mm	1750 (1816) (*3)		
	Width	mm	600		
	Depth	mm	733		
Packaging dimensions	Height	mm	1950		
	Width	mm	675		
	Depth	mm	805		
Packaging volume		m^3	1.06		
Packaging materials		-	Wood - Carton - Plastic		
Net weight	Tank model: 200 L	kg	121	121	122
	Tank model: 260 L		136	136	137
Gross weight	Tank model: 200 L	kg	132	132	133
	Tank model: 260 L		147	147	148
Refrigerant pipes connection	Connection type	-	Flare nut connection		
	Liquid pipe diameter	mm (inches)	Ø6.35 (1/4”)	Ø9.52 (3/8”)	
	Gas pipe diameter	mm (inches)	Ø15.88 (5/8”)		
Space heating pipes connection	Connection type	-	Screwed connection		
	Shut-off valves	inches	G 1” (male) - G 1” (male)		
	Inlet pipe diameter	inches	G 1” (female)		
	Outlet pipe diameter	inches	G 1” (female)		
DHW pipes connection	Connection type	-	Screwed connection		
	Inlet pipe diameter	inches	G 3/4” (female)		
	Outlet pipe diameter	inches	G 3/4” (female)		

2.4.4 Monobloc system - YUTAKI M

Model				RASM-2VRE	RASM-3VRE
Power supply			-	1~ 230V 50Hz	
Noise level (sound pressure)			dB(A)	46 (*)	54 (*)
Noise level (sound power)		(*1)	dB(A)	61	69
		(*2)	dB(A)	61	67
Air flow			m^3/min	42.1	49.7
Nominal water flow	WIT: 30 ºC / WOT: 35 ºC ΔT: 5 ºC		m^3/h	0.77	1.29
Cabinet	Material		-	Galvanised steel	
	Colour		-	Natural Gray (1.0Y 8.5/0.5)	
Unit dimensions	Height		mm	704	704
	Width		mm	1248(+30)	1248(+30)
	Depth		mm	300	300
Packaging dimensions	Height		mm	836	836
	Width		mm	1332	
	Depth		mm	420	
Packaging volume			m^3	0.5	0.5
Packaging materials			-	Paper - Wood - Plastic	
Net weight			kg	76	78
Gross weight			Kg	90	92
Space heating pipes connection	Connection type		-	Screwed connection	
	Shut-off valves (Field-supplied)		inches	G 1” (male) - G 1” (male)	G 1” (male) - G 1” (male)
	Inlet pipe diameter		inches	G 1” (female)	G 1” (female)
	Outlet pipe diameter		inches	G 1” (female)	G 1” (female)
Working range (Heating)	Outdoor ambient temperature		ºC (DB)	-20~25	
	Outlet water temperature		ºC	20~60	20~60
Working range (Cooling)	Outdoor ambient temperature		ºC (DB)	10~46	
	Outlet water temperature		ºC	5~22	
Working range (DHW)	Outdoor ambient temperature		ºC (DB)	-20~35	
	Tank water temperature		ºC	30~75	
Refrigerant			-	R32	
Refrigerant charge			kg	1.2	1.3
Compressor type			-	Scroll DC Inverter driven	Rotary DC Inverter Driven

NOTE

(*) Preliminary data.

2.4.5 Domestic Hot Water Tank

Model				DHWT-200S-3.0H2E	DHWT-300S-3.0H2E
Casing	Color			White	
	Material			Polypropylene jacked	
Dimensions	Packing	Height	mm	1300	1880
		Width	mm	600	600
		Depth	mm	600	600
	Unit	Height	mm	1270	1750
		Width	mm	595	595
		Depth	mm	595	595
Weight	Unit		kg	53	63
	Packed unit		kg	63.5	73
Packing	Material			EPS	
				Carton	
	Weight		kg	10.5	11
Main components	Tank	Water volume	L	194	282
		Material		Stainless Steel	
		Max tank temperature	°C	75	75
		Max tank water pressure	bar	10	10
		Maximum heating coil water working temperature	°C	99	99
		Maximum heating coil water working pressure	bar	10	10
Tank	Insulation	Material		Polyurethane	
		Heat loss (*)	kW·h/day	1.128	1.512
		Min thickness	mm	50	50
Main components	Heat exchanger	Quantity		1	1
		Coil surface area	m^2	1.4	1.8
	Booster heater	Quantity		1	1
		Heater rating	kW	3	3
	Type			Immersion heater type	
Piping connections	Water inlet domestic connection		inches	¾ (female)	
	Water outlet domestic connection		inches	¾ (female)	
	Recirculation		inches	¾ (female)	
	In coil connection		inches	¾ (female)	
	Out coil connection		inches	¾ (female)	
Thermometer				Yes	
Mechanical thermostat (security)				Yes	
Protection				-	

NOTE

(*): Heat loss according to EN-12897:2007

2.5 Component data

2.5.1 Split system - Outdoor unit

MODEL			RAS-2WHVRP	RAS-2.5WHVRP	RAS-3WHVRP
Air heat exchanger	Type		Multi-pass cross-finned tube		
	Pipe material		Copper		
	Outer diameter	mm	7		
	Rows		2		
	Number of tubes in the heat exchanger		44		
	Fin material		Aluminium		
	Fin pitch		1.45		
	Maximum operating pressure	MPa	4.15		
	Total front area	m^2	0.47		
	Number of heat exchanger per unit		1		
Fan	Fan type		Direct drive propeller fan		
	Fans per unit		1		
	Outer diameter	mm	449		
	Revolutions	rpm	790		970
	Nominal air flow	m^3/min	45.9		57
Motor	Shell		Drip-proof type enclosure		
	Starting		Direct current control		
	Power	W	40		
	Quantity		1		
	Insulation class		E		
Compressor	Model		EX118HF1	EX118HF1	GTD163UK QA8LTH
	Oil Type		ACS68R		ACS68R
	Quantity (l)		0.75		0.75

2.5.2 Split system - Indoor unit

2.5.2.1 YUTAKI S

Model				RWM-2.0NRE(-W)	RWM-2.5NRE(-W)	RWM-3.0NRE(-W)
Water heat exchanger	Type		-	Brazed plate		
	Material		-	Stainless steel		
	Transfer fluids		-	R32 - H_2O		
	Quantity		-	1		
	Internal refrigerant volume		L	0.54	0.73	0.81
	Internal water volume		L	0.57	0.76	0.84
	Insulation material		-	NBR + PVC		
Water pump	Model		-	PARA RS15/7.0		
	Type		-	Inverter		
	Control		-	PWM		
	Power supply		-	1~ 230V 50Hz		
	Maximum lift pressure		mwp	7.6		
	Maximum water flow		m^3/h	3.5		
	Maximum power input		W	50		
	Piping	Water inlet	inches	G 1”		
		Water outlet	inches	G 1”		
		Inlet/outlet distance	mm	130		
Water electric heater	Material		-	Stainless steel (Immersion heating element)		
	Power supply		-	1~ 230V 50Hz		
	Maximum electric heater power		kW	3.0		
	Regulated electric heater power (step 1/ step 2/ step 3)		kW	1.0/2.0/3.0		
	Capillary thermostat		-	Yes (Cut-out: 90 ºC)		
	Surface thermostat		-	Manual reset, Non-adjustable (one per unit) 75ºC±5%		
Expansion vessel	Material		-	Steel (with stainless/galvanized steel connections)		
	Internal water volume		L	6.0		
	Working pressure		bar	3.0		
	Pre-loading pressure (Air side)		bar	1.0		
Water strainer	Type		-	Isolated water strainer (Filter ball)		
	Material		-	Brass		
	Piping connection		inches	1”, DN25		
	Mesh (hole size)		mm	0.7		
	Self-cleaning (with back flush) filter		-	Yes		
Safety valve			-	Yes (3 bar)		
Low pressure switch			-	Yes (<0.5 bar)		
Shut-off valve			-	Yes (2 factory-supplied valves)		
Air purger			-	Yes		
Manometer			-	Yes		
Unit controller			-	Yes (PC-ARFH1E)		

2.5.2.2 YUTAKI S COMBI

◆ **Standard model and UK market model**

Model				RWD-2.0NRWE-(200/260)S(-K)(-W)	RWD-2.5NRWE-(200/260)S(-K)(-W)	RWD-3.0NRWE-(200/260)S(-K)(-W)
Domestic hot water tank	Casing material			Stainless steel		
	Tank	Nominal water volume	L	RWD-NRWE-200S(-K): 200 L RWD-NRWE-260S(-K): 260 L		
		Net water volume	L	RWD-NRWE-200S(-K): 190L RWD-NRWE-260S(-K): 250L		
		Material	-	DUPLEX or AISI 444		
		Max. water temperature	°C	75		
		Max. water pressure	bar	10		
		Max. heating coil water temperature	°C	75		
		Max. heating coil water pressure	bar	3		
	Tank insulation	Material	-	NEOPOR		
		Thickness	mm	50		
	Heat exchanger	Quantity	-	1		
		Coil surface area	m^2	1.60		
		Internal coil volume	L	20.37		
	Tank's heater	Quantity	-	1		
		Type	-	Immersion heater type		
		Heater rating	kW	2.7		
	Mechanical thermostat (adjustable and security)		-	Yes (adjustable 28~80ºC ; cut-out: 95ºC)		
Water heat exchanger	Type		-	Brazed plate		
	Material		-	Stainless steel		
	Transfer fluids		-	R32 - H_2O		
	Quantity		-	1		
	Internal refrigerant volume		L	0.54	0.73	0.81
	Internal water volume		L	0.57	0.76	0.84
	Insulation material		-	NBR + PVC		
Water pump	Model		-	PARA RS15/7.0		
	Type		-	Inverter		
	Control		-	PWM		
	Power supply		-	1~ 230V 50Hz		
	Maximum lift pressure		mwp	7.6		
	Maximum water flow		m^3/h	3.5		
	Maximum power input		W	50		
	Piping	Water inlet	(in.)	G 1”		
		Water outlet	(in.)	G 1”		
		Inlet/outlet distance	mm	130		
Water electric heater	Material		-	Stainless steel (Immersion heating element)		
	Power supply		-	1~ 230V 50Hz		
	Maximum electric heater power		kW	3.0		
	Regulated electric heater power (step 1/ step 2/ step 3)		kW	1.0/2.0/3.0		
	Thermostat security		-	Yes (Cut-out: 90 ºC)		

Model			RWD-2.0NRWE-(200/260)S(-K)(-W)	RWD-2.5NRWE-(200/260)S(-K)(-W)	RWD-3.0NRWE-(200/260)S(-K)(-W)
Expansion vessel	Material	-	Steel (with stainless/galvanized steel connections)		
	Internal water volume	L	6.0		
	Working pressure	bar	3.0		
	Pre-loading pressure (Air side)	bar	1.0		
Water strainer	Type	-	Isolated water strainer (Filter ball)		
	Material	-	Brass		
	Piping connection	(in.)	1”, DN25		
	Mesh (hole size)	mm	0.7		
	Self-cleaning (with back flush) filter	-	Yes		
DHWT Pressure and temperature relief valve (1)		bar	7		
		ºC	96		
Safety valve		-	Yes (3 bar)		
Low pressure switch		-	Yes (<0.5 bar)		
Unit drain port		-	Yes		
DHW drain valve		-	Yes		
Shut-off valve		-	Yes (2 factory-supplied valves)		
Air purger		-	Yes		
Manometer		-	Yes		
Unit controller		-	Yes (PC-ARFH1E)		

(1) Only for UK version.

◆ Model for solar combination

Model				RWD-2.0NRW(S)E-260S(-W)	RWD-2.5NRW(S)E-260S(-W)	RWD-3.0NRW(S)E-260S(-W)
Domestic hot water tank	Casing material			Stainless steel		
	Tank	Nominal water volume	L	RWD-NRWE-200S: 200 L RWD-NRWE-260S: 260 L		
		Net water volume	L	RWD-NRWE-200S: 182L RWD-NRWE-260S: 242L		
		Material	-	AISI 444		
		Max. water temperature	°C	75		
		Max. water pressure	bar	10		
		Max. heating coil water temperature	°C	75		
		Max. heating coil water pressure	bar	3		
	Tank insulation	Material	-	NEOPOR		
		Thickness	mm	50		
	Heat exchanger (Heating coil)	Quantity	-	1		
		Coil surface area	m^2	1.60		
	Heat exchanger (Solar coil)	Quantity	-	1		
		Coil surface area	m^2	0.37		
		Internal coil volume	dm^3	1.11		
	Tank's heater	Quantity	-	1		
		Type	-	Immersion heater type		
		Heater rating	kW	2.7		
	Mechanical thermostat (adjustable and security)		-	Yes (adjustable 28~80ºC ; cut-out: 90ºC)		
Water heat exchanger	Type		-	Brazed plate		
	Material		-	Stainless steel		
	Transfer fluids		-	R32 - H_2O		
	Quantity		-	1		
	Internal refrigerant volume		L	0.54	0.73	0.81
	Internal water volume		L	0.57	0.76	0.84
	Insulation material		-	NBR + PVC		
Water pump	Model		-	PARA RS15/7.0		
	Type		-	Inverter		
	Control		-	PWM		
	Power supply		-	1~ 230V 50Hz		
	Maximum lift pressure		bar	7.6		
	Maximum water flow		m^3/h	3.5		
	Maximum power input		W	50		
	Piping	Water inlet	(in.)	G 1”		
		Water outlet	(in.)	G 1”		
		Inlet/outlet distance	mm	130		
Water electric heater	Material		-	Stainless steel (Immersion heating element)		
	Power supply		-	1~ 230V 50Hz		
	Maximum electric heater power		kW	3.0		
	Regulated electric heater power (step 1/ step 2/ step 3)		kW	1.0/2.0/3.0		
	Thermostat security		-	Yes (Cut-out: 90 ºC)		

Model			RWD-2.0NRW(S)E-260S(-W)	RWD-2.5NRW(S)E-260S(-W)	RWD-3.0NRW(S)E-260S(-W)
Expansion vessel	Material	-	Steel (with stainless/galvanized steel connections)		
	Internal water volume	L	6.0		
	Working pressure	bar	3.0		
	Pre-loading pressure (Air side)	bar	1.0		
Water strainer	Type	-	Isolated water strainer (Filter ball)		
	Material	-	Brass		
	Piping connection	(in.)	1”, DN25		
	Mesh (hole size)	mm	0.7		
	Self-cleaning (with back flush) filter	-	Yes		
Safety valve		-	Yes (3 bar)		
Low pressure switch		-	Yes (<0.5 bar)		
Unit drain valve		-	Yes		
DHW drain valve		-	Yes		
Shut-off valve		-	Yes (2 factory-supplied valves)		
Air purger		-	Yes		
Manometer		-	Yes		
Unit controller		-	Yes (PC-ARFH1E)		

2.5.3 Monobloc system - YUTAKI M

Model				RASM-2VRE	RASM-3VRE
Compressor	Model	1~ 230V 50Hz	-	EX118HF1	GTD163UKQA
	Type		-	Scroll DC Inverter driven	Rotary DC Inverter driven
	Pressure resistance	Discharge	MPa	4.15	
		Suction	MPa	2.21	
	Motor type	Starting method	-	Direct current control	
		Poles	-	4	
		Insulation class	-	E	
	Oil type		-	ACS68R	ACS68R
	Oil quantity		L	0.75	0.75
Air heat exchanger	Type		-	Multi-pass cross-finned tube	
	Pipe material		-	Copper	
	Outer diameter		mm	7	7
	Rows		-	2	
	Number of tubes in the heat exchanger		-	44	40
	Fin material		-	Aluminium	
	Fin pitch		mm	1.45	
	Maximum operating pressure		MPa	4.15	
	Total front area		m^2	0.47	1.35
	Number of heat exchanger per unit		-	1	
Fan	Fan type		-	Direct drive propeller fan	
	Fans per unit		-	1	2
	Outer diameter		mm	449	449
	Revolutions		rpm	790	970
	Nominal air flow		m^3/min	45.9	57
Motor	Type		-	Drip-proof type enclosure	
	Starting method		-	Direct current control	
	Power		W	40	40
	Quantity		-	1	1
	Insulation class		-	E	
Water heat exchanger	Type		-	Brazed plate	
	Material		-	Stainless steel	
	Transfer fluids		-	R32 - H_2O	
	Quantity		-	1	
	Internal refrigerant volume		L	0.54	0.81
	Internal water volume		L	0.57	0.84
	Insulation material		-	NBR + PVC	
Water pump	Model		-	PARA RS15/7.0	PARA RS15/7.5
	Type		-	Inverter	
	Control		-	PWM	
	Power supply		-	1~ 230V 50Hz	
	Maximum lift pressure		kPa	7.6	7.6
	Maximum water flow		m^3/h	3.5	3.5
	Maximum power input		W	50	50
	Piping	Water inlet	(in.)	G 1”	
		Water outlet	(in.)	G 1”	
		Inlet/outlet distance	mm	130	

Model			RASM-2VRE	RASM-3VRE
Expansion vessel	Material	-	Stainless steel (Immersion heating element)	
	Internal water volume	L	6.0	
	Working pressure	bar	3.0	
	Pre-loading pressure (Air side)	bar	1.0	
Water strainer	Type	-	Isolated water strainer (Filter ball)	
	Material	-	Brass	
	Piping connection	(in.)	1”, DN25	
	Mesh (hole size)	mm	0.7	
	Self-cleaning (with back flush) filter	-	Yes	
Safety valve		-	Yes (3 bar)	
Shut-off valve		-	No. Field supplied accessory.	
Air purger		-	Yes	
Manometer		-	Yes	
Unit controller		-	No, Supplied as accessory	

2.6 Electrical data

2.6.1 Considerations

Keywords:

- U: Power supply.
- PH: Phase.
- IPT: Total input power.
- STC: Starting current: Less than maximum current.
- RNC: Running current.
- MC: Maximum current.

NOTE

- *Heating conditions: Inlet/outlet water temperature: 30/35 ºC; Outdoor ambient temperature (DB/WB): 7/6 ºC.*
- *The compressor data shown in the tables below are based on a combined capacity of 100% of the power supplied.*
- *The "Maximum current" shown in the above table is the maximum total unit running current at the following conditions:*
  - *Supply voltage: 90% of the rated voltage.*
  - *Unit capacity: 100% at maximum operating conditions.*
- *The power supply cables must be sized to cover this maximum current value.*
- *Specifications in these tables are subject to change without notice in order that HITACHI may bring the latest innovations to their customers.*
- ***Please refer to the general information, cautions and notes regarding protective devices (CB, ELB) throughout the "9.3 Electrical connection" chapter.***

2.6.2 Split system - Outdoor unit

RAS-(2-3)WHVRP in combination with YUTAKI S, YUTAKI S COMBI

Model	Power supply	Applicable voltage		Compressor and fan motors				MC (A)	Max. IPT (kW)
				Cooling		Heating			
		U max. (V)	U min. (V)	RNC (A)	IPT (KW)	RNC (A)	IPT (KW)		
RAS-2WHVRP	1~ 230V 50Hz	253	207	4.5	1.00	5.0	1.09	10.4	2.27
RAS-2.5WHVRP				5.0	1.12	5.5	1.19	12.9	2.82
RAS-3WHVRP				7.6	1.67	8.1	1.79	15.8	3.49

2.6.3 Split system - Indoor unit

2.6.3.1 YUTAKI S

RWM-(2.0-3.0)NRE(-W)

Model	Power supply	Applicable voltage		Operation mode	RNC (A)	IPT (kW)	MC (A)	Max. IPT (kW)
		U max. (V)	U min. (V)					
RWM-(2.0-3.0) NRE(-W)	1~ 230V 50Hz	253	207	Without electric heater	0.2	0.05	0.2	0.05
				With electric heater	13.3	3.05	14.6	3.05
				With DHW tank heater	13.3	3.05	14.6	3.05
				With electric and DHW tank heaters	26.3	6.05	28.9	6.05

NOTE

The data corresponding to DHW tank heater is calculated in combination with the domestic hot water tank accessory "DHWT-(200/300)S-3.0H2E".

2.6.3.2 YUTAKI S COMBI

RWD-(2.0-3.0)NRW(S)E-(200/260)S(-K)(-W)

Model	Power supply	Applicable voltage		Operation mode	RNC (A)	IPT (kW)	MC (A)	Max. IPT (kW)
		U max. (V)	U min. (V)					
RWD-(2.0-3.0NRW(S)E-(200/260)S(-K)(-W)	1~ 230V 50Hz	253	207	Without electric heater	0.2	0.05	0.2	0.05
				With electric heater	13.3	3.05	14.6	3.05
				With DHW tank heater	12.2	2.80	12.7	2.80
				With electric and DHW tank heaters	25.2	5.80	27.1	5.80

2

2.6.4 Monobloc system - YUTAKI M

RASM-(2-3)VRE

Model	Power supply	Applicable voltage		Operation mode	Cooling		Heating		MC (A)	Max. IPT (kW)
		U max. (V)	U min. (V)		RNC (A)	IPT (KW)	RNC (A)	IPT (KW)		
RASM-2VRE	1~ 230V 50Hz	253	207	Without DHW tank heater	4.8	1.00	5.5	1.14	10.6	2.32
				With DHW tank heater	4.8	1.00	18.8	3.89	23.1	5.07
RASM-3VRE				Without DHW tank heater	9.4	1.94	8.9	1.84	16.0	3.54
				With DHW tank heater	9.4	1.94	22.2	4.59	28.5	6.29

NOTE

The data corresponding to DHW tank heater is calculated in combination with the domestic hot water tank accessory "DHWT-(200/300)S-3.0H2E".

3. Capacity and selection data

Index

3.1 YUTAKI S 58

3.1.1 Maximum heating capacity table (kW) (Integrated) 58

3.1.2 Maximum cooling capacity table (kW) 59

3.2 YUTAKI S COMBI 60

3.2.1 Maximum heating capacity table (kW) (Integrated) 60

3.2.2 Maximum cooling capacity table (kW) 61

3.3 YUTAKI M 62

3.3.1 Maximum heating capacity table (kW) (Integrated) 62

3.3.2 Maximum cooling capacity table (kW) 63

3.4 Correction factors 64

3.4.1 Piping length correction factor 64

3.4.2 Correction factor owing to use of glycol (only for YUTAKI M) 66

3.1 YUTAKI S

3.1.1 Maximum heating capacity table (kW) (Integrated)

		Ambient temperature (ºC WB)																					
		-20		-15		-10		-7		-2		2		7		12		15		20		25	
System	Water outlet temp (ºC)	CAP (kW)	IPT (kW)	CAP (kW)	IPT (kW)	CAP (kW)	IPT (kW)	CAP (kW)	IPT (kW)	CAP (kW)	IPT (kW)	CAP (kW)	IPT (kW)	CAP (kW)	IPT (kW)	CAP (kW)	IPT (kW)	CAP (kW)	IPT (kW)	CAP (kW)	IPT (kW)	CAP (kW)	IPT (kW)
RAS-2WHVRP + RWM-2.0NRE(-W)	60							3.20	2.29	3.64	2.25	4.00	2.22	5.00	2.17	5.50	1.77	5.66	1.71	5.93	1.61	6.20	1.51
	55					4.00	2.42	4.20	2.27	4.48	2.25	4.70	2.24	6.00	2.22	6.30	1.80	6.46	1.68	6.73	1.48	7.00	1.27
	50					4.36	2.32	4.60	2.22	4.85	2.13	5.05	2.05	6.15	2.01	6.65	1.71	6.85	1.61	7.17	1.43	7.50	1.25
	45	4.00	2.35	4.25	2.30	4.72	2.22	5.00	2.17	5.22	2.00	5.40	1.86	6.30	1.80	7.00	1.63	7.23	1.54	7.62	1.38	8.00	1.23
	40	4.15	2.34	4.54	2.24	4.93	2.14	5.17	2.08	5.32	1.86	5.45	1.70	6.40	1.59	7.25	1.48	7.48	1.42	7.87	1.31	8.25	1.21
	35	4.30	2.32	4.50	2.14	5.02	2.04	5.33	1.98	5.42	1.73	5.49	1.53	6.50	1.38	7.50	1.34	7.73	1.30	8.12	1.24	8.50	1.18
	30	4.50	2.23	4.80	2.09	5.31	1.93	5.62	1.83	5.69	1.65	5.75	1.50	6.70	1.34	7.75	1.30	7.98	1.27	8.37	1.20	8.75	1.14
	25	4.70	2.14	5.10	2.04	5.60	1.82	5.90	1.68	5.95	1.56	6.00	1.46	6.90	1.30	8.00	1.27	8.23	1.23	8.62	1.16	9.00	1.09
	20	4.90	2.04	5.40	1.99	5.89	1.71	6.18	1.54	6.22	1.48	6.25	1.43	7.10	1.26	8.25	1.24	8.48	1.19	8.87	1.12	9.25	1.05
RAS-2.5WHVRP + RWM-2.5NRE(-W)	60							4.00	3.33	4.72	3.27	5.30	3.21	6.20	2.58	6.50	2.24	6.66	2.25	6.93	2.27	7.20	2.29
	55					4.70	3.13	5.00	2.94	5.44	2.81	5.80	2.70	7.00	2.64	7.50	2.42	7.73	2.34	8.12	2.21	8.50	2.07
	50					5.10	2.97	5.40	2.85	5.90	2.74	6.30	2.66	7.48	2.60	8.00	2.27	8.31	2.22	8.83	2.14	8.75	1.85
	45	4.60	2.86	5.00	2.86	5.50	2.80	5.80	2.76	6.36	2.68	6.80	2.62	7.97	2.57	8.50	2.12	8.62	2.01	8.81	1.82	9.00	1.64
	40	4.80	2.77	5.27	2.77	5.73	2.71	6.01	2.67	6.51	2.54	6.90	2.44	8.28	2.28	8.85	1.95	9.00	1.84	9.25	1.66	9.50	1.48
	35	5.00	2.77	5.40	2.77	5.92	2.65	6.23	2.58	6.66	2.40	7.00	2.26	8.60	2.00	9.20	1.77	9.39	1.67	9.70	1.50	10.01	1.33
	30	5.25	2.72	5.70	2.72	6.12	2.53	6.36	2.41	6.82	2.25	7.18	2.12	8.85	1.93	9.50	1.67	9.63	1.59	9.84	1.44	10.05	1.29
	25	5.50	2.67	6.00	2.67	6.31	2.40	6.50	2.24	6.97	2.10	7.35	1.99	9.10	1.86	9.80	1.58	9.87	1.50	9.98	1.38	10.10	1.25
	20	5.75	2.57	6.30	2.57	6.51	2.32	6.63	2.17	7.13	2.00	7.52	1.87	9.35	1.79	10.10	1.49	10.11	1.42	10.13	1.31	10.15	1.20
RAS-3WHVRP + RWM-3.0NRE(-W)	60							5.10	3.64	5.77	3.46	6.31	3.32	7.50	3.21	8.00	2.76	8.12	2.73	8.31	2.70	8.50	2.66
	55					5.30	3.53	5.50	3.44	6.42	3.42	7.15	3.40	9.00	3.30	9.80	3.11	9.85	3.07	9.92	3.01	10.00	2.94
	50					5.80	3.39	6.08	3.31	6.83	3.24	7.43	3.18	9.15	3.08	9.90	2.91	10.03	2.88	10.24	2.83	10.45	2.78
	45	5.25	3.39	5.70	3.35	6.30	3.24	6.67	3.18	7.24	3.06	7.70	2.96	9.30	2.86	10.00	2.70	10.21	2.68	10.55	2.66	10.90	2.63
	40	5.63	3.36	6.19	3.27	6.75	3.17	7.08	3.12	7.64	2.96	8.09	2.83	10.15	2.77	10.75	2.60	10.88	2.59	11.09	2.56	11.30	2.53
	35	6.00	3.33	6.25	3.29	7.03	3.14	7.50	3.06	8.04	2.85	8.47	2.69	10.99	2.68	11.50	2.50	11.55	2.49	11.62	2.46	11.70	2.44
	30	6.25	3.29	6.52	3.23	7.23	3.08	7.65	3.00	8.36	2.77	8.94	2.58	11.15	2.57	11.65	2.32	11.70	2.30	11.77	2.26	11.85	2.22
	25	6.50	3.25	6.80	3.16	7.42	3.02	7.80	2.94	8.69	2.68	9.40	2.48	11.30	2.46	11.80	2.15	11.85	2.11	11.92	2.06	12.00	2.00
	20	6.75	3.21	7.08	3.10	7.62	2.97	7.94	2.88	9.09	2.62	10.00	2.40	11.50	2.40	12.00	2.00	12.16	1.97	12.43	1.92	12.70	1.87

NOTE

- *CAP: Capacity at compressor maximum frequency. Capacity is valid for difference between water inlet and water outlet of 3-8ºC.*
- *IPT: Total input power.*

The table above shows the input power (IPT) at maximum capacity (CAP). Most of the time, the unit will run at partial load, so that the actual input power will be lower.

3.1.2 Maximum cooling capacity table (kW)

System	Water outlet temp (ºC)	Ambient temperature (ºC WB)																							
		10			15			20			25			30			35			40			45		
		CAP (kW)	IPT (kW)	EER (kW)	CAP (kW)	IPT (kW)	EER (kW)	CAP (kW)	IPT (kW)	EER (kW)	CAP (kW)	IPT (kW)	EER (kW)	CAP (kW)	IPT (kW)	EER (kW)	CAP (kW)	IPT (kW)	EER (kW)	CAP (kW)	IPT (kW)	EER (kW)	CAP (kW)	IPT (kW)	EER (kW)
RAS-2WHVRP +RWM-2.0NRE(-W)	22										7.40	0.95	7.80	6.93	1.03	6.74	6.45	1.11	5.83	5.98	1.19	5.04	5.50	1.26	4.35
	18							7.50	0.96	7.80	7.10	0.97	7.30	6.80	1.08	6.30	6.40	1.21	5.30	5.75	1.27	4.54	5.10	1.32	3.85
	15	7.00	0.97	7.20	6.92	0.99	7.02	6.83	1.00	6.84	6.75	1.01	6.67	6.27	1.10	5.68	5.79	1.19	4.84	5.31	1.29	4.13	4.83	1.38	3.50
	10	6.80	0.97	7.00	6.58	1.01	6.54	6.37	1.04	6.12	6.15	1.08	5.72	5.71	1.17	4.86	5.26	1.27	4.14	4.82	1.37	3.52	4.37	1.47	2.98
	7	6.20	0.98	6.30	6.10	1.03	5.94	6.00	1.07	5.60	5.80	1.12	5.20	5.40	1.23	4.40	5.00	1.33	3.75	4.55	1.43	3.19	4.10	1.52	2.70
	5				5.50	1.08	5.10	5.20	1.17	4.46	4.90	1.26	3.90	4.60	1.34	3.42	4.30	1.43	3.00	4.00	1.52	2.63	3.70	1.61	2.30
RAS-2.5WHVRP +RWM-2.5NRE(-W)	22										8.70	1.19	7.30	8.10	1.27	6.38	7.50	1.35	5.57	6.90	1.42	4.85	6.30	1.50	4.20
	18							8.50	1.21	7.00	8.30	1.24	6.70	7.90	1.36	5.80	7.20	1.48	4.85	6.60	1.58	4.19	6.00	1.67	3.60
	15	8.10	1.25	6.50	8.03	1.26	6.39	7.96	1.27	6.28	7.89	1.28	6.17	7.35	1.39	5.29	6.81	1.50	4.54	6.27	1.61	3.90	5.73	1.72	3.34
	10	7.60	1.25	6.10	7.47	1.28	5.84	7.34	1.31	5.59	7.21	1.35	5.35	6.73	1.46	4.60	6.24	1.57	3.96	5.76	1.69	3.41	5.27	1.80	2.93
	7	7.10	1.31	5.40	7.00	1.34	5.23	6.90	1.36	5.06	6.80	1.39	4.90	6.30	1.58	4.00	6.00	1.74	3.45	5.50	1.80	3.06	5.00	1.85	2.70
	5				6.80	1.36	5.00	6.43	1.49	4.32	6.07	1.62	3.75	5.70	1.75	3.26	5.33	1.88	2.84	4.97	2.01	2.47	4.60	2.14	2.15
RAS-3WHVRP +RWM-3.0NRE(-W)	22										10.50	1.67	6.30	9.90	1.73	5.72	9.30	1.80	5.17	8.70	1.86	4.67	8.10	1.93	4.20
	18							10.60	1.64	6.45	10.20	1.71	5.95	9.50	1.84	5.15	9.00	1.94	4.65	8.00	1.98	4.04	7.00	2.03	3.45
	15	9.50	1.40	6.80	9.52	1.52	6.26	9.55	1.65	5.80	9.57	1.77	5.40	8.86	1.87	4.75	8.15	1.96	4.16	7.44	2.05	3.63	6.73	2.14	3.14
	10	8.80	1.44	6.10	8.71	1.58	5.50	8.62	1.73	4.99	8.53	1.87	4.56	7.96	1.99	4.01	7.40	2.10	3.52	6.84	2.22	3.08	6.27	2.33	2.69
	7	8.10	1.56	5.20	8.03	1.68	4.78	7.97	1.80	4.42	7.90	1.93	4.10	7.60	2.05	3.70	7.00	2.19	3.20	6.50	2.32	2.80	6.00	2.45	2.45
	5				8.00	1.74	4.60	7.68	1.86	4.12	7.35	1.99	3.70	7.03	2.11	3.33	6.70	2.23	3.00	6.15	2.45	2.51	5.60	2.67	2.10

NOTE

- *CAP: Capacity at compressor maximum frequency. Capacity is valid for difference between water inlet and water outlet of 3-8ºC.*
- *IPT: Total input power.*

3.2 YUTAKI S COMBI

3.2.1 Maximum heating capacity table (kW) (Integrated)

System	Water outlet temp (ºC)	Ambient temperature (ºC WB)																					
		-20		-15		-10		-7		-2		2		7		12		15		20		25	
		CAP (kW)	IPT (kW)	CAP (kW)	IPT (kW)	CAP (kW)	IPT (kW)	CAP (kW)	IPT (kW)	CAP (kW)	IPT (kW)	CAP (kW)	IPT (kW)	CAP (kW)	IPT (kW)	CAP (kW)	IPT (kW)	CAP (kW)	IPT (kW)	CAP (kW)	IPT (kW)	CAP (kW)	IPT (kW)
RAS-2WHVRP + RWD-2.0NRW(S)E-(200/260)S(-K)(-W)	60							3.20	2.29	3.64	2.25	4.00	2.22	5.00	2.17	5.50	1.77	5.66	1.71	5.93	1.61	6.20	1.51
	55					4.00	2.42	4.20	2.27	4.48	2.25	4.70	2.24	6.00	2.22	6.30	1.80	6.46	1.68	6.73	1.48	7.00	1.27
	50					4.36	2.32	4.60	2.22	4.85	2.13	5.05	2.05	6.15	2.01	6.65	1.71	6.85	1.61	7.17	1.43	7.50	1.25
	45	4.00	2.35	4.25	2.30	4.72	2.22	5.00	2.17	5.22	2.00	5.40	1.86	6.30	1.80	7.00	1.63	7.23	1.54	7.62	1.38	8.00	1.23
	40	4.15	2.34	4.54	2.24	4.93	2.14	5.17	2.08	5.32	1.86	5.45	1.70	6.40	1.59	7.25	1.48	7.48	1.42	7.87	1.31	8.25	1.21
	35	4.30	2.32	4.50	2.14	5.02	2.04	5.33	1.98	5.42	1.73	5.49	1.53	6.50	1.38	7.50	1.34	7.73	1.30	8.12	1.24	8.50	1.18
	30	4.50	2.23	4.80	2.09	5.31	1.93	5.62	1.83	5.69	1.65	5.75	1.50	6.70	1.34	7.75	1.30	7.98	1.27	8.37	1.20	8.75	1.14
	25	4.70	2.14	5.10	2.04	5.60	1.82	5.90	1.68	5.95	1.56	6.00	1.46	6.90	1.30	8.00	1.27	8.23	1.23	8.62	1.16	9.00	1.09
	20	4.90	2.04	5.40	1.99	5.89	1.71	6.18	1.54	6.22	1.48	6.25	1.43	7.10	1.26	8.25	1.24	8.48	1.19	8.87	1.12	9.25	1.05
RAS-2.5WHVRP + RWD-2.5NRW(S)E-(200/260)S(-K)(-W)	60							4.00	3.33	4.72	3.27	5.30	3.21	6.20	2.58	6.50	2.24	6.66	2.25	6.93	2.27	7.20	2.29
	55					4.70	3.13	5.00	2.94	5.44	2.81	5.80	2.70	7.00	2.64	7.50	2.42	7.73	2.34	8.12	2.21	8.50	2.07
	50					5.10	2.97	5.40	2.85	5.90	2.74	6.30	2.66	7.48	2.60	8.00	2.27	8.31	2.22	8.83	2.14	8.75	1.85
	45	4.60	2.86	5.00	2.86	5.50	2.80	5.80	2.76	6.36	2.68	6.80	2.62	7.97	2.57	8.50	2.12	8.62	2.01	8.81	1.82	9.00	1.64
	40	4.80	2.77	5.27	2.77	5.73	2.71	6.01	2.67	6.51	2.54	6.90	2.44	8.28	2.28	8.85	1.95	9.00	1.84	9.25	1.66	9.50	1.48
	35	5.00	2.77	5.40	2.77	5.92	2.65	6.23	2.58	6.66	2.40	7.00	2.26	8.60	2.00	9.20	1.77	9.39	1.67	9.70	1.50	10.01	1.33
	30	5.25	2.72	5.70	2.72	6.12	2.53	6.36	2.41	6.82	2.25	7.18	2.12	8.85	1.93	9.50	1.67	9.63	1.59	9.84	1.44	10.05	1.29
	25	5.50	2.67	6.00	2.67	6.31	2.40	6.50	2.24	6.97	2.10	7.35	1.99	9.10	1.86	9.80	1.58	9.87	1.50	9.98	1.38	10.10	1.25
	20	5.75	2.57	6.30	2.57	6.51	2.32	6.63	2.17	7.13	2.00	7.52	1.87	9.35	1.79	10.10	1.49	10.11	1.42	10.13	1.31	10.15	1.20
RAS-3WHVRP + RWD-3.0NRW(S)E-(200/260)S(-K)(-W)	60							5.10	3.64	5.77	3.46	6.31	3.32	7.50	3.21	8.00	2.76	8.12	2.73	8.31	2.70	8.50	2.66
	55					5.30	3.53	5.50	3.44	6.42	3.42	7.15	3.40	9.00	3.30	9.80	3.11	9.85	3.07	9.92	3.01	10.00	2.94
	50					5.80	3.39	6.08	3.31	6.83	3.24	7.43	3.18	9.15	3.08	9.90	2.91	10.03	2.88	10.24	2.83	10.45	2.78
	45	5.25	3.39	5.70	3.35	6.30	3.24	6.67	3.18	7.24	3.06	7.70	2.96	9.30	2.86	10.00	2.70	10.21	2.68	10.55	2.66	10.90	2.63
	40	5.63	3.36	6.19	3.27	6.75	3.17	7.08	3.12	7.64	2.96	8.09	2.83	10.15	2.77	10.75	2.60	10.88	2.59	11.09	2.56	11.30	2.53
	35	6.00	3.33	6.25	3.29	7.03	3.14	7.50	3.06	8.04	2.85	8.47	2.69	10.99	2.68	11.50	2.50	11.55	2.49	11.62	2.46	11.70	2.44
	30	6.25	3.29	6.52	3.23	7.23	3.08	7.65	3.00	8.36	2.77	8.94	2.58	11.15	2.57	11.65	2.32	11.70	2.30	11.77	2.26	11.85	2.22
	25	6.50	3.25	6.80	3.16	7.42	3.02	7.80	2.94	8.69	2.68	9.40	2.48	11.30	2.46	11.80	2.15	11.85	2.11	11.92	2.06	12.00	2.00
	20	6.75	3.21	7.08	3.10	7.62	2.97	7.94	2.88	9.09	2.62	10.00	2.40	11.50	2.40	12.00	2.00	12.16	1.97	12.43	1.92	12.70	1.87

NOTE

- *CAP: Capacity at compressor maximum frequency. Capacity is valid for difference between water inlet and water outlet of 3-8ºC.*
- *IPT: Total input power.*

The table above shows the input power (IPT) at maximum capacity (CAP). Most of the time, the unit will run at partial load, so that the actual input power will be lower.

3.2.2 Maximum cooling capacity table (kW)

System	Water outlet temp (ºC)	Ambient temperature (ºC WB)																							
		10			15			20			25			30			35			40			45		
		CAP (kW)	IPT (kW)	EER (kW)	CAP (kW)	IPT (kW)	EER (kW)	CAP (kW)	IPT (kW)	EER (kW)	CAP (kW)	IPT (kW)	EER (kW)	CAP (kW)	IPT (kW)	EER (kW)	CAP (kW)	IPT (kW)	EER (kW)	CAP (kW)	IPT (kW)	EER (kW)	CAP (kW)	IPT (kW)	EER (kW)
RAS-2WHVRP+RWD-2.0NRW(S)E-(200/260)S(-K)(-W)	22										7.40	0.95	7.80	6.93	1.03	6.74	6.45	1.11	5.83	5.98	1.19	5.04	5.50	1.26	4.35
	18							7.50	0.96	7.80	7.10	0.97	7.30	6.80	1.08	6.30	6.40	1.21	5.30	5.75	1.27	4.54	5.10	1.32	3.85
	15	7.00	0.97	7.20	6.92	0.99	7.02	6.83	1.00	6.84	6.75	1.01	6.67	6.27	1.10	5.68	5.79	1.19	4.84	5.31	1.29	4.13	4.83	1.38	3.50
	10	6.80	0.97	7.00	6.58	1.01	6.54	6.37	1.04	6.12	6.15	1.08	5.72	5.71	1.17	4.86	5.26	1.27	4.14	4.82	1.37	3.52	4.37	1.47	2.98
	7	6.20	0.98	6.30	6.10	1.03	5.94	6.00	1.07	5.60	5.80	1.12	5.20	5.40	1.23	4.40	5.00	1.33	3.75	4.55	1.43	3.19	4.10	1.52	2.70
	5				5.50	1.08	5.10	5.20	1.17	4.46	4.90	1.26	3.90	4.60	1.34	3.42	4.30	1.43	3.00	4.00	1.52	2.63	3.70	1.61	2.30
RAS-2.5WHVRP+RWD-2.5NRW(S)E-(200/260)S(-K)(-W)	22										8.70	1.19	7.30	8.10	1.27	6.38	7.50	1.35	5.57	6.90	1.42	4.85	6.30	1.50	4.20
	18							8.50	1.21	7.00	8.30	1.24	6.70	7.90	1.36	5.80	7.20	1.48	4.85	6.60	1.58	4.19	6.00	1.67	3.60
	15	8.10	1.25	6.50	8.03	1.26	6.39	7.96	1.27	6.28	7.89	1.28	6.17	7.35	1.39	5.29	6.81	1.50	4.54	6.27	1.61	3.90	5.73	1.72	3.34
	10	7.60	1.25	6.10	7.47	1.28	5.84	7.34	1.31	5.59	7.21	1.35	5.35	6.73	1.46	4.60	6.24	1.57	3.96	5.76	1.69	3.41	5.27	1.80	2.93
	7	7.10	1.31	5.40	7.00	1.34	5.23	6.90	1.36	5.06	6.80	1.39	4.90	6.30	1.58	4.00	6.00	1.74	3.45	5.50	1.80	3.06	5.00	1.85	2.70
	5				6.80	1.36	5.00	6.43	1.49	4.32	6.07	1.62	3.75	5.70	1.75	3.26	5.33	1.88	2.84	4.97	2.01	2.47	4.60	2.14	2.15
RAS-3WHVRP+RWD-3.0NRW(S)E-(200/260)S(-K)(-W)	22										10.50	1.67	6.30	9.90	1.73	5.72	9.30	1.80	5.17	8.70	1.86	4.67	8.10	1.93	4.20
	18							10.60	1.64	6.45	10.20	1.71	5.95	9.50	1.84	5.15	9.00	1.94	4.65	8.00	1.98	4.04	7.00	2.03	3.45
	15	9.50	1.40	6.80	9.52	1.52	6.26	9.55	1.65	5.80	9.57	1.77	5.40	8.86	1.87	4.75	8.15	1.96	4.16	7.44	2.05	3.63	6.73	2.14	3.14
	10	8.80	1.44	6.10	8.71	1.58	5.50	8.62	1.73	4.99	8.53	1.87	4.56	7.96	1.99	4.01	7.40	2.10	3.52	6.84	2.22	3.08	6.27	2.33	2.69
	7	8.10	1.56	5.20	8.03	1.68	4.78	7.97	1.80	4.42	7.90	1.93	4.10	7.60	2.05	3.70	7.00	2.19	3.20	6.50	2.32	2.80	6.00	2.45	2.45
	5				8.00	1.74	4.60	7.68	1.86	4.12	7.35	1.99	3.70	7.03	2.11	3.33	6.70	2.23	3.00	6.15	2.45	2.51	5.60	2.67	2.10

NOTE

- *CAP: Capacity at compressor maximum frequency. Capacity is valid for difference between water inlet and water outlet of 3-8ºC.*
- *IPT: Total input power.*

3.3 YUTAKI M

3.3.1 Maximum heating capacity table (kW) (Integrated)

		Ambient temperature (ºC WB)																					
		-20		-15		-10		-7		-2		2		7		12		15		20		25	
System	Water outlet temp (ºC)	CAP (kW)	IPT (kW)	CAP (kW)	IPT (kW)	CAP (kW)	IPT (kW)	CAP (kW)	IPT (kW)	CAP (kW)	IPT (kW)	CAP (kW)	IPT (kW)	CAP (kW)	IPT (kW)	CAP (kW)	IPT (kW)	CAP (kW)	IPT (kW)	CAP (kW)	IPT (kW)	CAP (kW)	IPT (kW)
RASM-2VRE	60							3.20	2.29	3.64	2.25	4.00	2.22	5.00	2.17	5.50	1.77	5.66	1.71	5.93	1.61	6.20	1.51
	55					4.00	2.42	4.20	2.27	4.48	2.25	4.70	2.24	6.00	2.22	6.30	1.80	6.46	1.68	6.73	1.48	7.00	1.27
	50					4.36	2.32	4.60	2.22	4.85	2.13	5.05	2.05	6.15	2.01	6.65	1.71	6.85	1.61	7.17	1.43	7.50	1.25
	45	4.00	2.35	4.25	2.30	4.72	2.22	5.00	2.17	5.22	2.00	5.40	1.86	6.30	1.80	7.00	1.63	7.23	1.54	7.62	1.38	8.00	1.23
	40	4.15	2.34	4.54	2.24	4.93	2.14	5.17	2.08	5.32	1.86	5.45	1.70	6.40	1.59	7.25	1.48	7.48	1.42	7.87	1.31	8.25	1.21
	35	4.30	2.32	4.50	2.14	5.02	2.04	5.33	1.98	5.42	1.73	5.49	1.53	6.50	1.38	7.50	1.34	7.73	1.30	8.12	1.24	8.50	1.18
	30	4.50	2.23	4.80	2.09	5.31	1.93	5.62	1.83	5.69	1.65	5.75	1.50	6.70	1.34	7.75	1.30	7.98	1.27	8.37	1.20	8.75	1.14
	25	4.70	2.14	5.10	2.04	5.60	1.82	5.90	1.68	5.95	1.56	6.00	1.46	6.90	1.30	8.00	1.27	8.23	1.23	8.62	1.16	9.00	1.09
	20	4.90	2.04	5.40	1.99	5.89	1.71	6.18	1.54	6.22	1.48	6.25	1.43	7.10	1.26	8.25	1.24	8.48	1.19	8.87	1.12	9.25	1.05
RASM-3VRE	60							5.10	3.64	5.77	3.46	6.31	3.32	7.50	3.21	8.00	2.76	8.12	2.73	8.31	2.70	8.50	2.66
	55					5.30	3.53	5.50	3.44	6.42	3.42	7.15	3.40	9.00	3.30	9.80	3.11	9.85	3.07	9.92	3.01	10.00	2.94
	50					5.80	3.39	6.08	3.31	6.83	3.24	7.43	3.18	9.15	3.08	9.90	2.91	10.03	2.88	10.24	2.83	10.45	2.78
	45	5.25	3.39	5.70	3.35	6.30	3.24	6.67	3.18	7.24	3.06	7.70	2.96	9.30	2.86	10.00	2.70	10.21	2.68	10.55	2.66	10.90	2.63
	40	5.63	3.36	6.19	3.27	6.75	3.17	7.08	3.12	7.64	2.96	8.09	2.83	10.15	2.77	10.75	2.60	10.88	2.59	11.09	2.56	11.30	2.53
	35	6.00	3.33	6.25	3.29	7.03	3.14	7.50	3.06	8.04	2.85	8.47	2.69	10.99	2.68	11.50	2.50	11.55	2.49	11.62	2.46	11.70	2.44
	30	6.25	3.29	6.52	3.23	7.23	3.08	7.65	3.00	8.36	2.77	8.94	2.58	11.15	2.57	11.65	2.32	11.70	2.30	11.77	2.26	11.85	2.22
	25	6.50	3.25	6.80	3.16	7.42	3.02	7.80	2.94	8.69	2.68	9.40	2.48	11.30	2.46	11.80	2.15	11.85	2.11	11.92	2.06	12.00	2.00
	20	6.75	3.21	7.08	3.10	7.62	2.97	7.94	2.88	9.09	2.62	10.00	2.40	11.50	2.40	12.00	2.00	12.16	1.97	12.43	1.92	12.70	1.87

NOTE

- *CAP: Capacity at maximum compressor frequency (kW). Capacity is valid for difference between water inlet and water outlet of 3-8 ºC.*
- *IPT: Total input power (kW)*

The table above shows the input power (IPT) at maximum capacity (CAP). Most of the time, the unit runs at partial load, so that the actual input is lower.

3.3.2 Maximum cooling capacity table (kW)

		Ambient temperature (ºC WB)																							
		10			15			20			25			30			35			40			45		
System	Water outlet temp (ºC)	CAP (kW)	IPT (kW)	EER (kW)	CAP (kW)	IPT (kW)	EER (kW)	CAP (kW)	IPT (kW)	EER (kW)	CAP (kW)	IPT (kW)	EER (kW)	CAP (kW)	IPT (kW)	EER (kW)	CAP (kW)	IPT (kW)	EER (kW)	CAP (kW)	IPT (kW)	EER (kW)	CAP (kW)	IPT (kW)	EER (kW)
RASM-2VRE	22										7.40	0.95	7.80	6.93	1.03	6.74	6.45	1.11	5.83	5.98	1.19	5.04	5.50	1.26	4.35
	18							7.50	0.96	7.80	7.10	0.97	7.30	6.80	1.08	6.30	6.40	1.21	5.30	5.75	1.27	4.54	5.10	1.32	3.85
	15	7.00	0.97	7.20	6.92	0.99	7.02	6.83	1.00	6.84	6.75	1.01	6.67	6.27	1.10	5.68	5.79	1.19	4.84	5.31	1.29	4.13	4.83	1.38	3.50
	10	6.80	0.97	7.00	6.58	1.01	6.54	6.37	1.04	6.12	6.15	1.08	5.72	5.71	1.17	4.86	5.26	1.27	4.14	4.82	1.37	3.52	4.37	1.47	2.98
	7	6.20	0.98	6.30	6.10	1.03	5.94	6.00	1.07	5.60	5.80	1.12	5.20	5.40	1.23	4.40	5.00	1.33	3.75	4.55	1.43	3.19	4.10	1.52	2.70
	5				5.50	1.08	5.10	5.20	1.17	4.46	4.90	1.26	3.90	4.60	1.34	3.42	4.30	1.43	3.00	4.00	1.52	2.63	3.70	1.61	2.30
RASM-3VRE	22										10.50	1.67	6.30	9.90	1.73	5.72	9.30	1.80	5.17	8.70	1.86	4.67	8.10	1.93	4.20
	18							10.60	1.64	6.45	10.20	1.71	5.95	9.50	1.84	5.15	9.00	1.94	4.65	8.00	1.98	4.04	7.00	2.03	3.45
	15	9.50	1.40	6.80	9.52	1.52	6.26	9.55	1.65	5.80	9.57	1.77	5.40	8.86	1.87	4.75	8.15	1.96	4.16	7.44	2.05	3.63	6.73	2.14	3.14
	10	8.80	1.44	6.10	8.71	1.58	5.50	8.62	1.73	4.99	8.53	1.87	4.56	7.96	1.99	4.01	7.40	2.10	3.52	6.84	2.22	3.08	6.27	2.33	2.69
	7	8.10	1.56	5.20	8.03	1.68	4.78	7.97	1.80	4.42	7.90	1.93	4.10	7.60	2.05	3.70	7.00	2.19	3.20	6.50	2.32	2.80	6.00	2.45	2.45
	5				8.00	1.74	4.60	7.68	1.86	4.12	7.35	1.99	3.70	7.03	2.11	3.33	6.70	2.23	3.00	6.15	2.45	2.51	5.60	2.67	2.10

NOTE

- *CAP: Capacity at compressor maximum frequency. Capacity is valid for difference between water inlet and water outlet of 3-8ºC.*
- *IPT: Total input power.*

3.4 Correction factors

3.4.1 Piping length correction factor

The correction factor is based on the equivalent piping length in metres (EL) and the height difference between outdoor unit and indoor unit in metres (H).

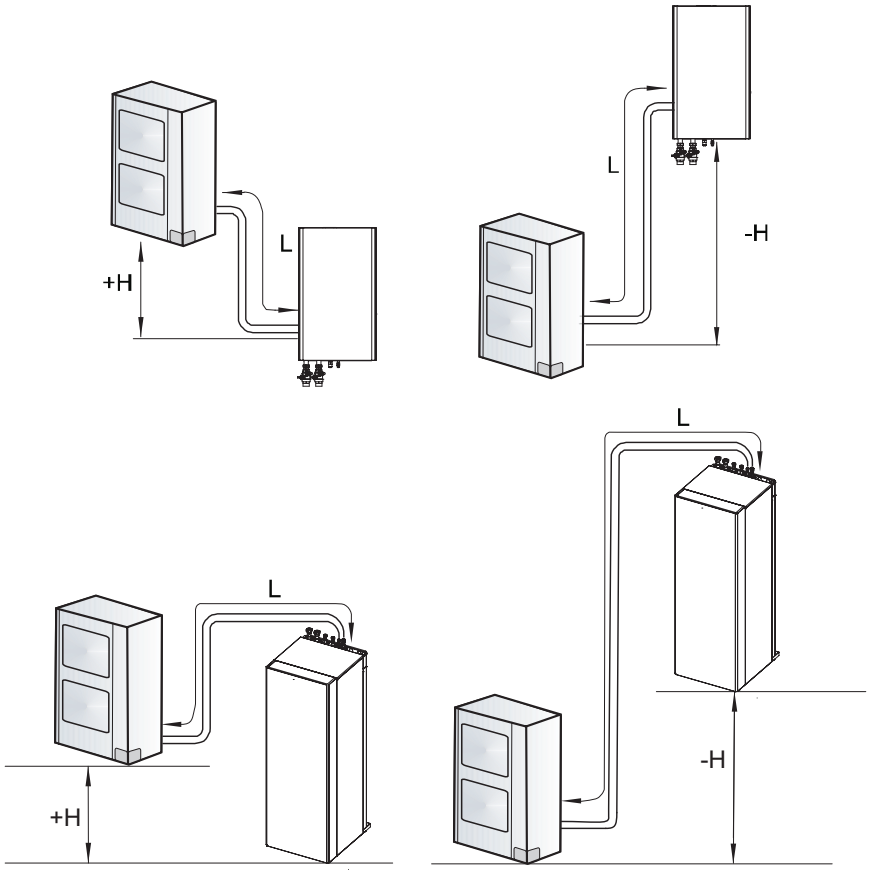

H: Height difference between indoor unit and outdoor unit (m).

- H>0: Outdoor unit is placed higher than indoor unit (m).
- H<0: Outdoor unit is placed lower than indoor unit (m).

L: Actual one-way piping length between indoor unit and outdoor unit (m).

EL: Equivalent one-way piping length between indoor unit and outdoor unit (m).

- One 90º elbow is 0.5 m.
- One 180º bend is 1.5 m.

◆ Heating piping length correction factor

Heating

RAS-2WHVRP

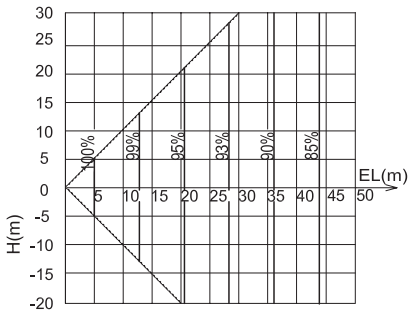

RAS-2.5WHVRP

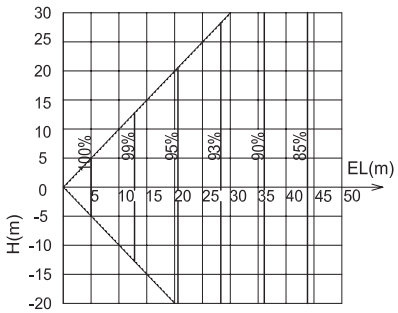

RAS-3WHVRP

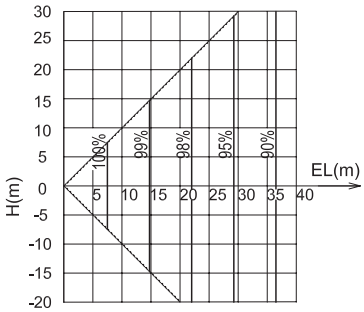

◆ Cooling piping length correction factor

Cooling

RAS-2WHVRP

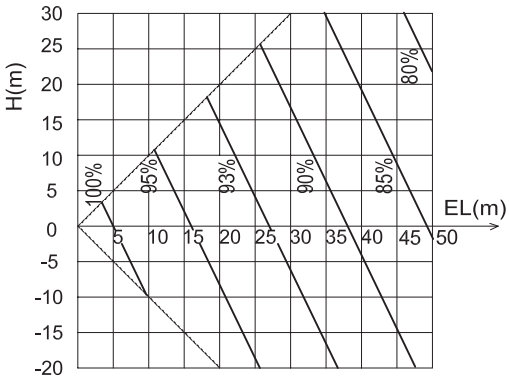

RAS-2.5WHVRP

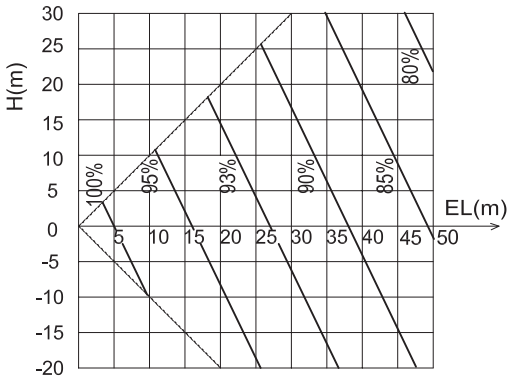

RAS-3WHVRP

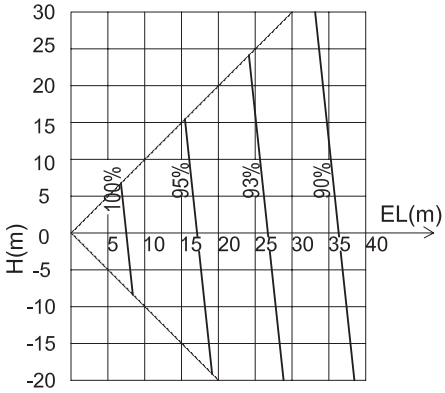

3.4.2 Correction factor owing to use of glycol (only for YUTAKI M)

◆ Application at low ambient temperature

When the ambient temperature is low in winter, the water in the pipes and circulating pump may freeze and damage the pipes and water pumps during shutdown periods.

To prevent this, it is useful to drain the water from the installation or not to cut off the power supply of the installation, as an electrical cable can prevent the water from freezing in the circuit.

In addition, in cases where it is difficult to drain the water, it is advisable to use a mixture with antifreeze glycol (ethylene or propylene at a concentration between 10% and 40%).

Unit performance may be reduced when operating with glycol, depending on the percentage of glycol used, since glycol is denser than water.

Two tables are shown below (one for ethylene glycol and the other for propylene glycol), indicating the percentage of ethylene glycol recommended for diverse values of outdoor air inlet temperature, with their respective correction factors.

Corrected heating capacity = capacity correction factor owing to use of glycol × heating capacity

- Ethylene glycol

Ambient Temperature	DB (°C)	-3	-7	-13	-22
Percentage of glycol required	%	10	20	30	40
Capacity correction factor	f_{gh}	1.00	1.00	0.99	0.99
Consumed power correction factor	f_{gi}	1.01	1.02	1.03	1.04
Flow rate correction factor	f_{gc}	1.01	1.01	1.02	1.04
Pressure loss correction factor	f_{gp}	1.03	1.09	1.16	1.26

- Propylene glycol

Ambient Temperature	DB (°C)	-3	-7	-13	-22
Percentage of glycol required	%	10	20	30	40
Capacity correction factor	f_{gh}	1.00	1.00	0.99	0.99
Consumed power correction factor	f_{gi}	1.01	1.02	1.03	1.04
Flow rate correction factor	f_{gc}	1.02	1.02	1.04	1.07
Pressure loss correction factor	f_{gp}	1.24	1.31	1.39	1.51

⚠ CAUTION

The use of glycol affect to the reading of some parameters like “water flow level” and “capacity” shown through the unit controller menu. When glycol is used, these data are not correct and must be not used.

4. Acoustic characteristic curves

Index

4.1 Considerations 68

4.2 Sound pressure level for Outdoor unit and YUTAKI M 69

4.1 Considerations

1 Distance of the unit from the measuring point: At 1 meter from the unit's front surface; 1,5 meter from floor level.

Outdoor unit

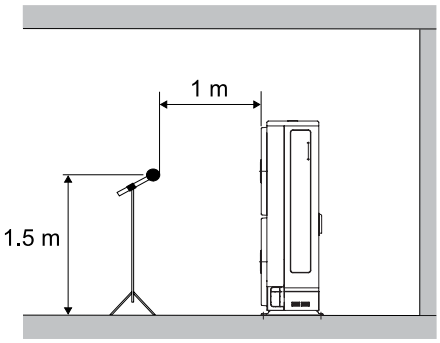

2 The data is measured in an anechoic chamber, so reflected sound should be taken into consideration when installing the unit.

3 The sound measured with the curve A shown in dB(A) represents the attenuation in function of frequency as perceived by the human ear.

4 Reference acoustic pressure 0 dB=20 μPa

4.2 Sound pressure level for Outdoor unit and YUTAKI M

RAS-2WHVRP

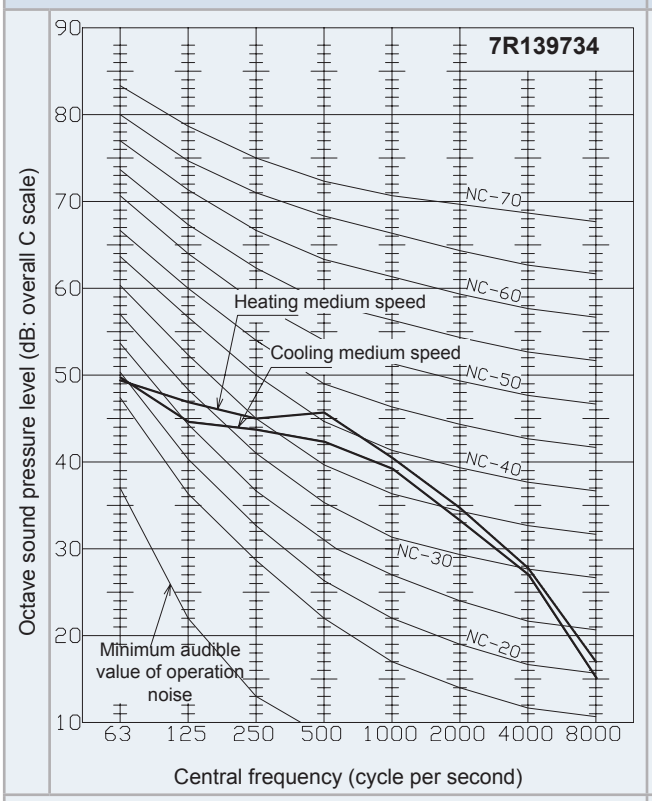

Cooling/Heating: 44/46 dB(A)

RAS-2.5WHVRP

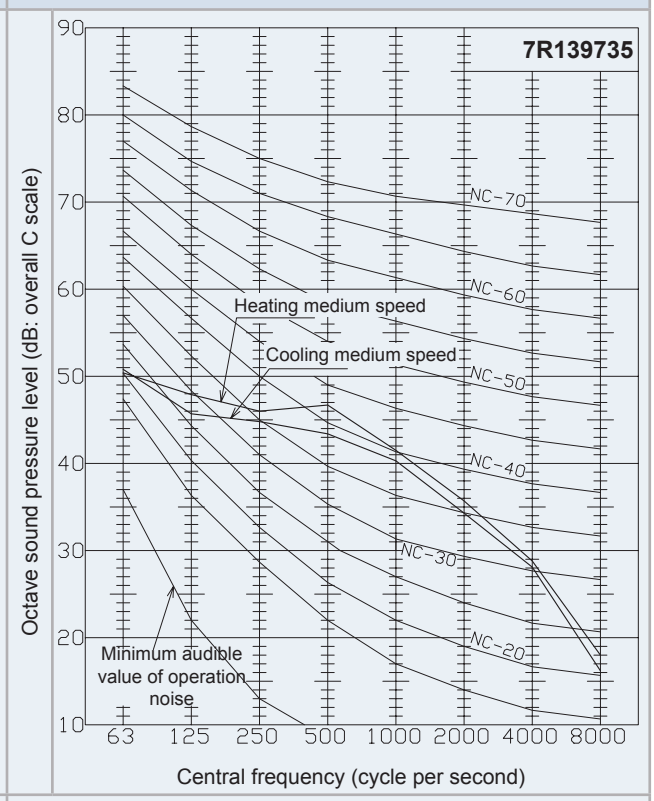

Cooling/Heating: 45/47 dB(A)

RAS-3WHVRP

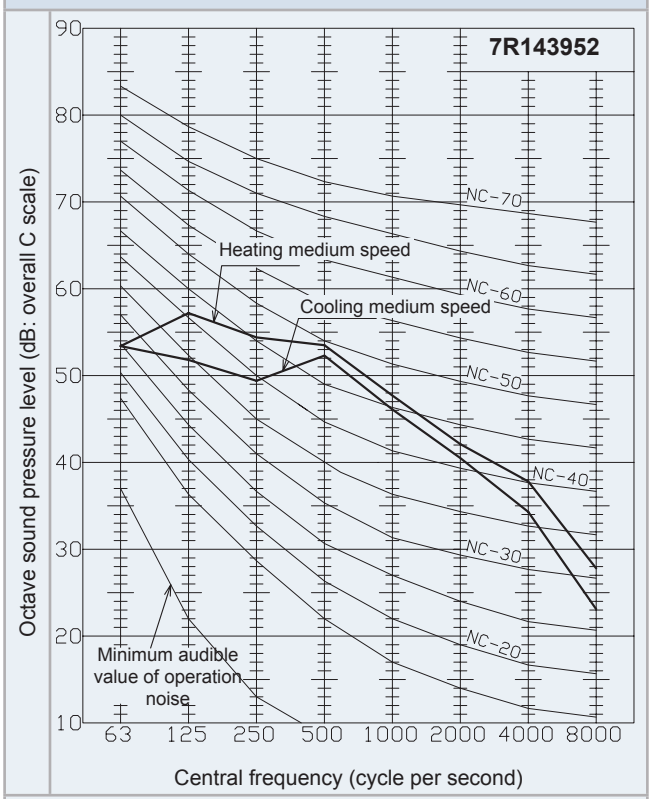

Cooling/Heating: 52/54 dB(A)

4

RASM-2VRE	RASM-3VRE
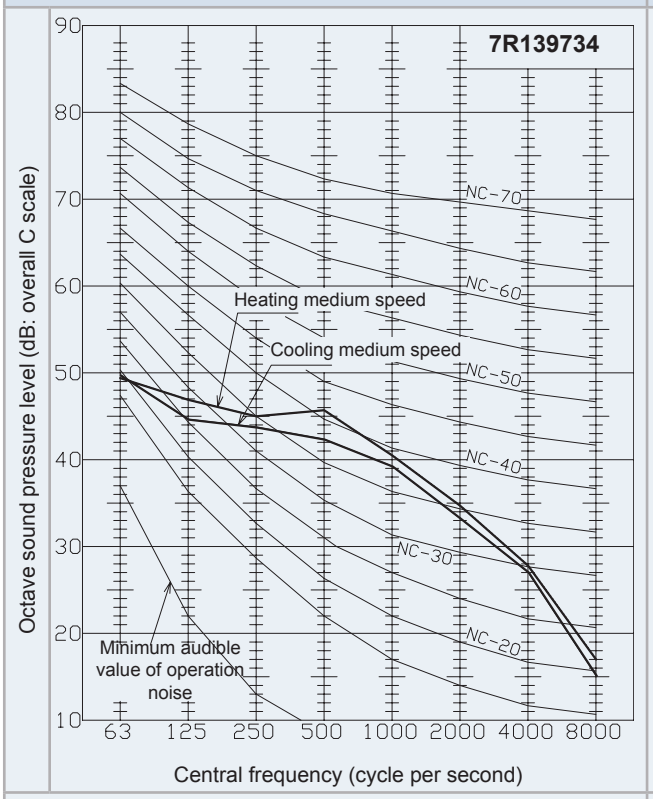	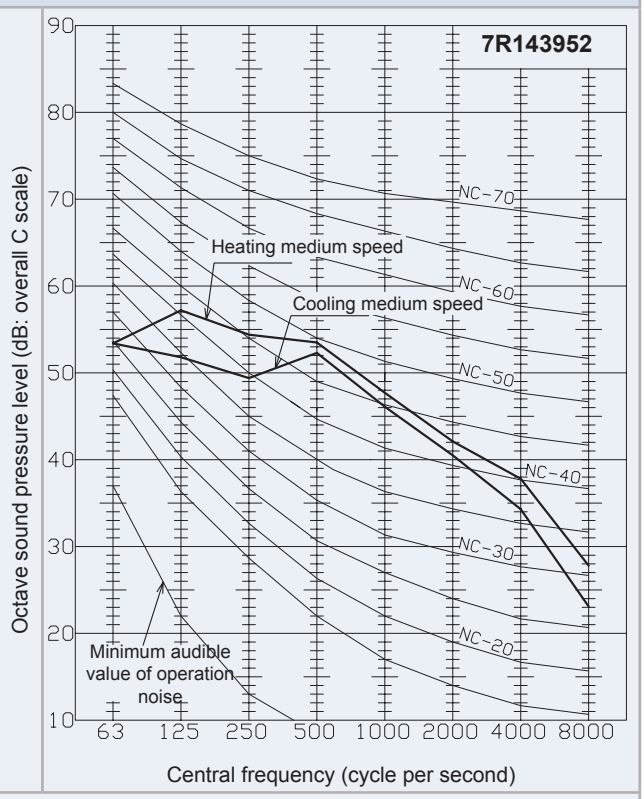
Cooling/Heating: 44/46 dB(A)	Cooling/Heating: 52/54 dB(A)

HITACHI

5. Working range

Index

5.1 Power supply working range 72

5.2 Temperature working range 72

5.2.1 Space heating 72

5.2.2 DHW 73

5.2.3 Swimming pool heating 74

5.2.4 Space cooling (Necessary cooling kit) 74

5.3 Hydraulic working range 75

5.3.1 Hydraulic data 75

5.3.2 Pump performance curves 76

5.1 Power supply working range

◆ Nominal power supply

- Single phase: 1~ 230V 50Hz

◆ Operating voltage

Between 90 and 110% of the nominal voltage.

◆ Starting voltage

Always higher than 85% of the nominal voltage.

5.2 Temperature working range

MODEL		2.0HP	2.5HP	3.0HP
Water temperature	ºC	Refer to the graphics for each case		
Indoor ambient temperature		5~30		

5.2.1 Space heating

◆ YUTAKI (S / S COMBI)

(2.0~3.0)HP

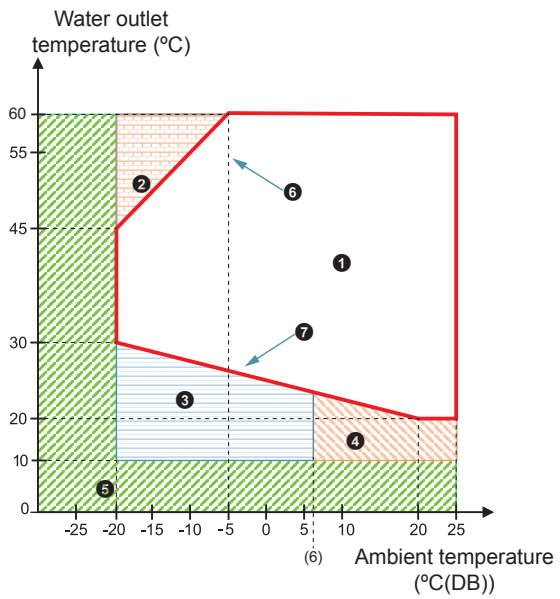

❶ Continuous working range.
❷ Operation not possible.
❸ Starting heat pump + Back-up heater.
❹ Starting Heat Pump.
❺ Starting only Back-up Heater operation.
❻ Maximum setting temperature.
❼ Minimum setting temperature.

NOTE

Items ❸ and ❺ only available if back-up heater is enabled.

◆ YUTAKI M

(2.0/3.0)HP

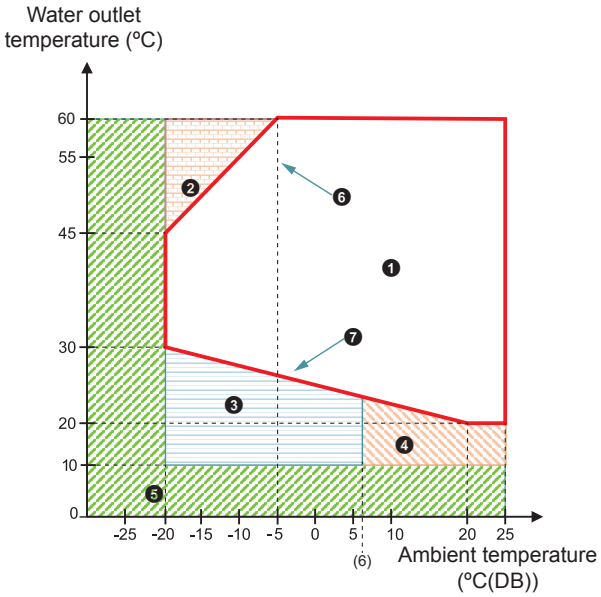

❶ Continuous working range.
❷ Operation not possible.
❸ Starting heat pump + Back-up heater.
❹ Starting Heat Pump.
❺ Starting only Back-up Heater operation.
❻ Maximum setting temperature.
❼ Minimum setting temperature.

NOTE

Items ❸ and ❺ only available if back-up heater is installed as an accessory

5.2.2 DHW

◆ For YUTAKI (S /S COMBI)

(2.0~3.0)HP

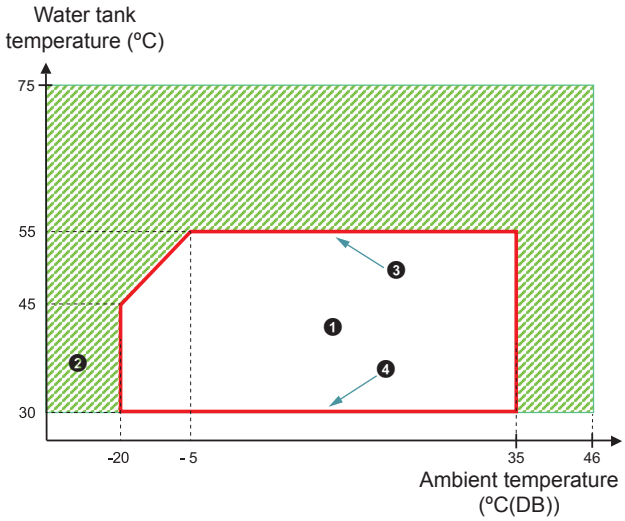

❶ Continuous working range.
❷ Starting only Back-up Heater operation.
❸ Maximum setting temperature.
❹ Minimum setting temperature.

NOTE

In case of heating up the DHW tank with an outdoor ambient temperature lower than -5 ºC and without using the DHW electrical heater, the setting temperature must not exceed the maximum value in the specified continuous working range.

◆ For YUTAKI M

(2.0/3.0)HP

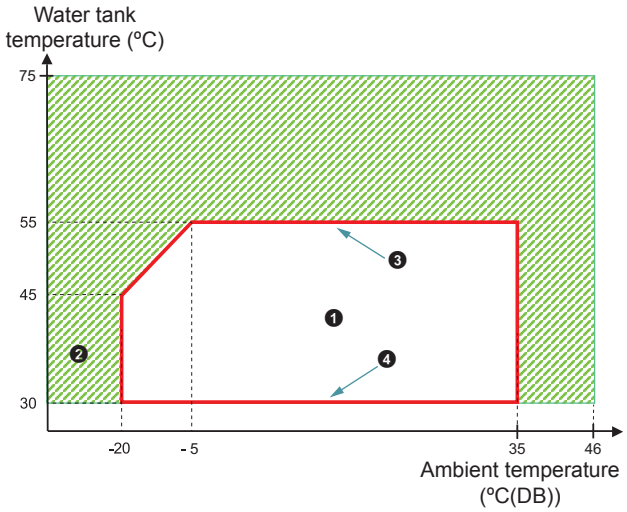

❶ Continuous working range.
❷ Starting only Back-up Heater operation.
❸ Maximum setting temperature.
❹ Minimum setting temperature.

NOTE

In case of heating up the DHW tank with an outdoor ambient temperature lower than -5 ºC and without using the DHW electrical heater, the setting temperature must not exceed the maximum value in the specified continuous working range.

5.2.3 Swimming pool heating

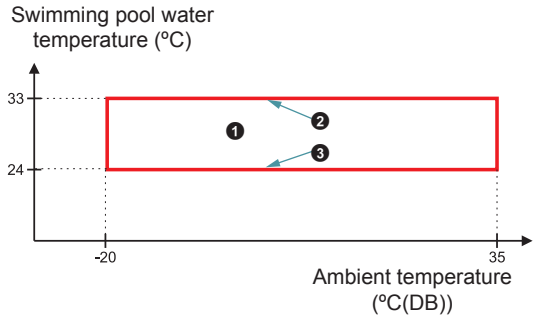

❶ Continuous working range.
❷ Maximum setting temperature.
❸ Minimum setting temperature.

5.2.4 Space cooling (Necessary cooling kit)

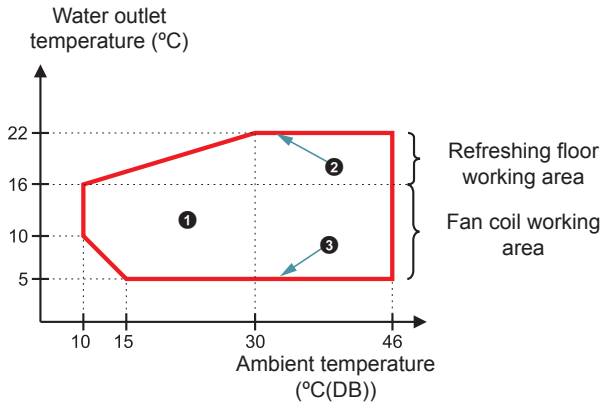

❶ Continuous working range.
❷ Maximum setting temperature.
❸ Minimum setting temperature.

5.3 Hydraulic working range

5.3.1 Hydraulic data

◆ YUTAKI S

MODEL		2.0 HP	2.5 HP	3.0 HP
Minimum water flow rate (*1)	m^3/h	0.5	0.6	0.6
Maximum water flow rate (*1)	m^3/h	1.9	2.0	2.1
Minimum installation water volume	l	28	28	28
Minimum allowable water pressure	MPa	0.1		
Maximum allowable water pressure	MPa	0.3		

◆ YUTAKI S COMBI

MODEL		2.0 HP	2.5 HP	3.0 HP
Minimum water flow rate (*1)	m^3/h	0.5	0.6	0.6
Maximum water flow rate (*1)	m^3/h	1.8	1.9	1.9
Minimum installation water volume	l	28	28	28
Minimum allowable water pressure	MPa	0.1		
Maximum allowable water pressure	MPa	0.3		

◆ YUTAKI M

MODEL		2.0 HP	3.0 HP
Minimum water flow rate (*1)	m^3/h	0.5	0.6
Maximum water flow rate (*1)	m^3/h	1.9	2.1
Minimum installation water volume	l	28	28
Minimum allowable water pressure	MPa	0.1	
Maximum allowable water pressure	MPa	0.3	

NOTE

*(*1): Values calculated based on a ΔT (inlet/outlet): 3~8 ºC*

5.3.2 Pump performance curves

NOTE

If a water flow rate is selected out of the working range of the unit, it can cause malfunction on the unit. Please, try to operate the pump within the minimum and maximum water flow of the indoor unit.

◆ YUTAKI S

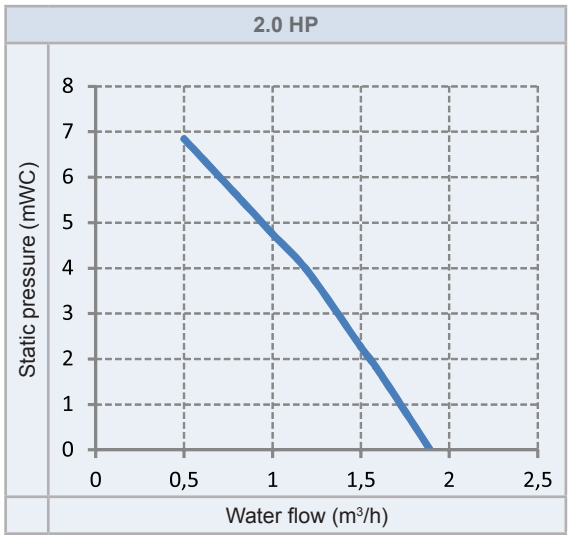

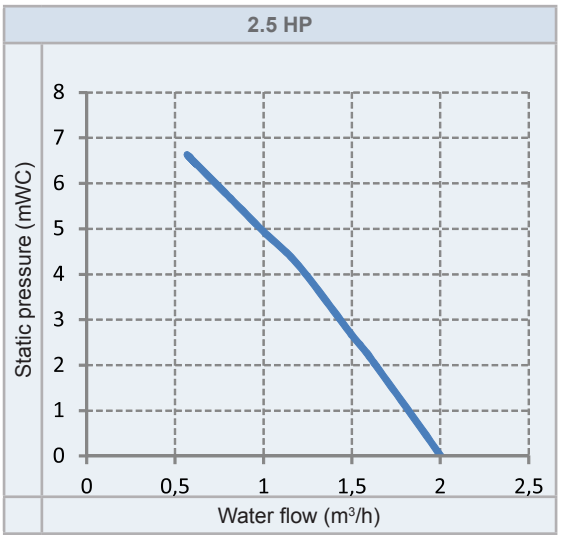

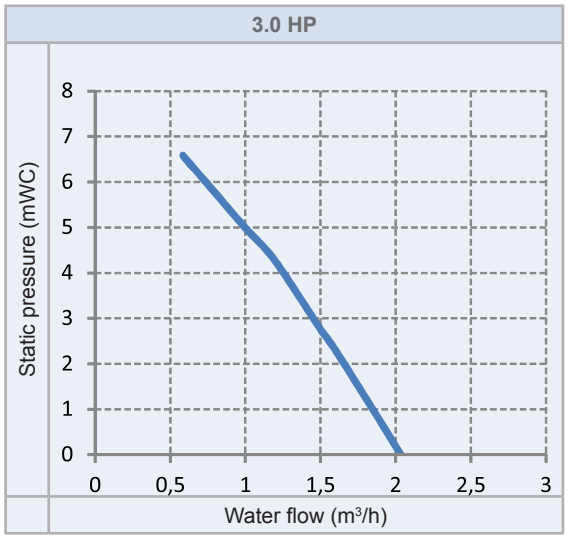

◆ YUTAKI S COMBI

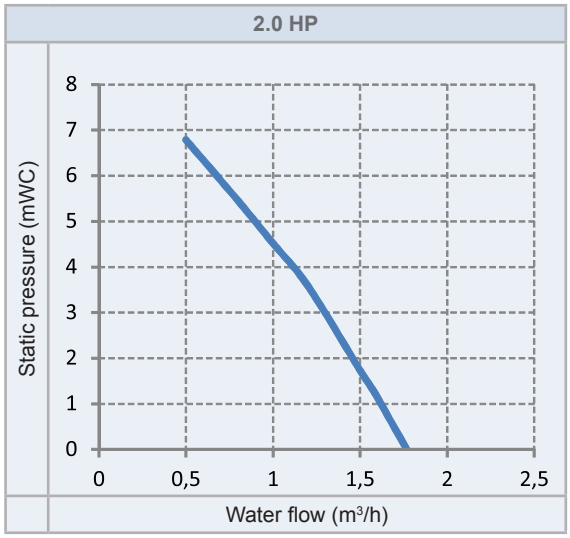

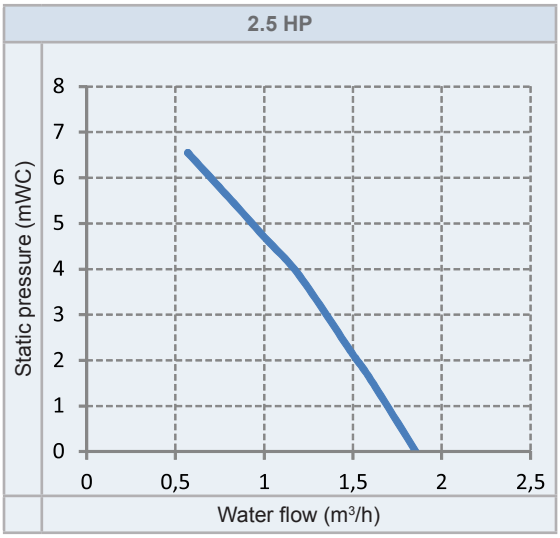

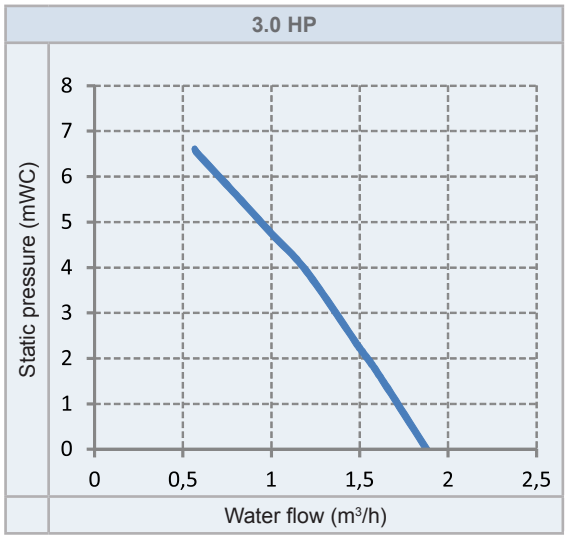

◆ YUTAKI M

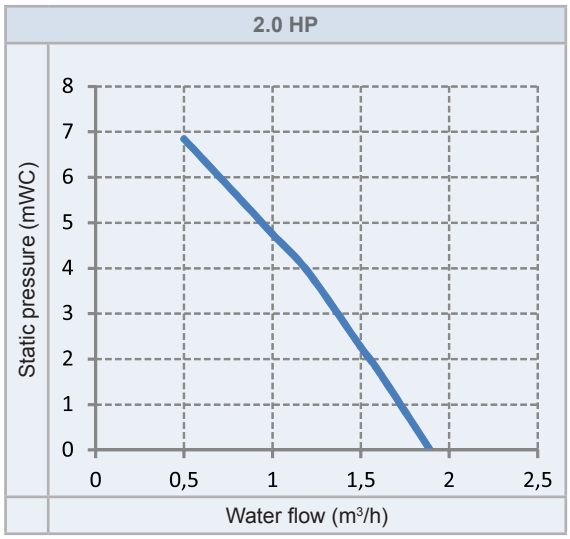

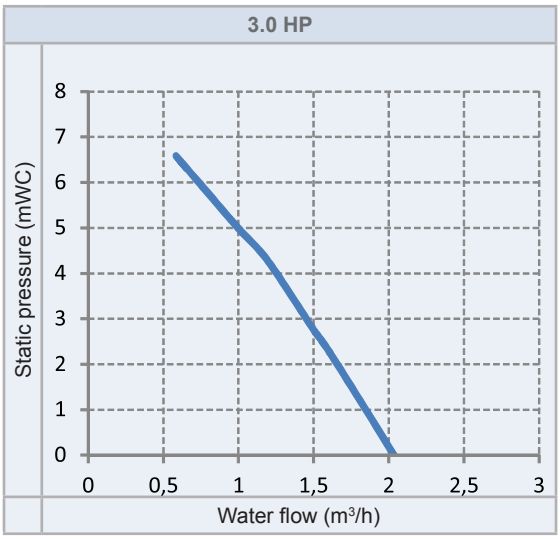

HITACHI

6. General dimensions

Index

6.1 Name of parts and Dimensional data 80
6.1.1 Split system - Outdoor unit 80
6.1.2 Split system - Indoor unit 81
6.1.2.1 YUTAKI S 81
6.1.2.2 YUTAKI S COMBI 82
6.1.3 Monobloc system - YUTAKI M 87
6.2 Service space 88
6.2.1 Split system - Outdoor unit 88
6.2.2 Split system - Indoor unit 88
6.2.2.1 YUTAKI S 88
6.2.2.2 YUTAKI S COMBI 89
6.2.3 Monobloc system - YUTAKI M 90

6.1 Name of parts and Dimensional data

6.1.1 Split system - Outdoor unit

◆ **RAS-(2-3)WHVRP**

Dimension / Model	a	b	c	d	e
RAS-2WHVRP	22.5	109	129	12.7	6.35
RAS-2.5WHVRP	22.5	109	129	12.7	6.35
RAS-3WHVRP	26.5	103	127.5	15.88	9.52

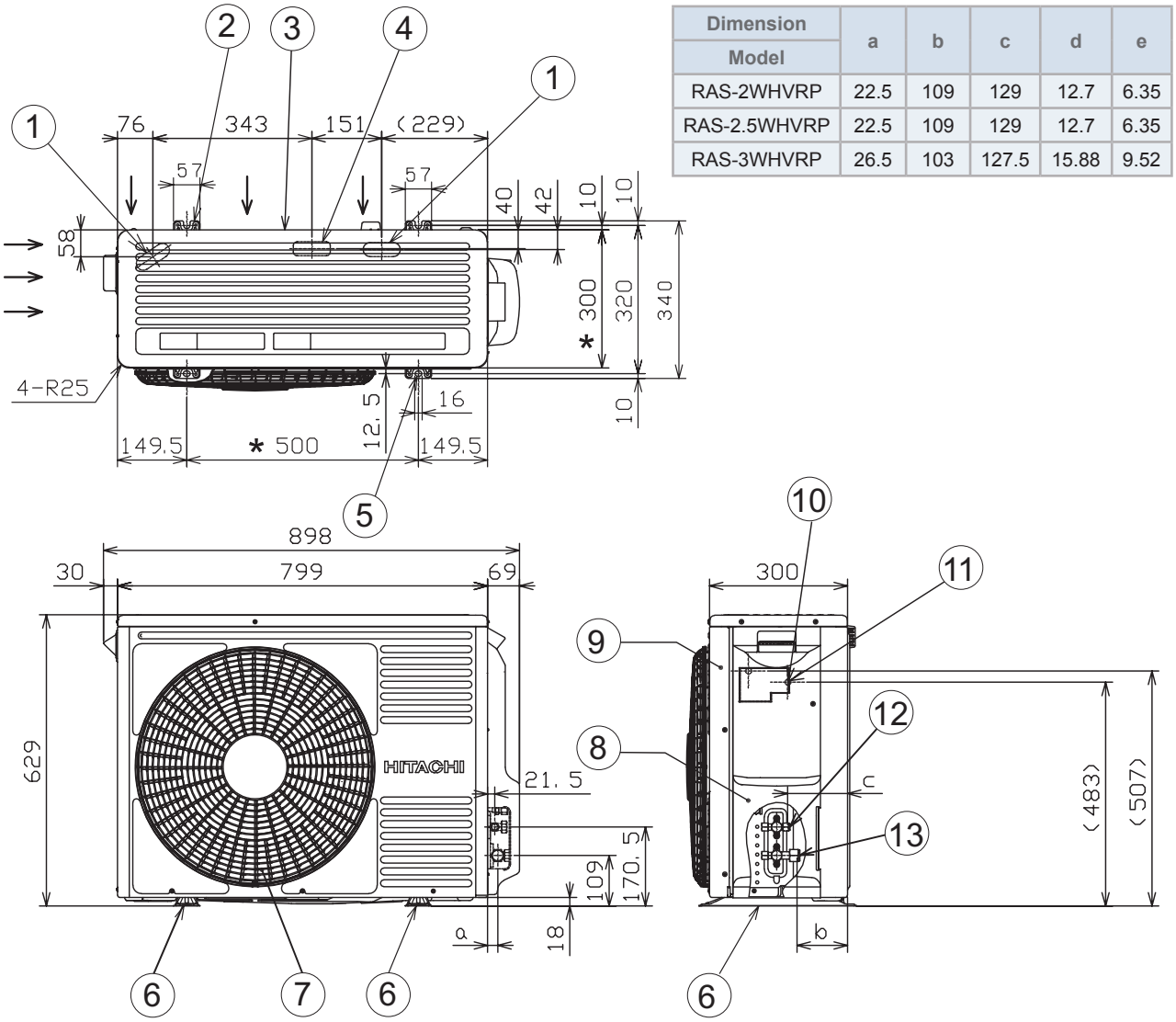

Units: mm

NOTE

*The dimensions with the * mark indicate the pitch dimension of the holes for attachment of anchor bolts.*

Nº	Description	Remarks
1	Punched drain hole for bush	30x80 long hole
2	Attachment hole for M10 anchor bolt	2-U cut hole
3	Air suction inlet	—
4	Punched drain hole	For drain pipe
5	Attachment hole for M10 anchor bolt	2-Long hole
6	Foot part	
7	Air discharge outlet	—
8	Pipe cover	—
9	Service cover	—
10	Terminal board for power supply and transmission Terminal screw of power supply wire (M5) Terminal screw of transmission wire (M4)	—
11	Terminal screw of earth wire (M5)	—
12	Connection of refrigerant liquid pipe	With flare nut for Øe copper pipe
13	Connection of refrigerant gas pipe	With flare nut for Ød copper pipe

6.1.2 Split system - Indoor unit

6.1.2.1 YUTAKI S

◆ **RWM-(2.0-3.0)NRE(-W)**

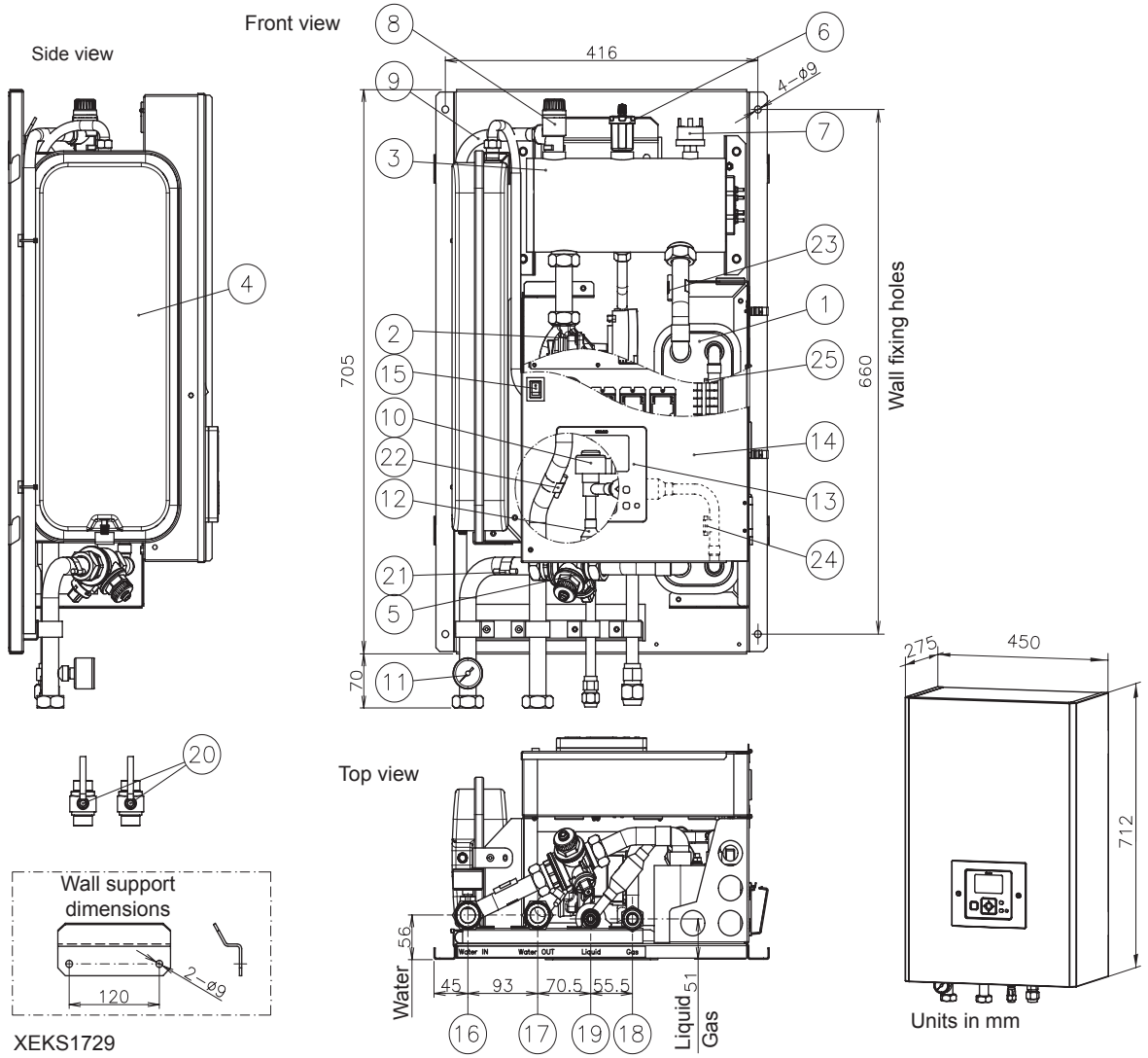

Nº	Part name	Nº	Part name
1	Plate heat exchanger	13	Unit controller (Except (-W) models)
2	Water pump	14	Electrical box
3	Electric water heater	15	Switch for DHW emergency operation
4	Expansion vessel 6L	16	Water inlet pipe connection - G 1” Female
5	Water strainer	17	Water outlet pipe connection - G 1” Female
6	Air purger	18	Refrigerant gas pipe connection - Ø15.88 (5/8”)
7	Water low pressure switch	19	Refrigerant liquid pipe connection 2.0HP: Ø6.35 (1/4”) 2.5/3.0HP: Ø9.52 (3/8”)
8	Safety valve	20	Shut-off valve (Factory-supplied accessory)
9	Drain pipe for safety valve	21	Thermistor (Water inlet pipe)
10	Expansion valve	22	Thermistor (Water outlet pipe)
11	Manometer	23	Thermistor (Water outlet PHEX)
12	Refrigerant strainer (x2)	24	Thermistor (Liquid refrigerant pipe)
		25	Thermistor (Gas refrigerant pipe)

6.1.2.2 YUTAKI S COMBI

◆ Standard model

RWD-(2.0-3.0)NRWE-200S(-W)

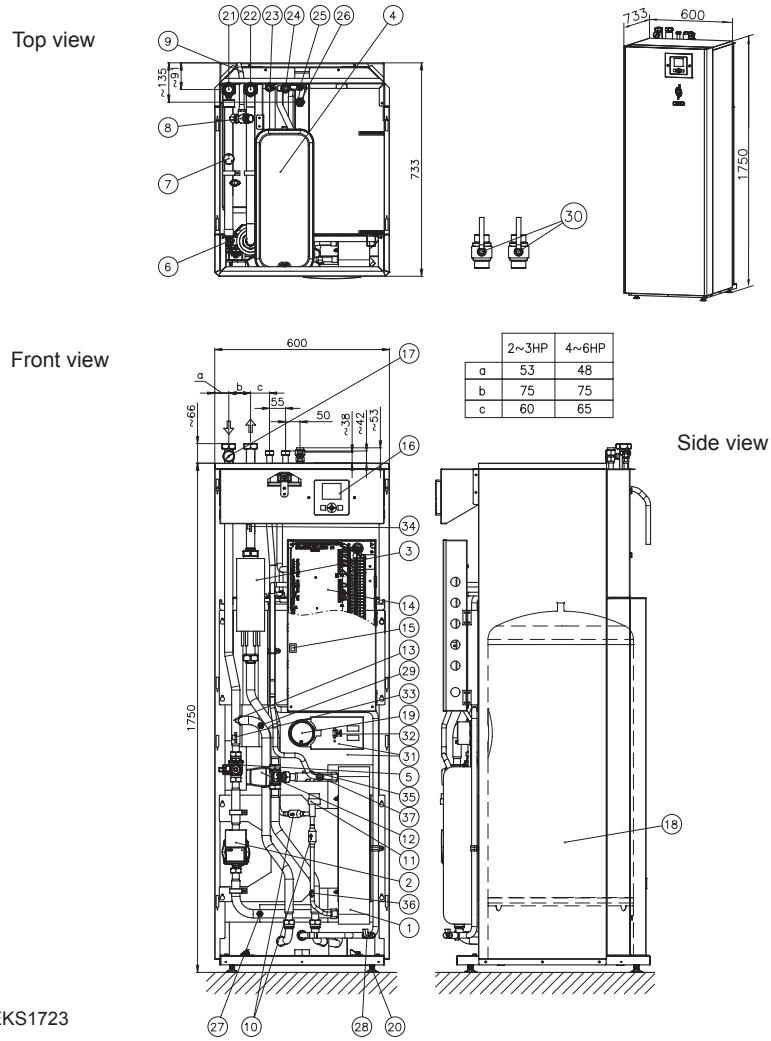

Nº	Part name	Nº	Part name
1	Plate heat exchanger	20	Mounting foot (x4)
2	Water pump	21	Water inlet pipe connection 2.0-3.0HP: G 1” female
3	Electric water heater	22	Water outlet pipe connection 2.0-3.0HP: G 1” female
4	Expansion vessel 6L	23	DHW inlet pipe connection - G 3/4” female
5	Water strainer	24	DHW outlet pipe connection - G 3/4” female
6	Air purger	25	Refrigerant liquid pipe connection 2.0HP: Ø 6.35 (1/4”) / 2.5~3HP: Ø9.52 (3/8”)
7	Low water pressure switch		
8	Safety valve	26	Refrigerant gas pipe connection - Ø15.88 (5/8”)
9	Drain pipe for safety valve	27	Drain port (For indoor unit water) - G 3/8”
10	Refrigerant strainer (x2)	28	Drain port (For DHW) - G 3/8”
11	Expansion valve	29	Manual air purger
12	3-way valve (for space heating and DHW)	30	Shutdown valve (Factory supplied accessory)
13	T-branch (for space heating and DHW)	31	Tank insulation
14	Electrical box	32	DHW thermistor
15	Switch for DHW emergency operation	33	Water inlet thermistor
16	Unit controller (Except (-W) models)	34	Water outlet thermistor
17	Manometer	35	Water outlet PHEX thermistor
18	DHW tank (200L)	36	Refrigerant liquid pipe thermistor
19	DHW tank heater+thermostat	37	Refrigerant gas pipe thermistor

RWD-(2.0-3.0)NRWE-260S(-W)

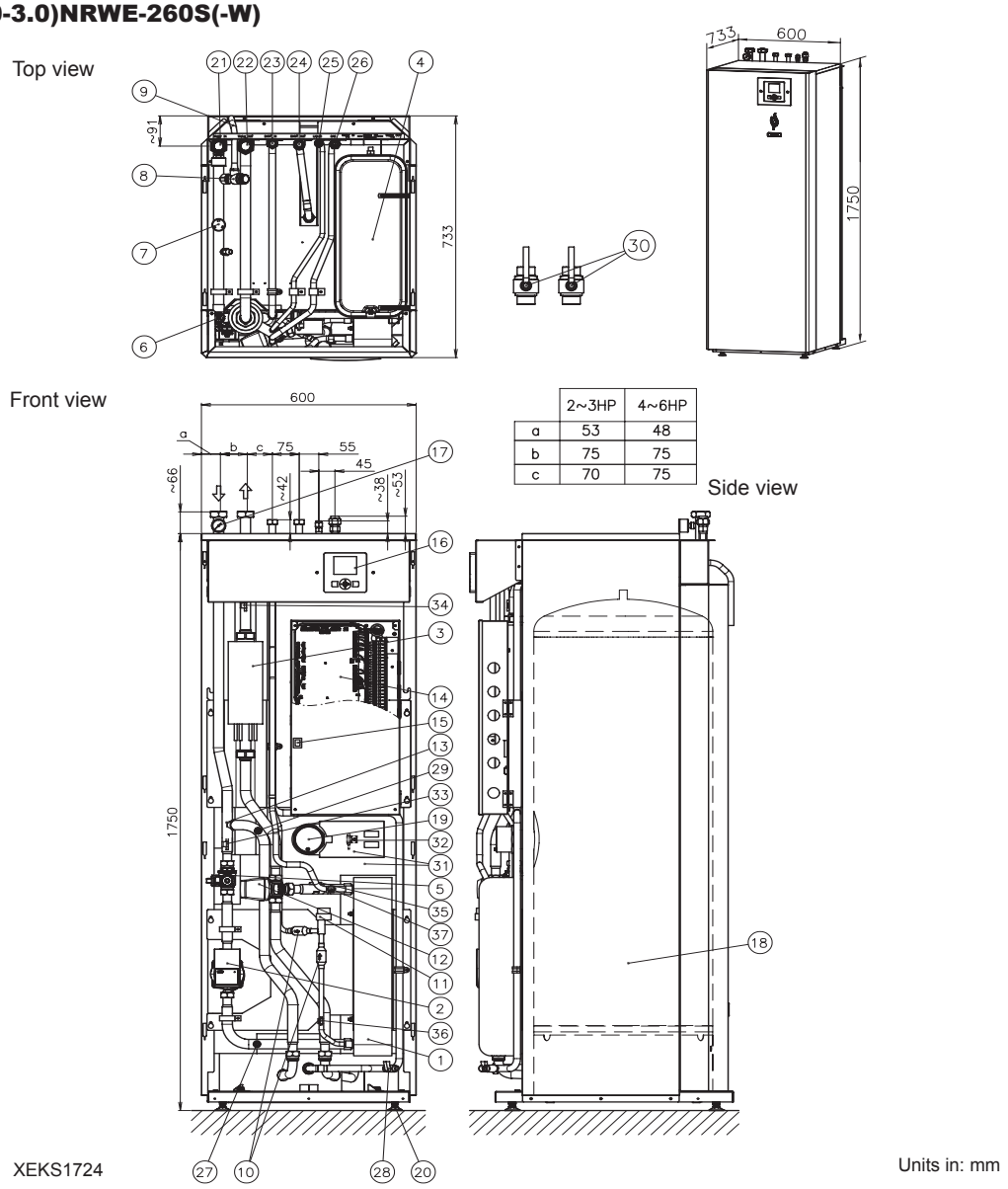

	2~3HP	4~6HP
a	53	48
b	75	75
c	70	75

Units in: mm

Nº	Part name	Nº	Part name
1	Plate heat exchanger	20	Mounting foot (x4)
2	Water pump	21	Water inlet pipe connection 2.0-3.0HP: G 1” female
3	Electric water heater	22	Water outlet pipe connection 2.0-3.0HP: G 1” female
4	Expansion vessel 6L	23	DHW inlet pipe connection - G 3/4” female
5	Water strainer	24	DHW outlet pipe connection - G 3/4” female
6	Air purger	25	Refrigerant liquid pipe connection 2HP: Ø6.35 (1/4”)/2.5~3HP: Ø9.52 (3/8”)
7	Low water pressure switch		
8	Safety valve	26	Refrigerant gas pipe connection - Ø15.88 (5/8”)
9	Drain pipe for safety valve	27	Drain port (For indoor unit water) - G 3/8”
10	Refrigerant strainer	28	Drain port (For DHW) - G 3/8”
11	Expansion valve	29	Manual air purger
12	3-way valve (for space heating and DHW)	30	Shutdown valve (Factory supplied accessory)
13	T-branch (for space heating and DHW)	31	Tank insulation
14	Electrical box	32	DHW thermistor
15	Switch for DHW emergency operation	33	Water inlet thermistor
16	Unit controller (Except (-W) models)	34	Water outlet thermistor
17	Manometer	35	Water outlet PHEX thermistor
18	DHW tank (260L)	36	Refrigerant liquid pipe thermistor
19	DHW tank heater+thermostat	37	Refrigerant gas pipe thermistor

◆ Model for solar combination

RWD-(2.0-3.0)NRWSE-260S(-W)

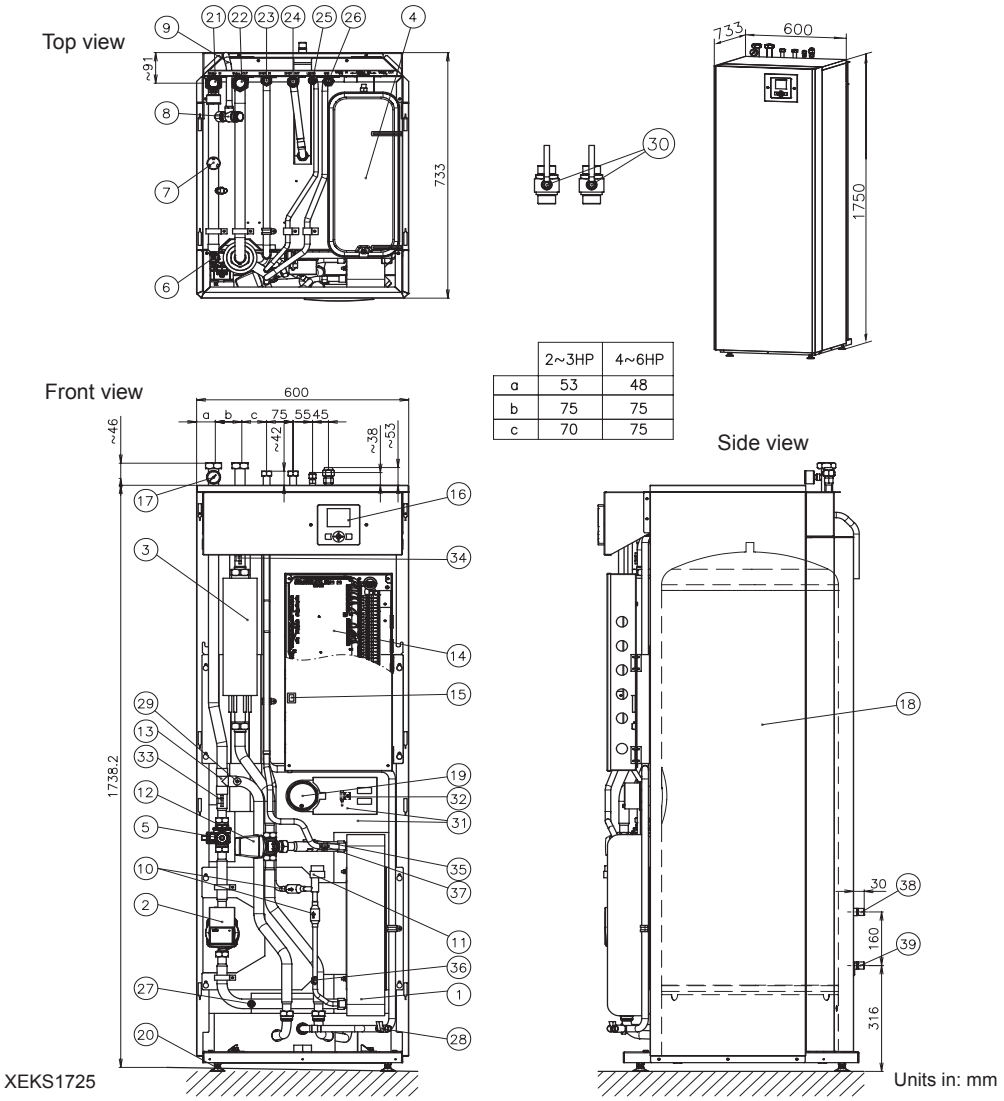

	2~3HP	4~6HP
a	53	48
b	75	75
c	70	75

Nº	Part name	Nº	Part name
1	Plate heat exchanger	21	Water inlet pipe connection 2.0-3.0HP: G 1” female
2	Water pump	22	Water outlet pipe connection 2.0-3.0HP: G 1” female
3	Electric water heater	23	DHW inlet pipe connection - G 1/4” female
4	Expansion vessel 6L	24	DHW outlet pipe connection - G 1/4” female
5	Water strainer	25	Refrigerant liquid pipe connection 2.0HP: Ø6.35(1/4”)-2.5~3.0HP: Ø9.52(1/4”)
6	Air purger	26	Refrigerant gas pipe connection Ø15.88 (5/8”)
7	Low water pressure switch	27	Drain port (for indoor unit water)- G3/8”
8	Safety valve	28	Drain port (for DHW)- G3/8”
9	Drain pipe for safety valve	29	Manual air purger
10	Refrigerant strainer (x2)	30	Shutdown valve (Factory supplied)
11	Expansion valve	31	Tank insulation
12	3-way valve (for space heating and DHW)	32	DHW thermistor
13	T-branch (for space heating and DHW)	33	Water inlet thermistor
14	Electrical box	34	Water outlet thermistor
15	Switch for DHW “emergency” operation	35	Water outlet PHEX thermistor
16	Unit controller (Except (-W) models)	36	Refrigerant liquid pipe thermistor
17	Manometer	37	Refrigerant gas pipe thermistor
18	DHW tank (260L)	38	Solar coil inlet connection
19	DHW tank heater + thermostat	39	Solar coil outlet connection
20	Mounting foot (x4)		

◆ Model for UK market

RWD-(2.0-3.0)NRWE-200S-K

Top view

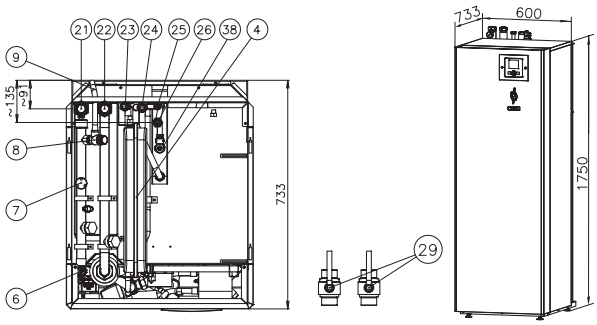

Front view

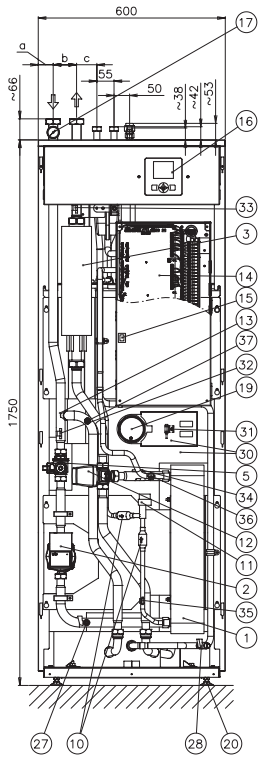

	2~3HP
a	53
b	75
c	60

Side view

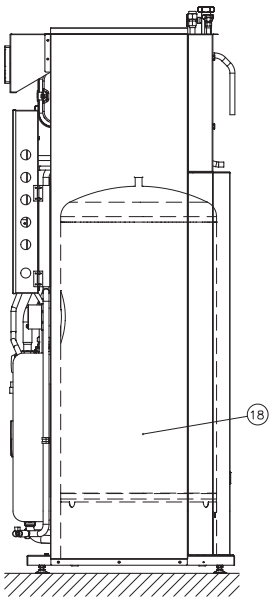

XEKS1755

Units in: mm

Nº	Part name	Nº	Part name
1	Plate heat exchanger	21	Water inlet pipe connection 2.0-3.0HP: G 1” female
2	Water pump	22	Water outlet pipe connection 2.0-3.0HP: G 1” female
3	Electric water heater	23	DHW inlet pipe connection - G 3/4” female
4	Expansion vessel 6L	24	DHW outlet pipe connection - G 3/4” female
5	Water strainer	25	Refrigerant liquid pipe connection 2.0HP: Ø6.35 (1/4”) / 2.5~3HP: Ø9.52 (3/8”)
6	Air purger		
7	Low water pressure switch	26	Refrigerant gas pipe connection - Ø15.88 (3/8”)
8	Safety valve	27	Drain port (For indoor unit water) - G 3/8”
9	Drain pipe for safety valve	28	Drain port (For DHW) - G 3/8”
10	Refrigerant strainer (x2)	29	Shutdown valve (Factory supplied accessory)
11	Expansion valve	30	Tank insulation
12	3-way valve (for space heating and DHW)	31	DHW thermistor
13	T-branch (for space heating and DHW)	32	Water inlet thermistor
14	Electrical box	33	Water outlet thermistor
15	Switch for DHW emergency operation	34	Water outlet PHEX thermistor
16	Unit controller	35	Refrigerant liquid pipe thermistor
17	Manometer	36	Refrigerant gas pipe thermistor
18	DHW tank (200L)	37	Manual air purger
19	DHW tank heater+thermostat	38	Pressure and Temperature relief valve
20	Mounting foot (x4)		

RWD-(2.0-3.0)NRWE-260S-K

Top view

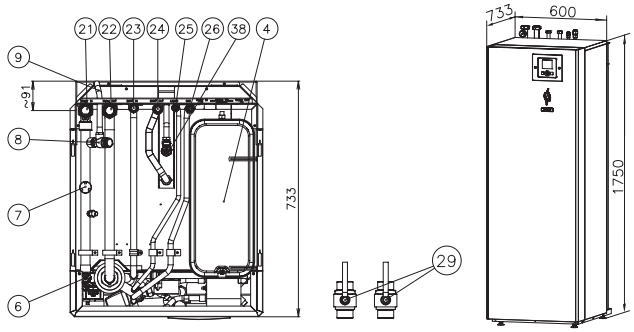

Front view

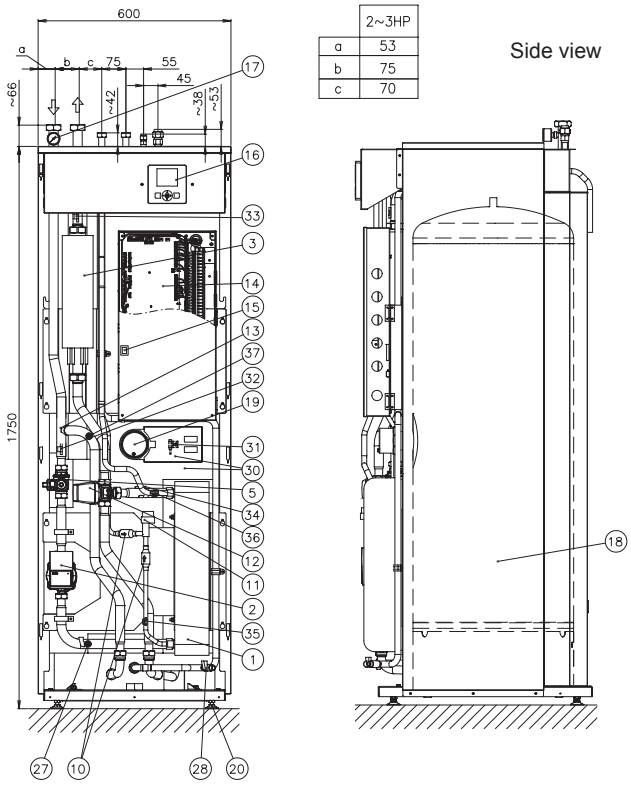

	2~3HP
a	53
b	75
c	70

Side view

XEKS1756

Units in: mm

Nº	Part name	Nº	Part name
1	Plate heat exchanger	21	Water inlet pipe connection 2.0-3.0HP: G 1” female
2	Water pump	22	Water outlet pipe connection 2.0-3.0HP: G 1” female
3	Electric water heater	23	DHW inlet pipe connection - G 3/4” female
4	Expansion vessel 6L	24	DHW outlet pipe connection - G 3/4” female
5	Water strainer	25	Refrigerant liquid pipe connection 2HP: Ø6.35 (1/4”)/2.5~3HP: Ø9.52 (3/8”)
6	Air purger		
7	Low water pressure switch	26	Refrigerant gas pipe connection - Ø15.88 (5/8”)
8	Safety valve	27	Drain port (For indoor unit water) - G 3/8”
9	Drain pipe for safety valve	28	Drain port (For DHW) - G 3/8”
10	Refrigerant strainer	29	Shutdown valve (Factory supplied accessory)
11	Expansion valve	30	Tank insulation
12	3-way valve (for space heating and DHW)	31	DHW thermistor
13	T-branch (for space heating and DHW)	32	Water inlet thermistor
14	Electrical box	33	Water outlet thermistor
15	Switch for DHW emergency operation	34	Water outlet PHEX thermistor
16	Unit controller (Except (-W) models)	35	Refrigerant liquid pipe thermistor
17	Manometer	36	Refrigerant gas pipe thermistor
18	DHW tank (260L)	37	Manual air purger
19	DHW tank heater+thermostat	38	Pressure and Temperature relief valve
20	Mounting foot (x4)		

6.1.3 Monobloc system - YUTAKI M

RASM-(2-3)VRE

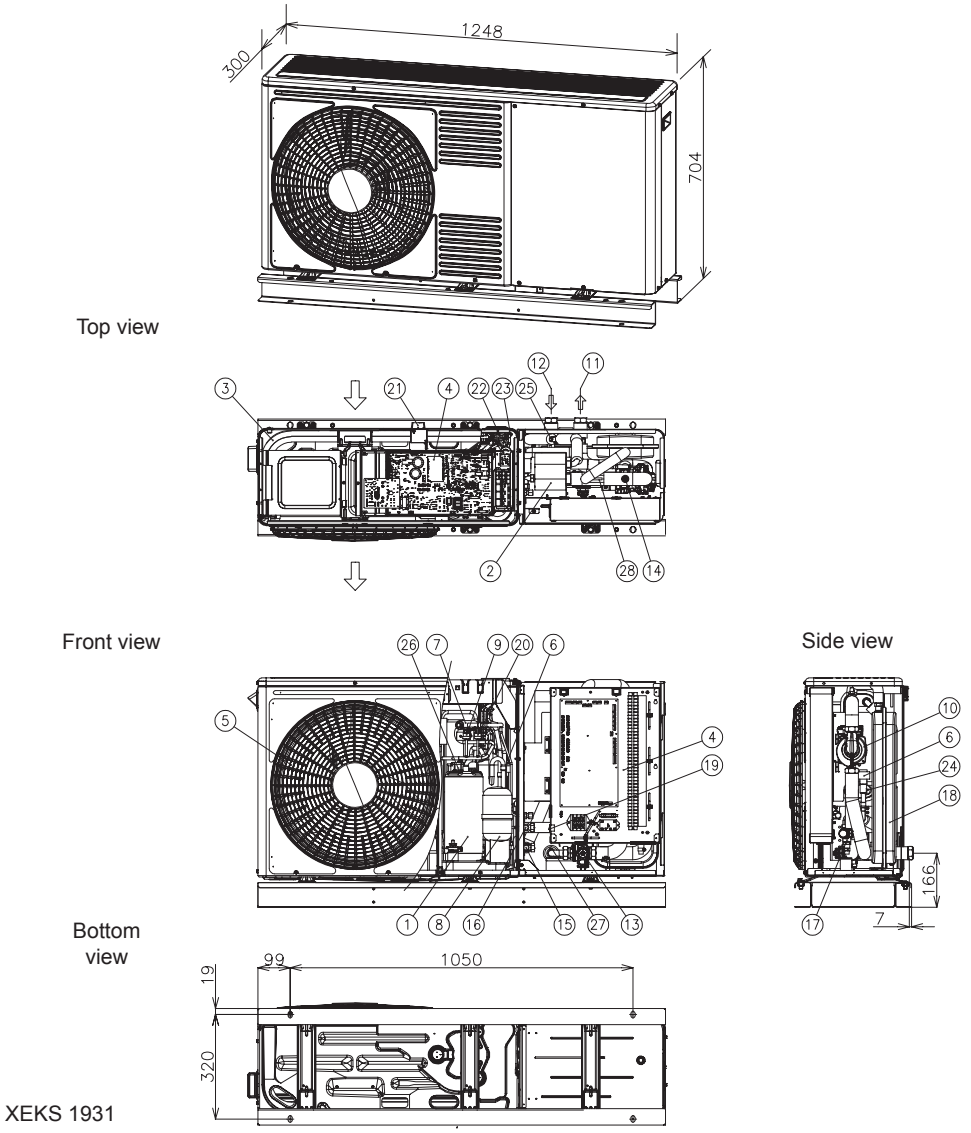

XEKS 1931

Units in mm.

Nº	Part name	Nº	Part name
1	Compressor	15	Stop valve for gas line - Ø15.88 (5/8”)
2	Water side heat exchanger	16	Stop valve for liquid line - 2HP:Ø6,35(1/4") - 3HP:Ø9.52 (3/8”)
3	Air side heat exchanger	17	Safety valve
4	Electrical box	18	Expansion vessel 6L
5	Fan (x1)	19	Switch for DHW “emergency” operation
6	Expansion valve (x2)	20	Pressure switch for control (Psc)
7	Reversing valve	21	Ambient thermistor
8	Accumulator	22	Liquid temperature thermistor
9	High pressure switch (HPS)	23	Liquid temperature thermistor
10	Water pump	24	Refrigerant liquid pipe thermistor
11	Water outlet - G 1”	25	Refrigerant gas pipe thermistor
12	Water inlet - G 1”	26	Compressor discharge thermistor
13	Water strainer	27	Water inlet thermistor
14	Air Purger	28	Water outlet thermistor

6.2 Service space

6.2.1 Split system - Outdoor unit

RAS-(2-3)WHVRP

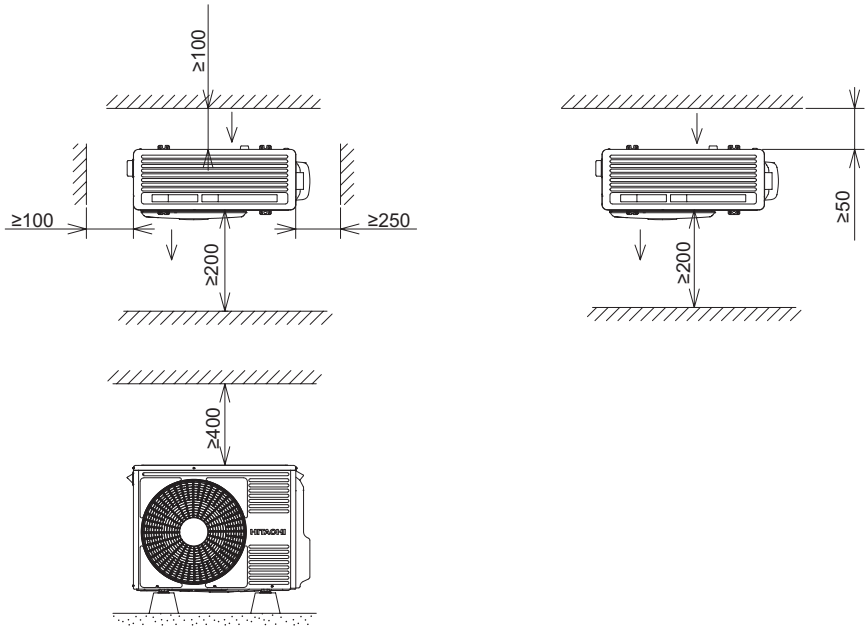

NOTE

Please refer to the Service Manual for detailed information.

6.2.2 Split system - Indoor unit

6.2.2.1 YUTAKI S

RWM-(2.0-3.0)NRE(-W)

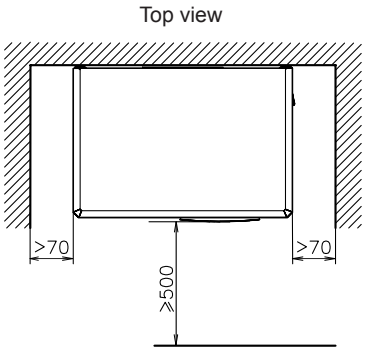

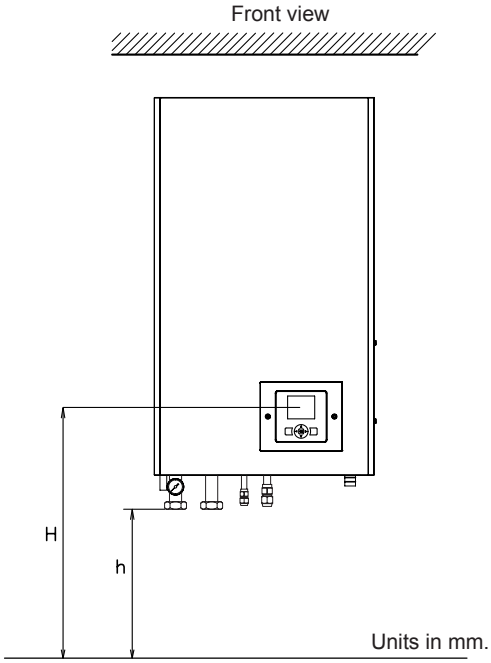

H: 1200~1500 mm

Recommended unit height for proper access to the control unit panel (Unit controller).

h: 350 mm

Minimum unit height for installing the shut-off valves and the first bending pipe line.

6.2.2.2 YUTAKI S COMBI

◆ **Standard model and UK market**

RWD-(2.0-3.0)NRWE-(200/260)S(-K)(-W)

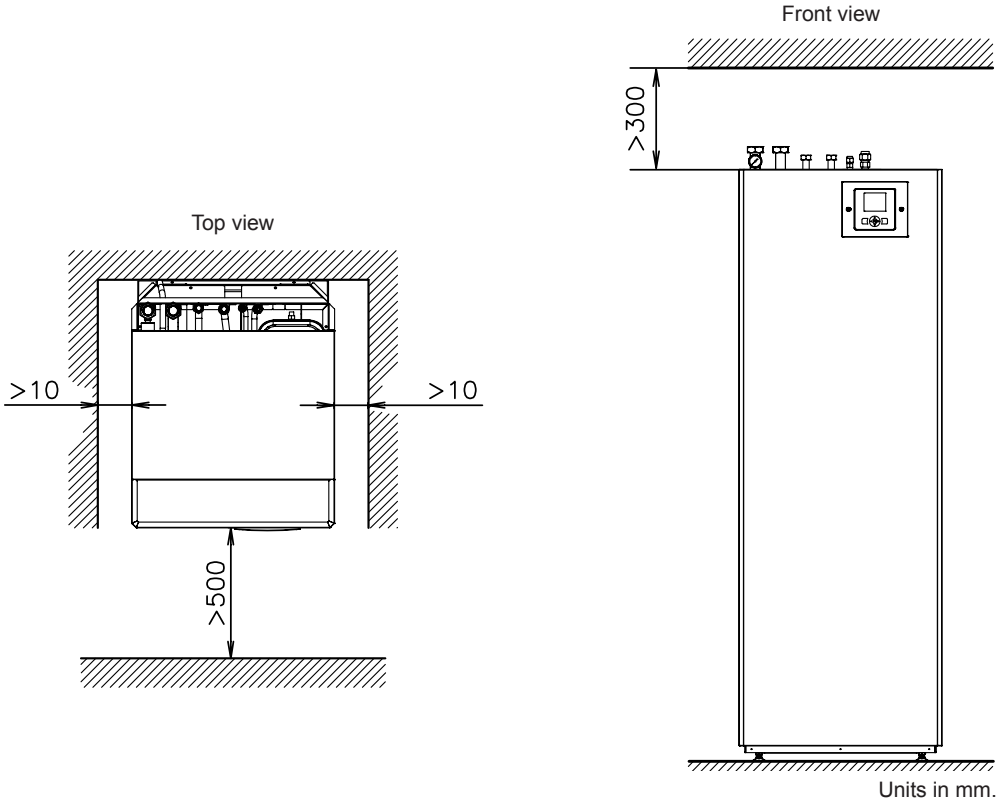

◆ **Model for solar combination**

RWD-(2.0-3.0)NRWSE-260S(-W)

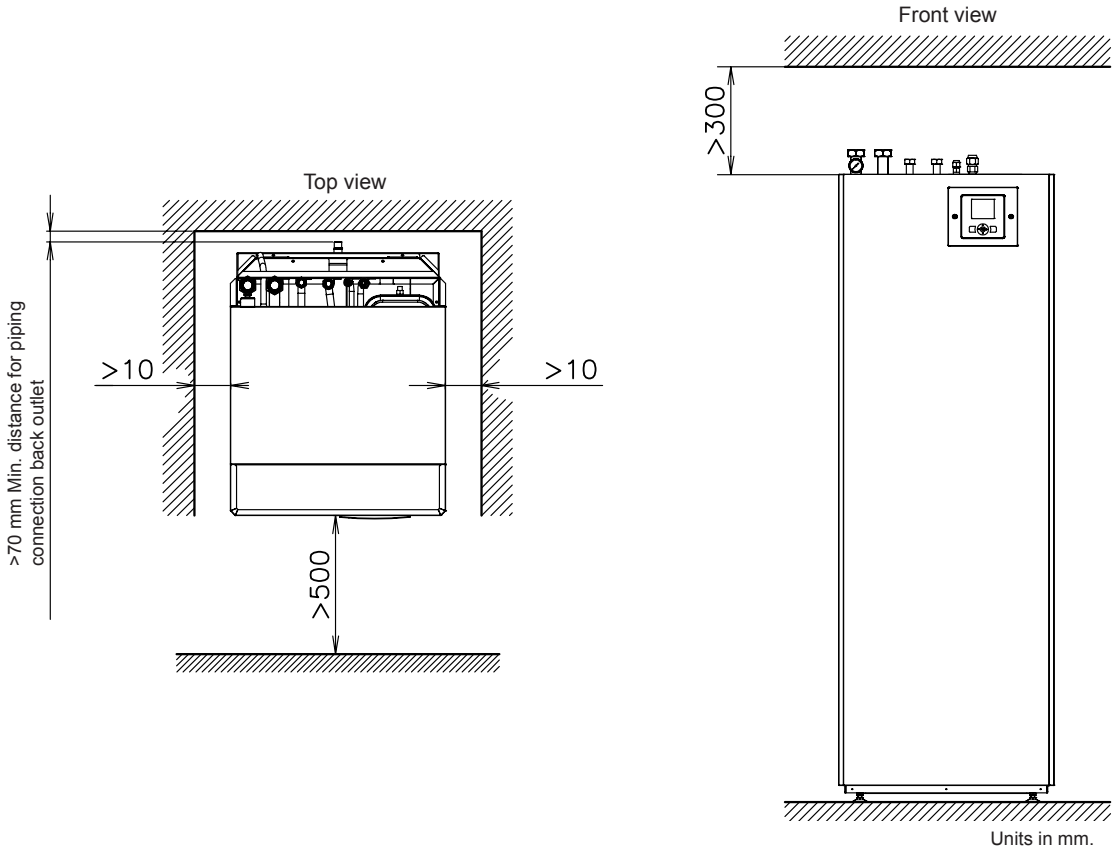

6.2.3 Monobloc system - YUTAKI M

RASM-(2-3)VRE

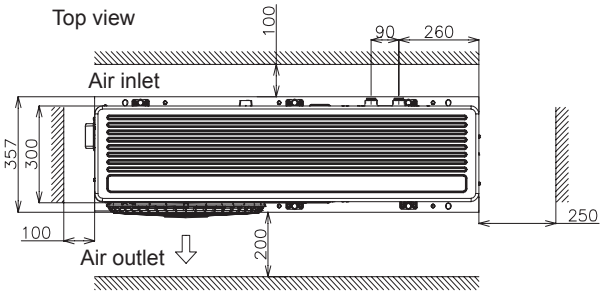

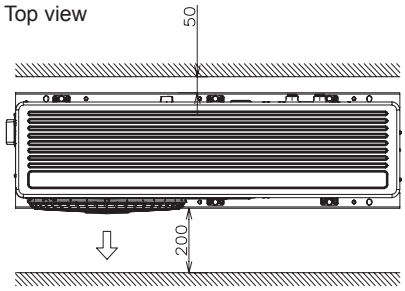

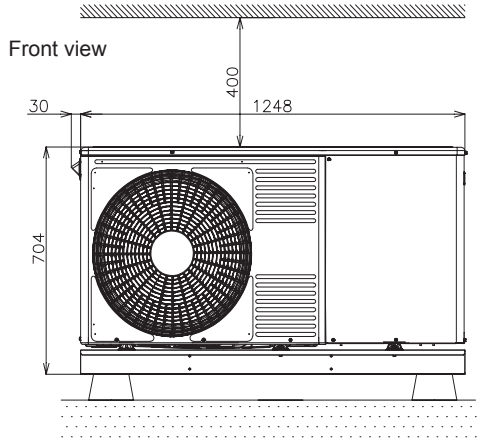

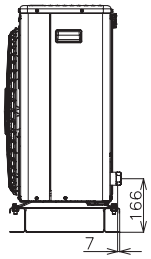

Units in mm.

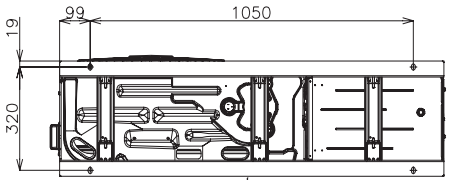

7. Refrigerant cycle and hydraulic circuit

Index

7.1 Refrigerant cycle and hydraulic circuit for Split system 92

7.1.1 YUTAKI S 92

7.1.2 YUTAKI S COMBI 93

7.2 Refrigerant cycle and hydraulic circuit for Monobloc system - YUTAKI M 94

7.1 Refrigerant cycle and hydraulic circuit for Split system

7.1.1 YUTAKI S

◆ **RAS-(2-3)WHVRP + RWM-(2.0-3.0)NRE(-W)**

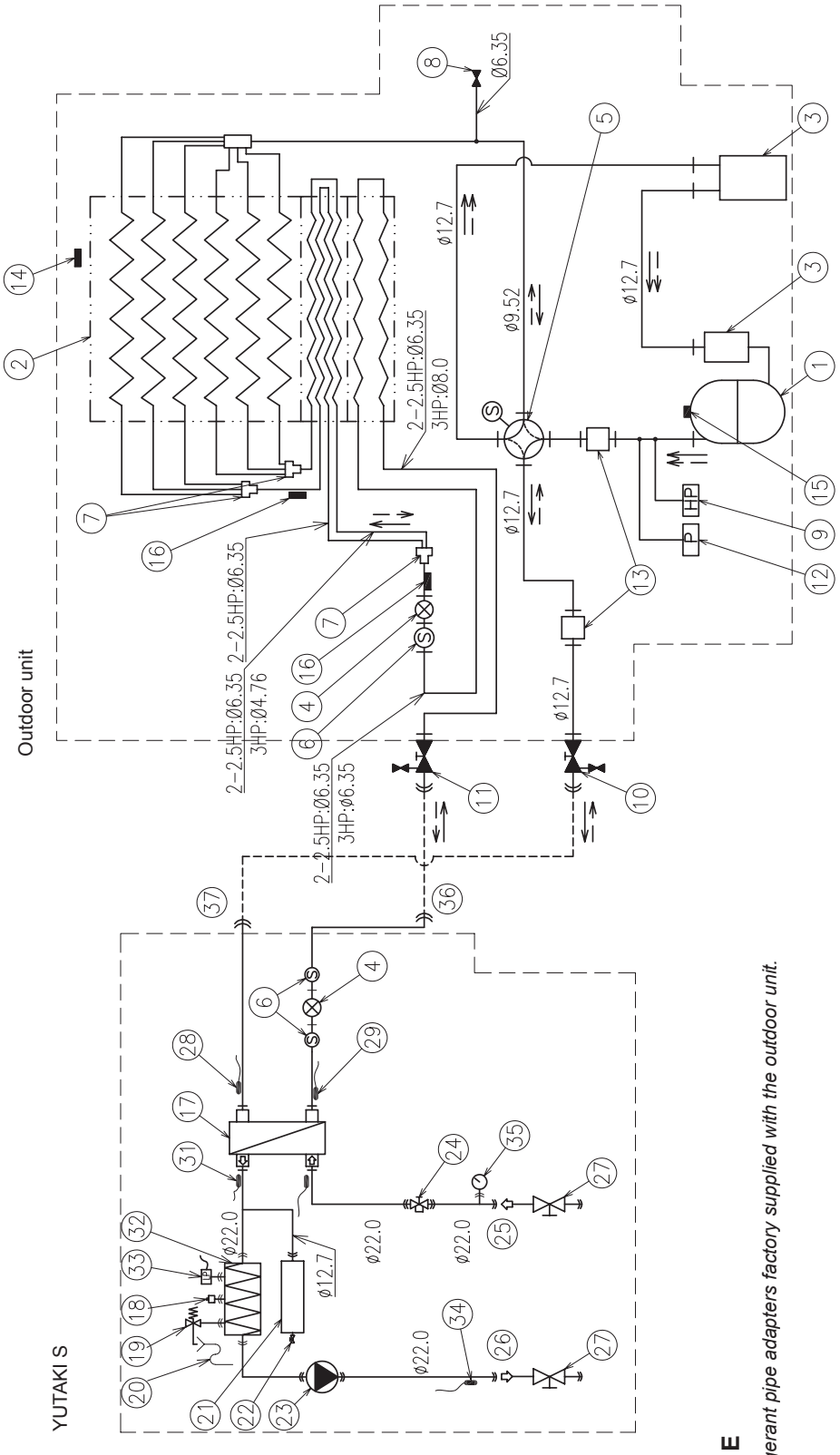

NOTE

(*): Use refrigerant pipe adapters factory supplied with the outdoor unit.

Nº	Part name
1	Compressor
2	Air side heat exchanger
3	Accumulator
4	OU electronic expansion valve
5	4-way valve
6	Refrigerant strainer
7	Distributor
8	Refrigerant check joint

Nº	Part name
9	High pressure switch for protection
10	Stop valve for gas line
11	Stop valve for liquid line
12	Pressure switch for control
13	Silencer (only for 3 HP)
14	Ambient thermistor
15	Discharge gas thermistor
16	Pipe thermistor

Nº	Part name
17	Water side heat exchanger
18	Air purger
19	Safety valve
20	Drain pipe
21	Expansion vessel
22	Air valve for pressure regulation of expansion vessel
23	Water pump

Nº	Part name
24	Water strainer
25	Water inlet connection
26	Water outlet connection
27	Shut-off valve
28	Gas pipe thermistor (heating)
29	Liquid pipe thermistor (heating)
30	Water inlet thermistor
31	Water outlet thermistor

Nº	Part name
32	Water electric heater
33	Low pressure switch
34	Water outlet thermistor
35	Manometer
36	IU refrigerant liquid connection
37	IU refrigerant gas connection

7.1.2 YUTAKI S COMBI

◆ **RAS-(2-3)WHVRP + RWD-(2.0-3.0)NRW(S)E-(200/260)S(-K)**

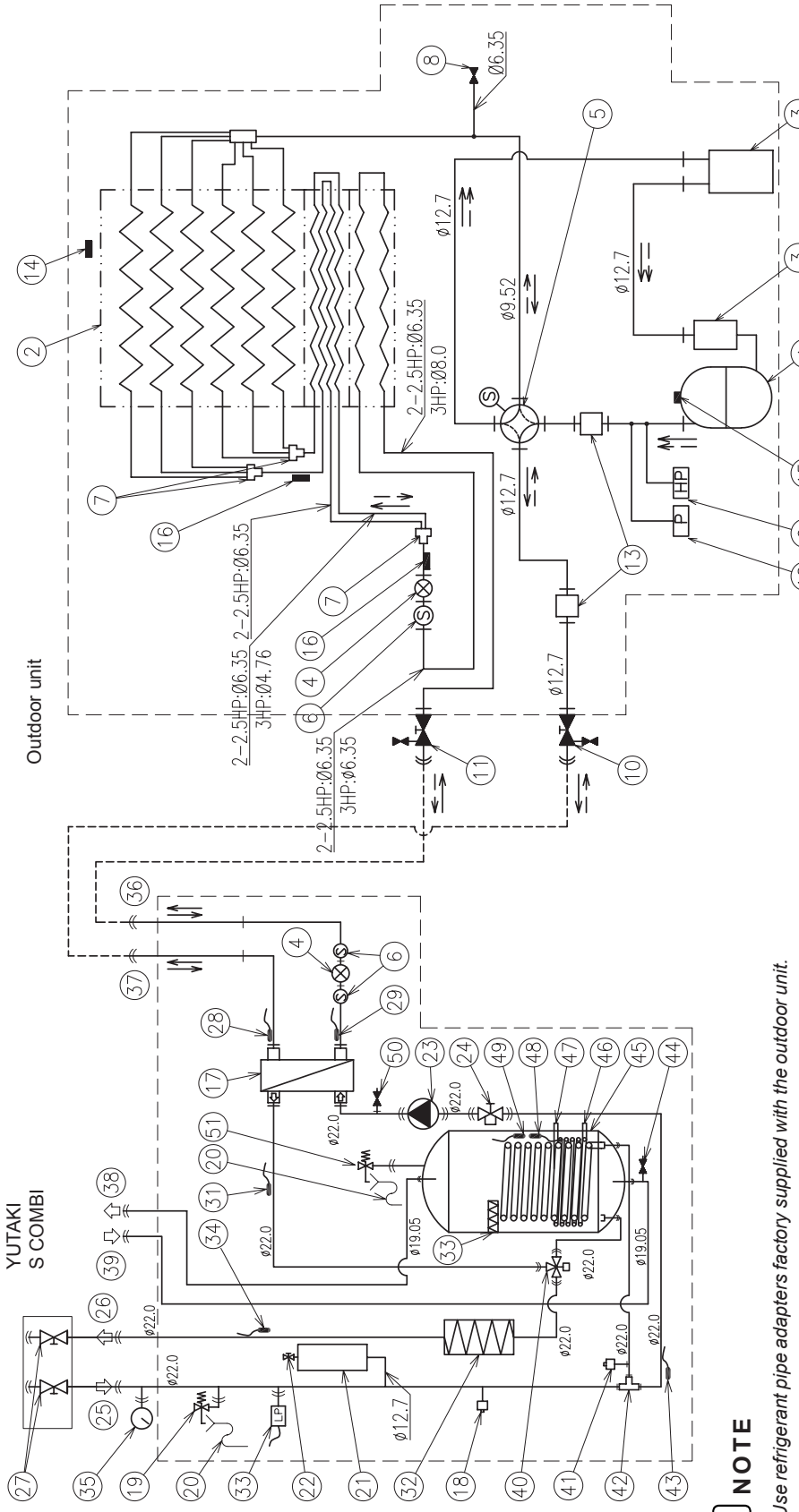

NOTE

(*): Use refrigerant pipe adapters factory supplied with the outdoor unit.

Heating refrigerant flow	Cooling refrigerant flow	Water flow (Heating/Cooling)	Field supplied piping line
Flare nut connection	Brazed connection	Refrigerant	R32

Nº	Part name
1	Compressor
2	Air side heat exchanger
3	Accumulator
4	Electronic expansion valve
5	4-way valve
6	Refrigerant strainer
7	Distributor
8	Refrigerant check joint
9	High pressure switch for protection

Nº	Part name
10	Stop valve for gas line
11	Stop valve for liquid line
12	Pressure switch for control
13	Silencer (only for 3HP)
14	Ambient thermistor
15	Discharge gas thermistor
16	Pipe thermistor
17	Water side heat exchanger
18	Air purger

Nº	Part name
19	Safety valve
20	Drain pipe
21	Expansion vessel
22	Air valve for pressure regulation of expansion vessel
23	Water pump
24	Water strainer
25	Water inlet connection
26	Water outlet connection

Nº	Part name
27	Shut-off valve
28	Gas pipe thermistor (Heating)
29	Water inlet thermistor
30	T-branch
31	Water outlet thermistor
32	Water electric heater
33	Low pressure switch
34	Water outlet thermistor
35	Manometer

Nº	Part name
36	IU refrigerant liquid connection
37	IU refrigerant gas connection
38	Water outlet (DHW)
39	Water inlet (DHW)
40	3-way valve
41	Manual air purger
42	T-branch
43	Water inlet thermistor
44	Drain port (for DHW)

Nº	Part name
45	Domestic hot water tank
46	Solar coil outlet (for solar model)
47	Solar coil inlet (for solar model)
48	DHW thermistor
49	DHW thermostat (for UK model)
50	Drain port (for IU water)
51	P & T relief valve (For UK market)
52	Electric heater and thermostat

7.2 Refrigerant cycle and hydraulic circuit for Monobloc system - YUTAKI M

◆ **RASM-(2-3)VRE**

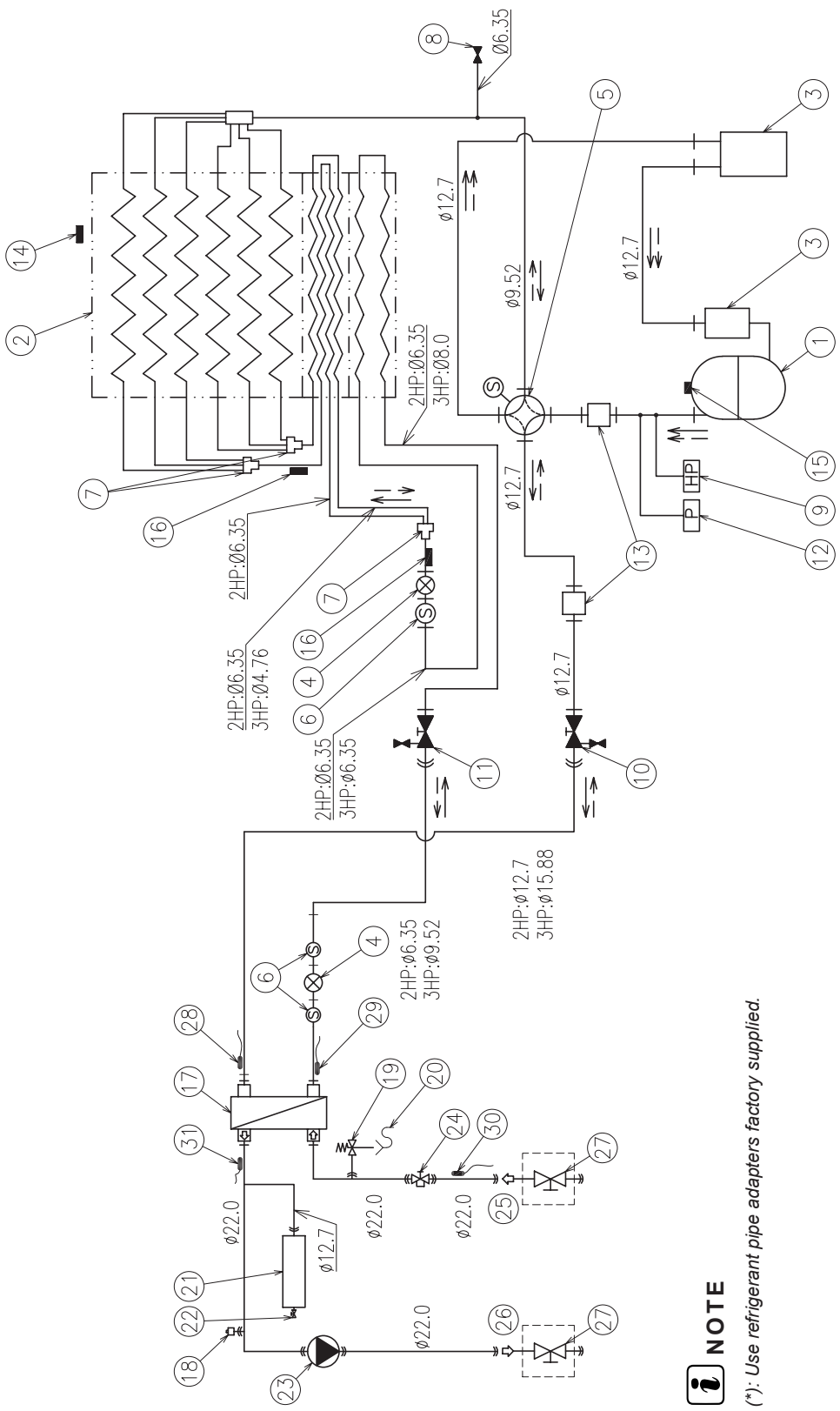

NOTE

(*): Use refrigerant pipe adapters factory supplied.

Nº	Part name
1	Compressor
2	Air side heat exchanger
3	Accumulator
4	Electronic expansion valve
5	4-way valve
6	Refrigerant strainer
7	Distributor

Nº	Part name
8	Refrigerant check joint
9	High pressure switch for protection
10	Stop valve for gas line
11	Stop valve for liquid line
12	Pressure switch for control
13	Silencer (only for 3 HP)

Nº	Part name
14	Ambient thermistor
15	Discharge gas thermistor
16	Pipe thermistor
17	Water side heat exchanger
18	Air purger
19	Safety valve
20	Drain pipe

Nº	Part name
21	Expansion vessel
22	Air valve for pressure regulation of expansion vessel
23	Water pump
24	Water strainer
25	Water inlet connection
26	Water outlet connection

Nº	Part name
27	Shut-off valve (Field supplied)
28	Gas pipe thermistor (Heating)
29	Liquide pipe thermistor (Heating)
30	Water inlet thermistor
31	Water outlet thermistor
34	Water outlet thermistor

8. Refrigerant and water piping

Index

8.1 General notes before performing piping work 96

8.1.1 Piping work 96

8.1.2 Suspension of refrigerant and water pipes 96

8.2 Refrigerant circuit 97

8.2.1 General notes R32 refrigerant 97

8.2.2 Refrigerant piping 97

8.2.3 Refrigerant charge 99

8.2.3.1 Refrigerant charge amount 99

8.2.3.2 Refrigerant charge before shipment (W_0 (kg)) 99

8.3 Space heating and DHW 99

8.3.1 Additional hydraulic necessary elements for space heating 99

8.3.2 Additional hydraulic necessary elements for DHW 100

8.3.3 Additional hydraulic optional elements (For DHW) 102

8.3.4 Additional hydraulic necessary elements for DHW (only for UK market) 102

8.3.5 Requirements and recommendations for the hydraulic circuit 103

8.3.6 Water piping 104

8.3.7 Water quality 105

8.1 General notes before performing piping work

8.1.1 Piping work

- Prepare locally-supplied copper pipes.
- Select the piping size with the correct thickness and correct material able to withstand sufficient pressure.
- Select clean copper pipes. Make sure that there is no dust or moisture inside the pipes. Blow the inside of the pipes with oxygen free nitrogen to remove any dust and foreign materials before connecting them.

NOTE

A system with no moisture or oil contamination will give maximum performance and lifecycle compared to that of a poorly prepared system. Take particular care to ensure that all copper piping is clean and dry internally.

- Cap the end of the pipe when pipe is to be inserted through a wall hole.
- Do not put pipes on the ground directly without a cap or vinyl tape at the end of the pipe.

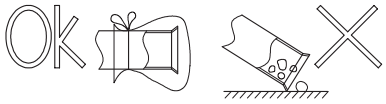

- If piping installation is not completed until next day or over a longer period of time, braze off the ends of the piping and charge with oxygen free nitrogen through a Schrader valve type access fitting to prevent moisture and particle contamination.
- It is advisable to insulate the water pipes, joints and connections in order to avoid heat loss and dew condensation on the surface of the pipes or accidental injures due to excessive heat on piping surfaces.
- Do not use insulation material that contains NH_3, as it can damage copper pipe material and become a source of future leakage.
- It is recommended to use flexible joints for the water piping inlet and outlet in order to avoid vibration transmission.
- Refrigerant circuit and Water circuit must be performed and inspected by a licensed technician and must comply with all relevant European and national regulations.
- Proper water pipe inspection should be performed after piping work to assure there is no water leakage in the space heating or DHW circuits.

8.1.2 Suspension of refrigerant and water pipes

- Suspend the refrigerant and water piping at certain points and prevent the refrigerant and water piping from being in direct contact with the building: walls, ceilings, etc.. If there is direct contact between pipes, abnormal sound may occur due to the vibration of the piping. Pay special attention in cases of short piping lengths.

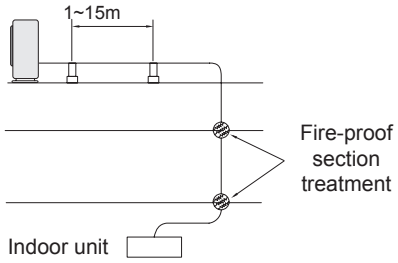

- Do not fix the refrigerant and water pipes directly with the metal fittings (refrigerant piping may expand and contract). Some examples for suspension method are shown below.

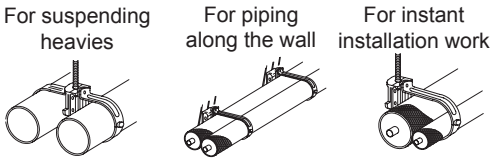

8.2 Refrigerant circuit

8.2.1 General notes R32 refrigerant

This appliance is filled with R32, an odourless flammable refrigerant gas with low burning velocity (A2L class pursuant to ISO 817). If the refrigerant is leaked, there is a possibility of ignition if it enters in contact with an external ignition source.

Make sure that unit installation and refrigerant piping installation comply with applicable legislation in each country. Also, in Europe, EN378 must be complied, as it is the applicable standard.

8.2.2 Refrigerant piping

◆ **Refrigerant piping length between indoor unit and outdoor unit (For YUTAKI (S/S COMBI))**

The unit installation and refrigerant piping should comply with the relevant local and national regulations for the designed refrigerant.

Due to R32 refrigerant and depending on final refrigerant charge amount, a minimum floor area for installation must be considered.

- If total refrigerant charge amount <1.84kg, there are no additional minimum floor area requirements.
- If total refrigerant charge amount ≥1.84kg, there are additional minimum floor area requirements to be checked.

New YUTAKI R32 range (2~3HP) due to low refrigerant charge amount and due to low additional charge needed, unit installation can achieve up to 30m (*27m for 3HP) without any minimum floor area requirement.

			2HP	2.5HP	3HP
Factory Charge		kg	1.20	1.30	1.30
Charge-less piping length		m	10	10	10
Additional Charge needed		g/m	15	15	30
Maximum piping		m	30	30	27
Maximum total refrigerant charge		kg	1.50	1.60	1.81
Minimum room area requirement (Amin)		m^2	No requirement is needed		
Minimum piping length between outdoor unit and indoor unit (Lmin)		m	3		
Maximum height difference between indoor and outdoor unit (H)					
	Outdoor unit higher than indoor unit	m	30 (2/2.5HP) 27 (3HP		
	Indoor unit higher than outdoor unit	m	20		

In case of increasing more than 30m (27m for 3HP) a minimum floor area requirement must be considered.

			2HP	2.5HP	3HP (*)
Factory Charge		kg	1.20	1.30	1.30
Charge-less piping length		m	10	10	10
Additional Charge needed		g/m	15	15	30
Maximum piping		m	50	50	40
Maximum total refrigerant charge		kg	1.80	1.90	2.20
Minimum room area requirement (Amin)		m^2	No requirement is needed	Minimum area is required	
Minimum piping length between outdoor unit and indoor unit (Lmin)		m	3		
Maximum height difference between indoor and outdoor unit (H)					
	Outdoor unit higher than indoor unit	m	30		
	Indoor unit higher than outdoor unit	m	20		

NOTE

(*) In case of 3HP with piping length >27m, refrigerant piping diameter and additional charge quantity must be considered.

◆ Minimum area requirements

In case of total refrigerant amount ≥1.84 kg, the unit should be installed, operated and stored in a room with a floor area larger than the minimum criteria. Use following graphic and table to determine these minimum criteria:

Refrigerant Amount (kg)	Minimum Area (m^2) (H:2.2m)
1.84	28.81
1.9	30.72
2.0	34.09
2.1	37.53
2.2	41.19
2.3	45.02
2.4	49.02
2.5	53.19
2.6	57.53
2.7	62.04
2.8	66.72
2.9	71.58

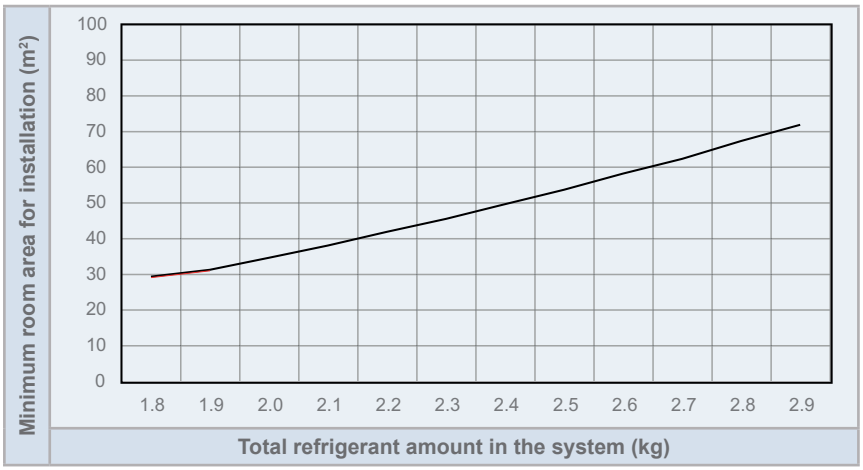

NOTE

In case of not achieving the minimum floor area, contact with your dealer.

◆ Refrigerant piping size

Piping connection size of outdoor unit & indoor unit

Model	Piping length	Outdoor unit		Refrigerant pipe		Indoor Unit	
		Pipe Connection size		(Between Outdoor unit and Indoor unit)		Pipe Connection size	
		Gas pipe	Liquid pipe	Gas pipe	Liquid pipe	Gas pipe	Liquid pipe
2HP	3~50m	Ø 12.7 (1/2”)	Ø 6.35 (1/4”)	Ø 12.7	Ø 6.35	Ø 15.88 (5/8”) (*)	Ø 6.35 (1/4”)
2.5HP	3~50m						Ø 9.52 (3/8”) (*)
3HP	3~27m	Ø 15.88 (5/8”) (*)	Ø 9.52 (3/8”) (*)	Ø 15.88	Ø 6.35	Ø 15.88 (5/8”)	Ø 9.52 (3/8”) (*)
	27~40m	Ø 15.88 (5/8”)	Ø 9.52 (3/8”)	Ø 15.88	Ø 9.52	Ø 15.88 (5/8”)	Ø 9.52 (3/8”) (*)

NOTE

(*): The refrigerant gas and liquid piping size for 2/2.5/3HP are different between outdoor and indoor unit, so refrigerant pipe adapters are required. These pipe adapters are factory supplied with the outdoor unit:

Model	Pipe adapter	
	Gas pipe	Liquid pipe
2 HP	Ø15.88→Ø12.7	-
2.5 HP	Ø15.88→Ø12.7	Ø9.52→Ø6.35
3.0 HP	-	Ø9.52→Ø6.35 (x2)

8.2.3 Refrigerant charge

8.2.3.1 Refrigerant charge amount

YUTAKI (S / S COMBI)

The R32 refrigerant is factory charged in the outdoor unit with a refrigerant charge amount for 10 m of piping length between outdoor and indoor unit.

YUTAKI M

YUTAKI M unit is a Monobloc system (closed refrigerant circuit) which has been factory charged, so additional refrigerant charge is not required.

8.2.3.2 Refrigerant charge before shipment (W_0 (kg))

YUTAKI (S / S COMBI)

Outdoor unit model	W_0 (kg)
RAS-2WHVRP	1.2
RAS-2.5WHVRP	1.3
RAS-3WHVRP	1.3

YUTAKI M

Model	W_0 (kg)
RASM-2VRE	1.2
RASM-3VRE	1.3

8.3 Space heating and DHW

DANGER

Do not connect the power supply to the indoor unit prior to filling the space heating and DHW circuits with water and checking water pressure and the total absence of any water leakage.

8.3.1 Additional hydraulic necessary elements for space heating

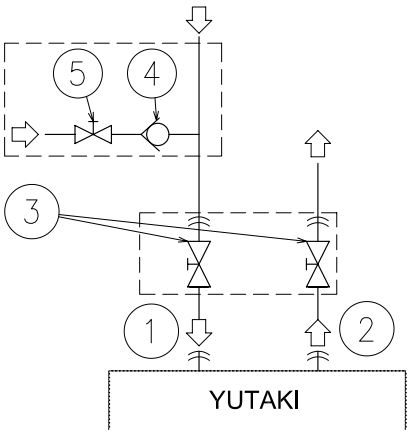

Type	Nº	Part name
Piping connections	1	Water inlet (Space heating)
	2	Water outlet (Space heating)
Factory supplied	3	Shut-off valve (factory-supplied) (Field-supplied for YUTAKI M series)
Accessories	4	Water check valve (ATW-WCV-01 accessory)
Field supplied	5	Shut-off valve

The following hydraulic elements are necessary to correctly perform the space heating water circuit:

- **Two shut-off valves (factory supplied accessory except for YUTAKI M series)** (3) must be installed in the indoor unit. One at the water inlet connection (1) and the other at the water outlet connection (2) in order to make easier any maintenance work.
- **A water check valve (ATW-WCV-01 accessory)** (5) with 1 shut-off valve (field supplied) (4) must be connected to the water filling point when filling the indoor unit. The check valve acts as a safety device to protect the installation against back pressure, back flow and back syphon of non-potable water into drinking water supply net.

8.3.2 Additional hydraulic necessary elements for DHW

The next hydraulic elements are necessary to correctly perform the domestic hot water circuit:

◆ **COMMON**

The following elements are required for all YUTAKI units.

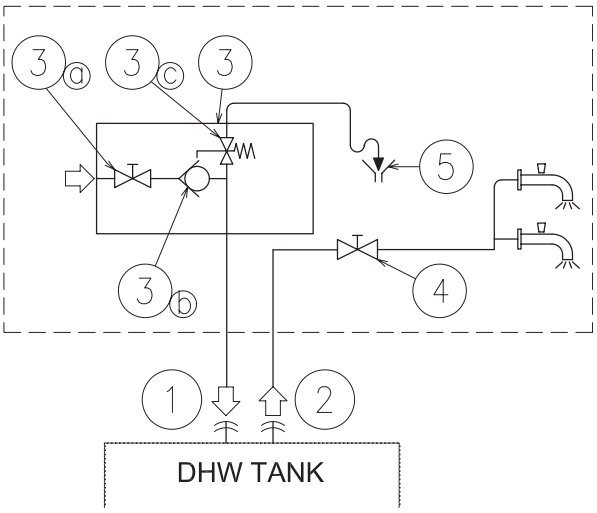

Type	Nº	Part name	
Piping connections	1	Water inlet (DHW)	
	2	Water outlet (DHW)	
Field supplied	3	Pressure and temperature relief valve	
		3a	Shut-off valve
		3b	Water check valve
		3c	Pressure relief valve
	4	Shut-off valve	
	5	Draining	

- **1 Shut-off valve (field supplied)**: one shut-off valve (4) must be connected after the DHW outlet connection of the DHW tank (2) in order to make easier any maintenance work.
- **A Security water valve (Field-supplied)**: this accessory (3) is a pressure and temperature relief valve that must be installed as near as possible to the DHW inlet connection of the DHW tank (1). It should ensure a correct draining (5) for the discharge valve of this valve. This security water valve should provide the following:
  - Pressure protection
  - Non-return function
  - Shut-off valve
  - Filling
  - Draining

NOTE

The discharge pipe should always be open to the atmosphere, free of frost and in continuous slope to the down side in case that water leakage exists.

◆ YUTAKI S / YUTAKI M

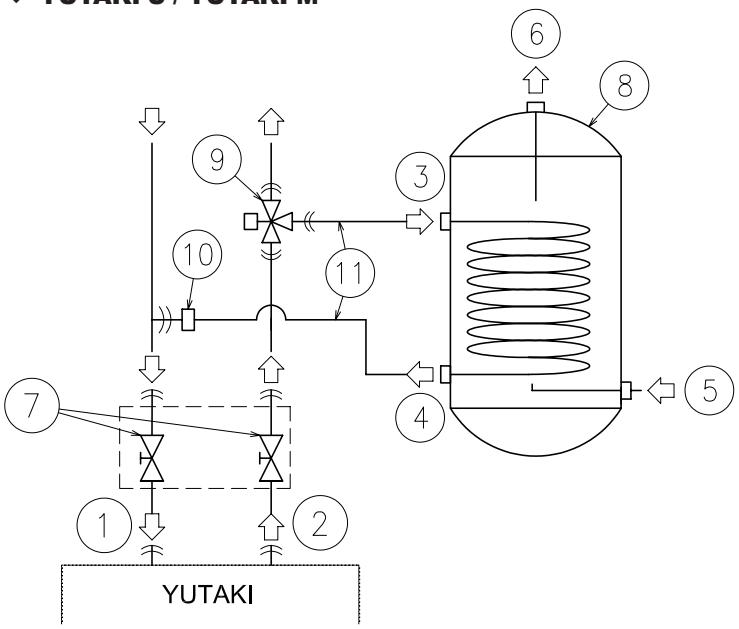

Type	Nº	Part name
Piping connections	1	Water inlet (Space heating)
	2	Water outlet (Space heating)
	3	Heating coil inlet
	4	Heating coil outlet
	5	Water inlet (DHW)
	6	Water outlet (DHW)
Factory supplied	7	Shut-off valve (factory-supplied) (Field-supplied for YUTAKI M series)
Accessories	8	Domestic hot water tank DHWT-(200/300)S-3.0H2E accessory
	9	3-way valve (ATW-3WV-01 accessory)
Field supplied	10	T-branch
	11	Heating coil pipes

YUTAKI S and YUTAKI M are not factory-supplied ready for DHW operation, but they can be used for the production of DHW if the following elements are installed:

- **A domestic hot water tank (DHWT-(200/260)S-3.0H2E accessory)** (8) has to be installed in combination with the indoor unit.
- **A 3-way valve (ATW-3WV-01 accessory)** (9) must be connected at one point of the water outlet pipe of the installation.
- **A T-branch (field supplied)** (10) must be connected at one point of the water inlet pipe of the installation.
- **Two water pipes (field supplied)** (11). One pipe between 3-way valve and the heating coil inlet (3) of the DHW tank, the other one between the T-branch and the heating coil outlet (4) of the DHW tank.

◆ YUTAKI S COMBI

YUTAKI S COMBI is factory-supplied ready for DHW operation (Fitted with DHW tank and 3-way valve). Only the "Common" elements are required.

8.3.3 Additional hydraulic optional elements (For DHW)

In case of a recirculation circuit for the DHW circuit:

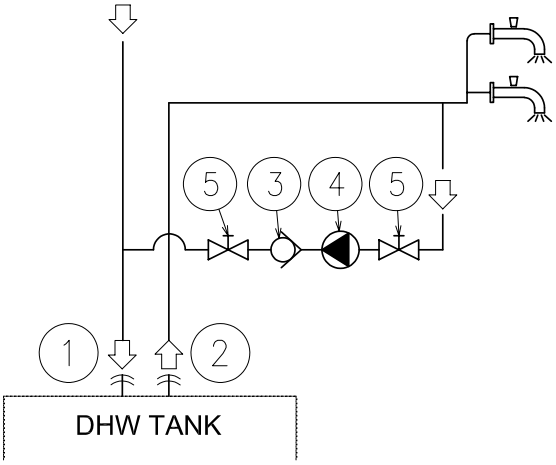

Type	Nº	Part name
Piping connections	1	Water inlet (DHW)
	2	Water outlet (DHW)
Accessories	3	Water check valve (ATW-WCV-01 accessory)
Field supplied	4	Water pump
	5	Shut-off valve

- 1 Recirculation water pump (field supplied): this water pump (3) will help to correctly recirculate the hot water to the DHW inlet.
- 1 Water check valve (ATW-WCV-01 accessory): this HITACHI accessory (4) is connected after the recirculation water pump (31) in order to ensure the non-return of water.
- 2 Shut-off valves (field supplied) (5): one before the recirculation water pump (3) and other after the water check valve accessory (4).

8.3.4 Additional hydraulic necessary elements for DHW (only for UK market)

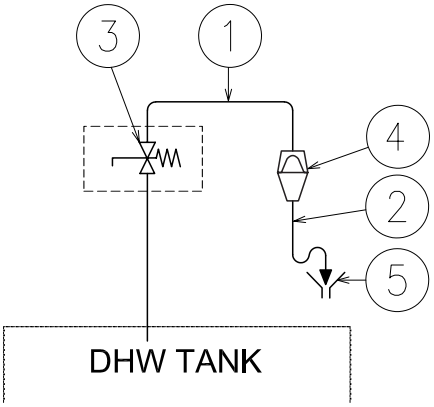

Type	Nº	Part name
Piping connections	1	T&P relief valve outlet pipe Ø15 (factory supplied)
	2	Tundish outlet pipe (Field supplied)
Accessories	3	Pressure and Temperature relief valve (Factory supplied)
Field supplied	4	Tundish (Field supplied)
	5	Drain (Field supplied)

The following accessories are necessary for the compliance of the YUTAKI S COMBI for UK market with the UK requirements referred in the UK Building Regulations 2000.

- 1 temperature and pressure relief valve (factory supplied), fitted at the hottest part of the DHW tank. This device protects the unit of excessive temperature (>96º C) and excessive pressure (>7 bar) in the DHW tank. Additionally, a Ø15 diameter pipe (factory supplied)is fitted to the outlet of the relief valve and drives the discharge to the tundish (4).
- 1 tundish(4)(field supplied), installed in a vertical position, with no more than 600 mm of pipe between the valve outlet and the tundish.
- 1 Tundish outlet pipe (2)(field supplied) with a vetical section at least 300 mm long below the tundish(4), before any elbows or bends in the pipework. This pipe should be made of metal or other material that has been demonstrated to be capable of safety withstanding temperatures and pressure of the water discharged, as it is refferred in the UK Building Regulations.
- The discharge pipe from the tundish (2) must terminate in a safe place where is no risk to persons in the vicinity of the discharge. the discharge will consist of high water temperature and pressure.

8.3.5 Requirements and recommendations for the hydraulic circuit

- The maximum piping length depends on the maximum pressure availability in the water outlet pipe. Please check the pump curves.
- The indoor unit is equipped with an air purger (factory supplied) at the highest location of the Indoor Unit. If this location is not the highest of the water installation, air might be trapped inside the water pipes, which could cause system malfunction. In that case additional air purgers (field supplied) should be installed to ensure no air enters the water circuit.
- For heating floor system, the air should be purged by means of an external pump and an open circuit to avoid air bags.
- When the unit is stopped during shut-off periods and the ambient temperature is very low, the water inside the pipes and the circulating pump may freeze, thus damaging the pipes and the water pump. In these cases, the installer shall ensure that the water temperature inside the pipes does not fall below the freezing point. In order to prevent this, the unit has a self-protection mechanism which should be activated (refer to the Service manual, "Optional functions" chapter).
- Check that the water pump of the space heating circuit works within the pump operating range and that the water flow is over the pump's minimum. If the water flow is below 6 litres/minute for 2.0/2.5/3.0HP unit, alarm is displayed on the unit.
- An additional special water filter is highly recommended to be installed on the space heating (field installation), in order to remove possible particles remaining from brazing which cannot be removed by the indoor unit water strainer.
- When selecting a DHW tank, take into consideration that the storage capacity of the tank has to meet with the daily consumption in order to avoid stagnation of water.
- Fresh water must circulate inside the DHW tank water circuit at least one time per day during the first days after the installation has been performed. Additionally, flush the system with fresh water when there is no consumption of DHW during long periods of time.
- Try to avoid long runs of water piping between the tank and the DHW installation in order to decrease possible temperature losses.
- If the domestic cold water entry pressure is higher than the equipment's design pressure (6 bar), a pressure reducer must be fitted with a nominal value of 7 bar.
- Ensure that the installation complies with applicable legislation in terms of piping connection and materials, hygienic measures, testing and the possible required use of some specific components like thermostatic mixing valves, Differential pressure overflow valve, etc.
- The maximum water pressure is 3 bar (nominal opening pressure of the safety valve). Provide adequate reduction pressure device in the water circuit to ensure that the maximum pressure is NOT exceeded.
- Ensure that the drain pipes connected to the safety valve and to the air purger are properly driven to avoid water being in contact with unit components.
- Make sure that all field supplied components installed in the piping circuit can withstand the water pressure and the water temperature range in which the unit can operate.
- YUTAKI units are conceived for exclusive use in a closed water circuit.
- The internal air pressure of the expansion vessel tank will be adapted to the water volume of the final installation (factory supplied with 0.1 MPa of internal air pressure).
- Do not add any type of glycol to the water circuit in YUTAKI S / S COMBI units. The use of glycol is only allowed for YUTAKI M units in order to prevent water pipes from freezing. If using glycol for the water circuit of YUTAKI M units, refer to the specific information throughout the document.
- Drain taps must be provided at all low points of the installation to permit complete drainage of the circuit during servicing.

8.3.6 Water piping

◆ Water piping length

Consider the following guidelines when designing the water circuit.

Item	YUTAKI S	YUTAKI S COMBI
Maximum water piping length between indoor unit and DHW tank	10 m	--
Maximum water piping length between indoor unit and 3-way valve	3 m	--
Maximum water piping length between 3-way valve and DHW tank	10 m	--

Item	YUTAKI M
Maximum water piping length between outdoor unit and domestic hot water tank	10 m
Maximum water piping length between outdoor unit and domestic hot water tank 3-way valve	10 m
Maximum total piping combination	10 m

NOTE

DHW Piping length. It is recommended to avoid long runs of piping between the domestic hot water tank and hot water outlet side in order to avoid heat losses.

◆ Water piping size

YUTAKI S

(inches)

Model	Space heating pipes connection		
	Inlet connection	Outlet connection	Shut-off valves
(2.0-3.0)HP	G 1” (female)	G 1” (female)	G 1” (male) - G 1” (male)

YUTAKI S COMBI

(inches)

Model	Space heating connection			DHW connection			Solar connection (*)	
	Inlet connection	Outlet connection	Shut-off valves	Inlet connection	Outlet connection	P & T relief valve (**)	Inlet connection	Outlet connection
(2.0-3.0)HP	G 1” (female)	G 1” (female)	G 1” (male) - G 1” (male)	G 3/4” (female)	G 3/4” (female)	Ø15 mm	G 1/2” (female)	G 1/2” (female)

(*): Only for models for solar combination.

(**): Only for models for UK market.

YUTAKI M

(inches)

Model	Space heating pipes connection		
	Inlet connection	Outlet connection	Shut-off valves (Field-supplied)
2.0HP	G 1” (female)	G 1” (female)	G 1” (male) - G 1” (male)
3.0HP	G 1” (female)	G 1” (female)	G 1” (male) - G 1” (male)

8.3.7 Water quality

CAUTION

- *Water quality must be according to EU council directive 98/83 EC.*
- *Water should be subjected to filtration or to a softening treatment with chemicals before application as treated water.*
- *It is also necessary to analyse the quality of water by checking pH, electrical conductivity, ammonia ion content, sulphur content, and others. Should the results of the analysis be not good, the use of industrial water would be recommended.*
- *No antifreeze agent shall be added to the water circuit.*
- *To avoid deposits of scale on the heat exchangers surface it is mandatory to ensure a high water quality with low levels of $CaCO_3$.*

◆ Recommendations for the DHW circuit

The following is the recommended standard water quality.

Item	DHW space	Tendency (1)	
	Water supplied (3)	Corrosion	Deposits of scales
Electrical Conductivity (mS/m) (25°C) {µS/cm} (25 °C) (2)	100~2000	●	●
Chlorine Ion (mg Cl^-/l)	max. 250	●	
Sulphate (mg/l)	max. 250	●	
Combination of chloride and sulphate (mg/l)	max. 300	●	●
Total Hardness (mg $CaCO_3$ /l)	60~150		●

NOTE

- *(1): The mark "●" in the table means the factor concerned with the tendency of corrosion or deposits of scales.*
- *(2): The value shown in "{}" are for reference only according to the former unit.*
- *(3): Water range will be according s/UNE 112076:2004 IN.*

HITACHI

9. Electrical and control settings

Index

9.1 General check 108

9.2 System wiring diagram 110

9.3 Electrical connection 111

9.3.1 Wiring size 111

9.3.2 Minimum requirements of the protection devices 112

9.4 Transmission wiring 113

9.4.1 YUTAKI units 113

9.5 Optional indoor unit wiring (accessories) 114

9.6 Setting of DIP switches and RSW switches 117

9.6.1 Outdoor unit RAS-(2/2.5/3)WHVRP and RASM-(2-3)VRE 117

9.6.1.1 Location of DIP switches and rotary switches 117

9.6.1.2 Function of DIP switches and rotary switches 117

9.6.1.3 LED indication 119

9.6.2 YUTAKI unit 119

9.6.2.1 Location of DIP switches and rotary switches 119

9.6.2.2 Function of DIP switches and rotary switches 119

9.6.2.3 LED indication 122

9.1 General check

- Make sure that the following conditions related to power supply installation are satisfied:
  - The power capacity of the electrical installation is large enough to support the power demand of the YUTAKI system (outdoor unit + indoor unit + DHW tank (if apply)).
  - The power supply voltage is within ±10% of the rated voltage.
  - The impedance of the power supply line is low enough to avoid any voltage drop of more than 15% of the rated voltage.
- Following the Council Directive 2004/108/EC, relating to electromagnetic compatibility, the table below indicates the Maximum permitted system impedance Z_{max} at the interface point of the user's supply, in accordance with EN61000-3-11.

◆ Split system - Outdoor unit

Model	Power supply	Z_{max} (Ω)
RAS-2WHVRP	1~ 230V 50Hz	-
RAS-2.5WHVRP		-
RAS-3WHVRP		0.43

◆ Split system - Indoor unit

YUTAKI S

Model	Power supply	Operation mode	Z_{max} (Ω)
RWM-(2.0-3.0)NRE(-W)	1~ 230V 50Hz	Without electric heaters	-
		With electric heater	-
		With DHW tank heater	-
		With electric and DHW tank heaters	0.26

NOTE

- *The data corresponding to DHW tank heater is calculated in combination with the domestic hot water tank accessory "DHWT-(200/300)S-3.0H2E".*
- *In case of three phases connection, Z_{max} is not considered.*

YUTAKI S COMBI

Model	Power supply	Operation mode	Z_{max} (Ω)
RWD-(2.0-3.0) NRW(S)E-(200/260)S(-K)(-W)	1~ 230V 50Hz	Without electric heaters	-
		With electric heater	-
		With DHW tank heater	-
		With electric and DHW tank heaters	0.28

◆ Monobloc system - YUTAKI M

Model	Power supply	Operation mode	Z_{max} (Ω)
RASM-2VRE	1~ 230V 50Hz	-	-
		With DHW tank heater	0.30
RASM-3VRE		-	0.43
		With DHW tank heater	0.24

NOTE

The data corresponding to DHW tank heater is calculated in combination with the domestic hot water tank accessory "DHWT-(200/300)S-3.0H2E".

- The status of Harmonics for each model, regarding compliance with IEC 61000-3-2 and IEC 61000-3-12, is as follows:

Status regarding compliance with IEC 61000-3-2 and IEC 61000-3-12	Models			
	Split system			Monobloc system
	Outdoor unit	Indoor unit		YUTAKI M
		YUTAKI S	YUTAKI S COMBI	
Equipment complying with IEC 61000-3-2 (*): Professional use	RAS-2WHVRP(*) RAS-2.5WHVRP(*) RAS-3WHVRP (*)	RWM-2.0NRE(-W) RWM-2.5NRE(-W) RWM-3.0NRE(-W)	-	RASM-2VRE (*) RASM-3VRE(*)
Equipment complying with IEC 61000-3-12	-	-	RWD-2.0NRWE-200S(-W) RWD-2.0NRW(S)E-260S(-W) RWD-2.5NRWE-200S(-W) RWD-2.5NRW(S)E-260S(-W) RWD-3.0NRWE-200S(-W) RWD-3.0NRW(S)E-260S(-W)	-
Installation restrictions may be applied by supply authorities in relation to harmonics	-	-	-	-

- Check to ensure that existing installation (mains power switches, circuit breakers, wires, connectors and wire terminals) already complies with the national and local regulations.
- The use of the DHW tank heater is disabled as factory setting. If it is desired to enable the DHW tank heater operation during normal indoor unit operation, adjust the DSW4 pin 3 of the PCB1 to the ON position and use the adequate protections. Refer to the section *"9.3 Electrical connection"* for the detailed information.

9.2 System wiring diagram

Connect the units according to the following electric diagram:

TB	:	Terminal board	——	:	Field wiring
CB	:	Circuit breaker	❁	:	Field-supplied
ELB	:	Earth leakage breaker	1,2	:	Outdoor-Indoor communication
– – –	:	Internal wiring			

YUTAKI (S / S COMBI)

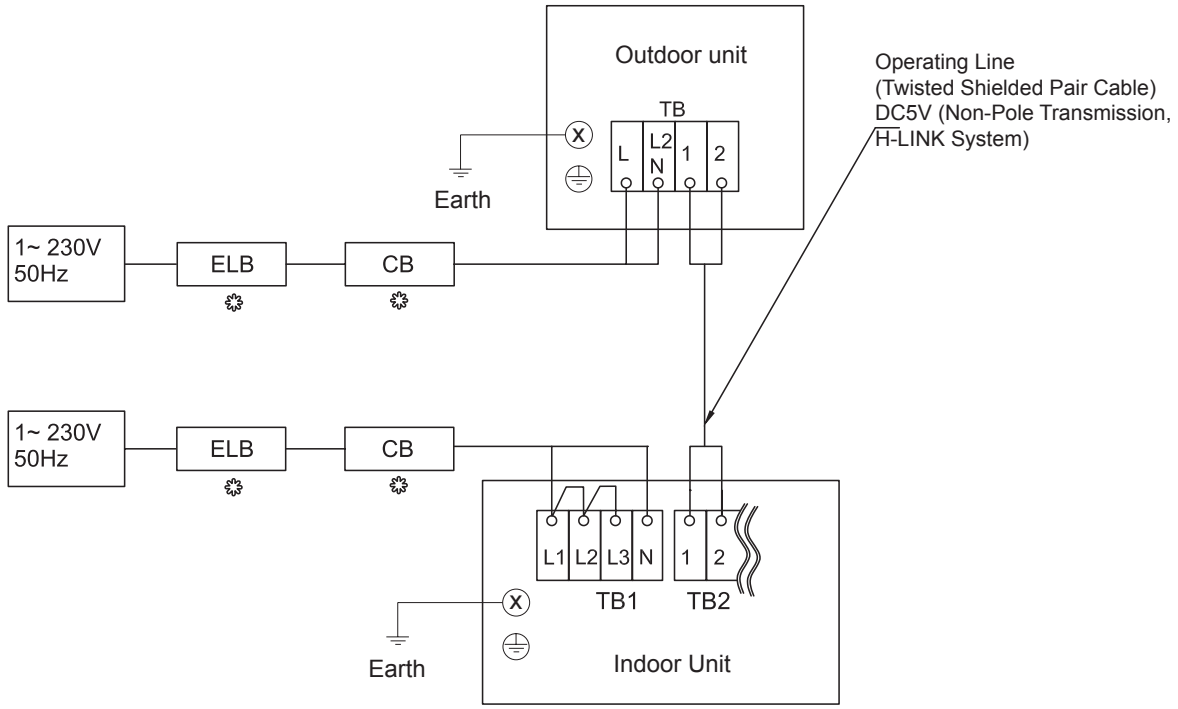

YUTAKI M

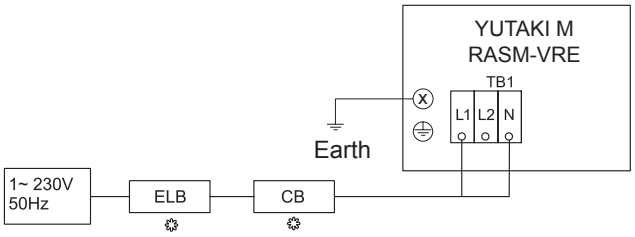

9.3 Electrical connection

CAUTION

- *Check to ensure that the field supplied electrical components (mains power switches, circuit breakers, wires, connectors and wire terminals) have been properly selected according to the electrical data indicated on this chapter and they comply with national and local codes. If it is necessary, contact with your local authority in regards to standards, rules, regulations, etc.*
- *Use a dedicated power circuit for the indoor unit. Do not use a power circuit shared with the outdoor unit or any other appliance.*

9.3.1 Wiring size

Use wires which are not lighter than the polychloroprene sheathed flexible cord (code designation 60245 IEC 57).

◆ **Split system - Outdoor unit**

Model	Power supply	Max. current (A)	Power supply cables	Transmitting cables	Actuator cables
			EN60335-1	EN60335-1	EN60335-1
RAS-2WHVRP	1~ 230V 50Hz	10.4	2 x 2.5 mm² + GND	2 x 0.75 mm² (*Shielded cable)	2 x 0.75 mm² + GND
RAS-2.5WHVRP		12.9	2 x 2.5 mm² + GND		
RAS-3WHVRP		15.8	2 x 4.0 mm² + GND		

◆ **Split system - Indoor unit**

YUTAKI S

Model	Power supply	Operation mode	Max. current (A)	Power supply cables	Transmitting cables	Actuator cables
				EN60335-1	EN60335-1	EN60335-1
RWM-(2.0-3.0) NRE(-W)	1~ 230V 50Hz	Without electric heaters	0.2	2 x 0.75 mm² + GND	2 x 0.75 mm²	2 x 0.75mm² + GND
		With electric heater	14.6	2 x 2.5 mm² + GND		
		With DHW tank heater	14.6	2 x 2.5 mm² + GND		
		With electric and DHW tank heaters	28.9	2 x 6.0 mm² + GND		

NOTE

The data corresponding to DHW tank heater is calculated in combination with the domestic hot water tank accessory "DHWT-(200/300) S-3.0H2E".

YUTAKI S COMBI

Model	Power supply	Operation mode	Max. current (A)	Power supply cables	Transmitting cables	Actuator cables
				EN60335-1	EN60335-1	EN60335-1
RWD-(2.0-3.0) NRW(S) E-(200/260)S(-K) (-W)	1~230V 50Hz	Without electric heaters	0.2	2 x 0.75 mm² + GND	2 x 0.75 mm²	2 x 0.75 mm² + GND
		With electric heater	14.6	2 x 2.5 mm² + GND		
		With DHW tank heater	12.7	2 x 2.5 mm² + GND		
		With electric and DHW tank heaters	27.1	2 x 6.0 mm² + GND		

◆ **Monobloc system - YUTAKI M**

Model	Power supply	Operation mode	Max. current (A)	Power supply cables	Transmitting cables	Actuator cables
				EN60335-1	EN60335-1	EN60335-1
RASM-2VRE	1~ 230V 50Hz	Without DHW tank heater	10.6	2 x 2.5 mm² + GND	2 x 0.75 mm²	2 x 0.75 mm² + GND
		With DHW tank heater	23.1	2 x 6.0 ²mm² + GND		
RASM-3VRE		Without DHW tank heater	16.0	2 x 4.0 mm² + GND		
		With DHW tank heater	28.5	2 x 6.0 mm² + GND		

NOTE

The data corresponding to DHW tank heater is calculated in combination with the domestic hot water tank accessory "DHWT-(200/300)S-3.0H2E".

9.3.2 Minimum requirements of the protection devices

CAUTION

- *Ensure specifically that there is an Earth Leakage Breaker (ELB) installed for the units (outdoor and indoor unit).*
- *If the installation is already equipped with an Earth Leakage Breaker (ELB), ensure that its rated current is large enough to hold the current of the units (outdoor and indoor unit).*

NOTE

- *Electric fuses can be used instead of magnetic Circuit Breakers (CB). In that case, select fuses with similar rated values as the CB.*
- *The Earth Leakage Breaker (ELB) mentioned on this manual is also commonly known as Residual Current Device (RCD) or Residual Current Circuit Breaker (RCCB).*
- *The Circuit Breakers (CB) are also known as Thermal-Magnetic Circuit Breakers or just Magnetic Circuit Breakers (MCB).*

◆ Split system - Outdoor unit

Model	Power supply	Applicable voltage		MC (A)	CB (A)	ELB (nº of poles/A/mA)
		U max. (V)	U min. (V)			
RAS-2WHVRP	1~ 230V 50Hz	253	207	10.4	16	2/40/30
RAS-2.5WHVRP				12.9	16	
RAS-3WHVRP				15.8	20	

MC: Maximum current; CB: Circuit breaker; ELB: Earth leakage breaker

◆ Split system - Indoor unit

YUTAKI S

Model	Power supply	Applicable voltage		Operation mode	MC (A)	CB (A)	ELB (nº of poles/A/mA)
		U max. (V)	U min. (V)				
RWM-(2.0-3.0) NRE(-W)	1~ 230V 50Hz	253	207	Without electric heaters	0.2	5	2/40/30
				With electric heater	14.6	16	
				With DHW tank heater	14.6	16	
				With electric and DHW tank heaters	28.9	32	

NOTE

The data corresponding to DHW tank heater is calculated in combination with the domestic hot water tank accessory "DHWT-(200/300)S-3.0H2E".

YUTAKI S COMBI

Model	Power supply	Applicable voltage		Operation mode	MC (A)	CB (A)	ELB (nº of poles/A/mA)
		U max. (V)	U min. (V)				
RWD-(2.0-3.0) NRW(S)E-(200/260) S(-K)(-W)	1~ 230V 50Hz	253	207	Without electric heaters	0.2	5	2/40/30
				With electric heater	14.6	16	
				With DHW tank heater	12.7	16	
				With electric and DHW tank heaters	27.1	32	

◆ Monobloc system - YUTAKI M

Model	Power supply	Applicable voltage		Operation mode	MC (A)	CB (A)	ELB (nº of poles/A/mA)
		U max. (V)	U min. (V)				
RASM-2VRE	1~ 230V 50Hz	253	207	Without DHW tank heater	10.6	16	2/40/30
				With DHW tank heater	23.1	32	
RASM-3VRE				Without DHW tank heater	16.0	20	
				With DHW tank heater	28.5	32	2/40/30

NOTE

The data corresponding to DHW tank heater is calculated in combination with the domestic hot water tank accessory "DHWT-(200/300)S-3.0H2E".

9.4 Transmission wiring

9.4.1 YUTAKI units

- This is the transmission wiring between outdoor and indoor unit, ATW-RTU(*) communication and Central devices.
- The transmission is wired to terminals 1-2.
- The H-LINK II wiring system requires only two transmission cables that connect the indoor unit and the outdoor unit in case of split system and also connect the indoor unit with ATW-RTU(*) or central devices like ATW-TAG-02, ATW-KNX-02 and ATW-MBS-02.

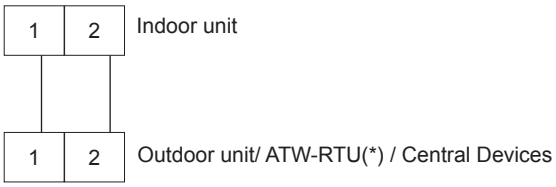

NOTE

(*) Except ATW-RTU-04 (wired to terminals 13-14).

- Use twist pair wires (0.75 mm²) for operation wiring between outdoor unit and indoor unit. The wiring must consist of 2-core wires (Do not use wire with more than 3 cores).
- Use shielded wires for intermediate wiring to protect the units from noise interference, with a length of less than 300m and a size in compliance with local codes.
- In the event that a conduit tube for field-wiring is not used, fix rubber bushes to the panel with adhesive.

CAUTION

Ensure that the transmission wiring is not wrongly connected to any live part that could be damaged the PCB.

NOTE

This section applies only to split systems (Outdoor unit + Indoor unit). It does not apply to YUTAKI M.

9.5 Optional indoor unit wiring (accessories)

◆ Summary of the terminal board connections for YUTAKI units

YUTAKI M

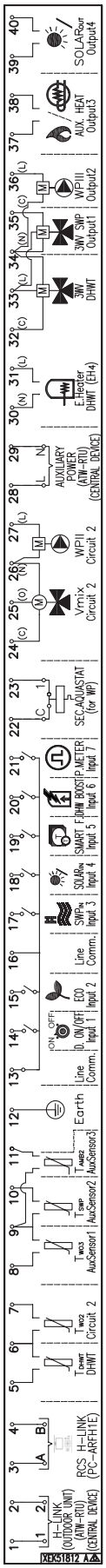

YUTAKI S / S COMBI

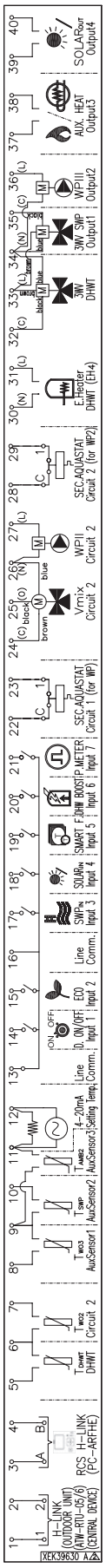

Mark	Part name		Description
TERMINAL BOARD 1 (TB1)			
N	1~ 230V 50Hz	3N~ 400V 50Hz	Main power supply connection
L1			
L2	-		
L3			
TERMINAL BOARD 2 (TB2)			
1	H-LINK commutation		The H-LINK transmission has to be done between the indoor unit and the terminals 1-2 of either outdoor unit, ATW-RTU (except ATW-RTU-04) or any other central device.
2			
3	H-LINK communication for remote control switch		Terminals for the connection of the YUTAKI unit controller.
4			
5	DHW tank's thermistor		The DHW sensor is used to control the temperature of the domestic hot water tank.
6	Common thermistor		Common terminal for thermistor.
7	Thermistor for water outlet temperature of second cycle		The sensor is used for the second temperature control and should be positioned after the mixing valve and the circulation pump.
8	Thermistor for water outlet temperature after hydraulic separator		Water sensor for hydraulic separator, buffer tank or boiler combination.
9	Common thermistor		Common terminal for thermistors.
10	Thermistor for swimming pool water temperature		The sensor is used for the swimming pool temperature control and should be positioned inside plate heat exchanger of the swimming pool.
11	Thermistor for second ambient temperature		The sensor is used for the second ambient temperature control and it should be positioned outdoors.
	YUTAKI M (R410A) / YUTAKI S / YUTAKI S COMBI: 4-20 mA application (Not used)		
12	YUTAKI M (R32): Earth		Earth connection for the 3 way valve and water pump NEW
	YUTAKI M (R410A) / YUTAKI S / YUTAKI S COMBI: 4-20 mA application (Not used)		
13	Common line		Terminal Line common for input 1 and input 2.
14	Input 1 (Demand ON/OFF) (*)		The air to water heat pump system has been designed to allow the connection of a remote thermostat (HITACHI offers the room thermostat ATW-RTU-04 as accessory) to effectively control your home's temperature. Depending on the room temperature, the thermostat will turn the air to water heat pump system ON and OFF.
15	Input 2 (ECO mode) (*)		Available signal which allows to reduce the water setting temperature of circuit 1, circuit 2 or both.
16	Common line		Terminal Line common for inputs 3, 4, 5, 6, 7.
17	Input 3 (Swimming pool) (*)		Only for swimming pool installations: It is necessary to connect an external input to the air to water heat pump to provide signal when the water pump of swimming pool is ON.
18	Input 4 (Solar) (*)		Available input for Solar combination with Domestic Hot Water Tank.
19	Input 5 (Smart function) (*)		For the connection of an external tariff switch device to switch OFF the heat pump during peak electricity demand period. Depending on the setting, the heat pump or DHWT will be blocked when signal is open/closed.
20	Input 6 (DHW boost) (*)		Available input for an instantaneous heating of the domestic hot water of the tank.
21	Input 7 (Power meter)		The measuring of the real power consumption can be done connecting an external power meter. The number of pulses of the power meter is a variable which must be set. By this, every pulse input is added into corresponding operation mode (Heating, Cooling, DHW Operation). Two possible options: - One power meter for all installation (IU+OU). - Two separated power meters (one for IU and one for OU).
22	Aquastat security for circuit 1 (WP1)		Terminals intended for the connection of the Aquastat security accessory (ATW-AQT-01) for controlling water temperature of the circuit 1.
23			
24(C)	Mixing valve close		When a mixing system is required for a second temperature control, these outputs are necessary to control the mixing valve.
25(O)	Mixing valve open		
26(N)	N Common		
27(L)	Water Pump 2 (WP2)		When there is a second temperature application, a secondary pump is the circulating pump for the secondary heating circuit.

Mark	Part name	Description
28	YUTAKI M: Auxiliary power YUTAKI S / S COMBI: Aquastat security for circuit 2 (WP2)	YUTAKI M: Power supply for ATW-RTU and central device NEW YUTAKI S / S COMBI: Terminals intended for the connection of the Aquastat security accessory (ATW-AQT-01) for controlling water temperature of the circuit 2.
29		
30(N)	Electrical Heater DHW Output	If DHW tank contains an electric heater, the air to water heat pump can activate it if the heat pump cannot achieve the required DHW temperature by itself.
31(L)		
32(C)	Common line	Common terminal for the 3-way valve for DHW tank.
33(L)	3-way valve for DHW tank	The air to water heat pump can be used to heat DHW. This output will be on when DHW is activated.
34(N)	N common	Neutral terminal common for 3-way valve of DHW tank and outputs 1 and 2.
35(L)	Output 1 (3-way valve for swimming pool) (*)	The air to water heat pump can be use to heat swimming pool. This output will be ON when swimming pool is activated.
36(L)	Output 2 (Water pump 3 (WP3)) (*)	When there is a hydraulic separator or buffer tank, additional water pump (WP3) is needed.
37	Output 3 (Auxiliary boiler or electric heater) (*)	The boiler can be used to alternate with the heat pump when the heat pump cannot achieve the required temperature by itself. A water electric heater (as accessory) can be used to provide the additional heating required on the coldest days of the year.
38		
39	Output 4 (Solar) (*)	Output for solar combination with Domestic Hot Water Tank.
40		

NOTE

(*): Inputs and outputs explained in the table are the factory-set options. By means of the unit controller, some other inputs and outputs functions can be configured and used. Please, refer to the Service Manual for detailed information.

9.6 Setting of DIP switches and RSW switches

9.6.1 Outdoor unit RAS-(2/2.5/3)WHVRP and RASM-(2-3)VRE

9.6.1.1 Location of DIP switches and rotary switches

The PCB in the outdoor unit is operating with DIP switches and push switches. The location is as follows:

PCB1

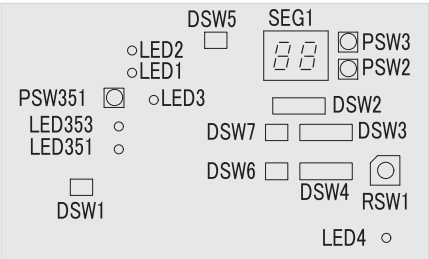

PCB2

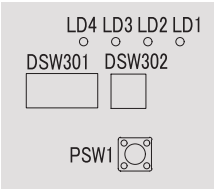

9.6.1.2 Function of DIP switches and rotary switches

NOTE

- *The mark "■" indicates the position of dips switches.*
- *No mark "■" indicates pin position is not affecting.*
- *The figures show the settings before shipment or after selection.*

DANGER

Before setting dips switches, first turn the power source off and then set the position of the dips switches. In case of setting the switches without turning the power source off, the contents of the setting are invalid.

◆ **DSW1: No setting is required**

When set pin number 1 to ON, the electric current detection is cancelled. Pin number 1 should be set back to OFF after electrical work	

◆ **DSW301: Test run mode**

Setting before shipment	
Test run for pump down	
Test run for heating	
Forced stoppage of compressor	

◆ **DSW2: Optional Function setting**

Factory setting	
Optional function setting mode (The optional function selection mode becomes available)	
External output setting mode (The output signals selection mode becomes available).	

◆ DSW3: Capacity Setting (No setting is required)

Model	RAS-2WHVRP RASM-2VRE
Setting position	
Model	**RAS-2.5WHVRP**
Setting position	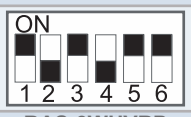
Model	**RAS-3WHVRP RASM-3VRE**
Setting position	

◆ DSW4 / RSW1: No setting is required (Do not change)

Factory setting	
Factory setting position.	

◆ DSW5: End terminal resistance (No setting is required)

Setting before shipment	

◆ DSW6: No setting is required (Do not change)

Factory setting	

◆ DSW7: No setting is required (Do not change)

Factory setting	

◆ DSW302: Piping Length Setting (Setting is required)

Setting before shipment	
Pipe length (<5m)	
Pipe length (≥30m)	

9.6.1.3 LED indication

Name	Colour	Indication
PCB1		
LED1	Red	Power
LED2	Green	Communication with inverter
LED3	Yellow	H-Link transmission
LED4	Yellow	Not used
LED351	Red	For inspection
LED353	Red	For inspection
PCB2		
LD1	Red	For inspection
LD2	Red	For inspection
LD3	Red	For inspection
LD4	Red	For inspection

9.6.2 YUTAKI unit

9.6.2.1 Location of DIP switches and rotary switches

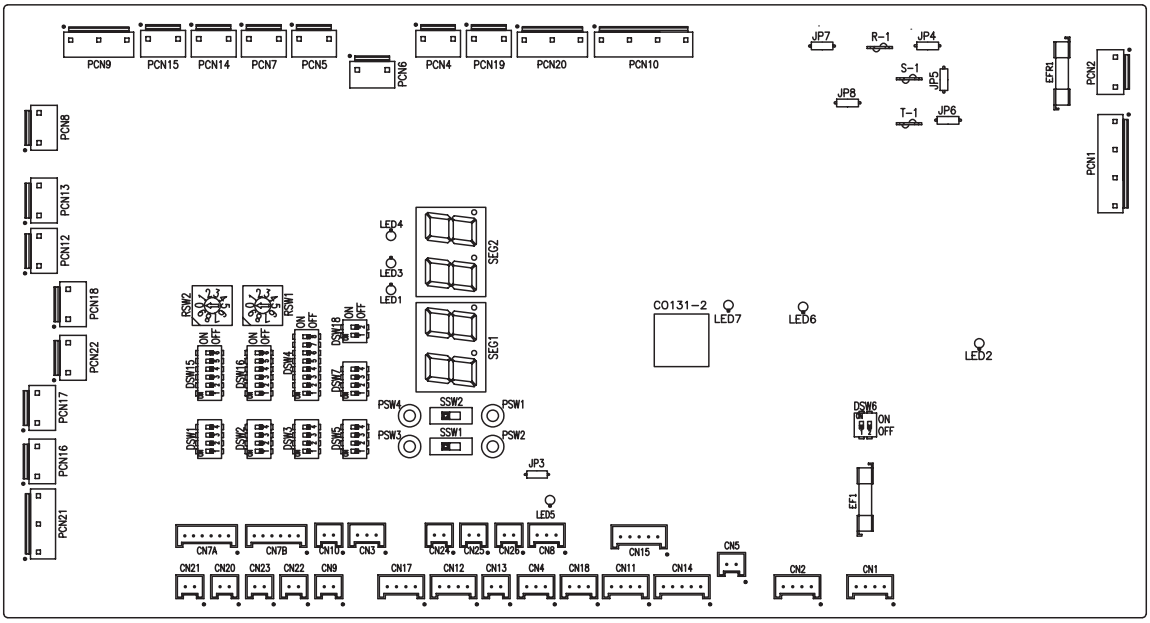

9.6.2.2 Function of DIP switches and rotary switches

NOTE

- *The mark "■" indicates the dip switches positions.*
- *No mark "■" indicates pin position is not affected.*
- *The figures show the settings before shipment or after selection.*
- *"Not used" means that the pin must not be changed. A malfunction might occur if changed.*

CAUTION

Before setting dip switches, first turn the power supply OFF and then set the position of dip switches. If the switches are set without turning the power supply OFF, the contents of the setting are invalid.

◆ DSW1: Additional setting 0

Factory setting. No setting is required.

YUTAKI S (*)	
YUTAKI S COMBI (*)	
YUTAKI M (*)	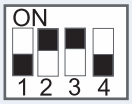

NOTE

(*): In case of installing the "Cooling kit" accessory, set the pin 4 of DSW1 to ON in order to enable the cooling operation.

◆ DSW2: Unit capacity setting

Factory setting. No setting is required.

2.0 HP	2.5 HP	3.0 HP

◆ DSW3: Additional setting 1

Setting before shipment	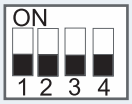

◆ DSW4: Additional setting 2

Setting before shipment	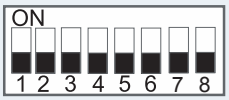
DHW defrost	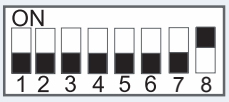
Heater forced OFF	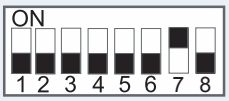
Unit and installation pipes antifreeze protection	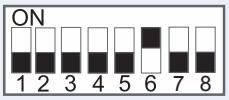
Standard / ECO water pump operation	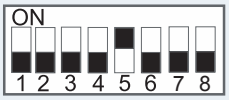
Electric heater or boiler emergency mode	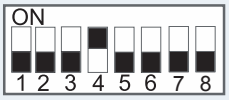
DHW tank's heater operation	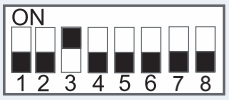

DHW 3-way valve forced ON (All models)	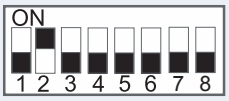
Mirror function (YUTAKI M)	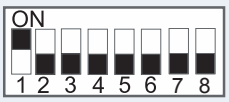

⚠ CAUTION

- *Never turn all DSW4 dip switch pins ON. If this happens, the software of the unit will be removed.*
- *Never activate "Heater Forced OFF" and "Electric heater or boiler emergency mode" at the same time.*

◆ DSW5: Additional setting 3

In the cases where the outdoor unit is installed into a location where its own outdoor ambient temperature sensor can not give a suitable temperature measurement to the system, it is available the 2nd outdoor ambient temperature sensor as accessory. By means of DSW1&2 setting, the preferable sensor for each circuit can be selected.

Factory setting	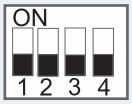
Outdoor unit sensor for circuits 1 and 2.	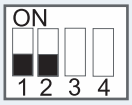
Outdoor unit sensor for circuit 1; Auxiliary sensor for circuit 2.	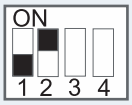
Auxiliary sensor for circuit 1; Outdoor unit sensor for circuit 2.	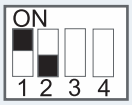
Auxiliary sensor instead of outdoor unit sensor for both circuits.	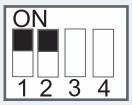
Use the maximum temperature value between Two3 (boiler / heater thermistor) and Two (water outlet thermistor) for water control	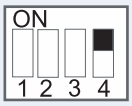

◆ DSW6: Not used

Factory setting (Do not change)	

◆ DSW7: Additional setting 4

Factory setting	
Compatibility with ATW-RTU-04 (When cooling mode operation is needed)	

◆ DSW15 & RSW2 / DSW16 & RSW1: Not used

	DSW16	RSW1
Factory setting	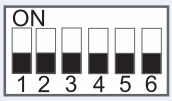	

NOTE

Don't change this setting, otherwise malfunction will be occur.

◆ DSW18: Not used

Factory setting (Do not change)	

◆ SSW1: Remote/Local

Factory setting Remote operation	Remote Local
Local operation	Remote Local

◆ SSW2: Heat/Cool (when SSW1 is in local setting)

Factory setting Heat operation	Heat Cool
Cooling operation (when cooling kit installed)	Heat Cool

9.6.2.3 LED indication

Name	Colour	Indication
LED1	Green	Power indication
LED2	Red	Power indication
LED3	Red	Heat pump operation (thermo ON/OFF)
LED4	Yellow	Alarm (flickering with 1 sec interval)
LED5	Green	Not used
LED6	Yellow	H-Link transmission
LED7	Yellow	H-Link transmission for unit controller

HITACHI

10. Optional functions

Index

10.1 Indoor unit 124

10.1.1 Optional functions by DSW setting 124

10.1.2 Optional functions by Unit controller (PC-ARFH1E) 126

10.1.3 Optional external input/output configuration signals 128

10.2 Additional functions by accessory sensor 131

10.3 Output/input signals for outdoor units and YUTAKI M units 132

10.1 Indoor unit

10.1.1 Optional functions by DSW setting

Code	Optional function description	Explanation
DSW1#4:ON 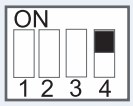	Heating & Cooling (ON) Unit	In case of cooling operation, this DSW should be set to ON + Cooling kit accessory.
DSW3#3:ON 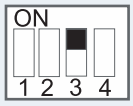	1 step heater for 3 phase unit option	This option can be used to switch all 3 steps of the electric heater at the same time, by means of a DIP-switch setting, in order to prevent 3-phase imbalance by the electric heater steps.
DSW4#8:ON 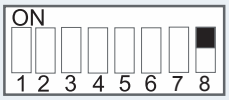	DHW Defrost	This function allows to perform the defrost operation at the DHW tank instead of at the indoor water installation.
DSW4#7:ON 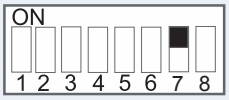	Heating Heater forced OFF	This function forces a permanent OFF of the heater when selecting an installation configuration without the electric heater of the unit
DSW4#6:ON 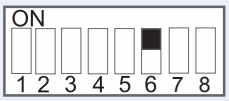	Unit and pipes installation freeze protection	This function allows to start water pump in very low conditions.
DSW4#5:ON 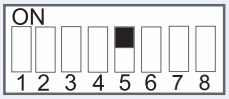	Standard / Economic water pump operation	This function allow to start/stop water pump by two conditions
DSW4#4:ON	Emergency Heater operation manual option	In the event of outdoor unit failure, the required heating can be provided by an electric heater or by a boiler.
DSW4#3:ON 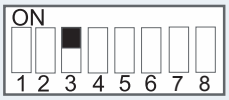	DHW Heater Operation	The electric heater of the domestic hot water tank is disabled by factory setting. This function allows to activate its operation if needed.
DSW4#2:ON 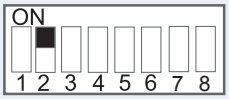	DHW 3 way valve forced ON	When combination with domestic hot water tank, the activation of this function changes the position of the 3-way valve to the DHW operation position, then the unit is forced to work against the heating coil of the DHW tank. This can be used, for example, for a quick water filling of the DHW tank's heating coil.
DSW4#1:ON 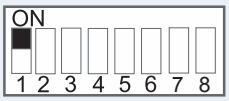	Remote control box for YUTAKI M	This function activates the communication between YUTAKI M PCB and the PCB of the dedicated accessory for mirror function ATW-YMM-01.

Code	Optional function description	Explanation
DSW5#1:OFF;2#OFF 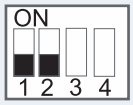 	C1 : Average OU Sensor C2 : Average OU Sensor	A 2nd outdoor ambient temperature sensor is available as an accessory, in case that the built-in ambient temperature sensor of the outdoor unit cannot provide a reliable temperature measurement to the system because of restraints of the installation location. The preferred sensor for each circuit can be selected by means of DSW setting.
DSW5#1:OFF;2#ON 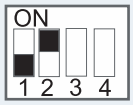 	C1 : Average OU Sensor C2 : Average Aux Sensor	
DSW5#1:ON;2#OFF 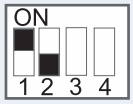 	C1 : Average Aux Sensor C2 : Average OU Sensor	
DSW5#1:ON;2#ON 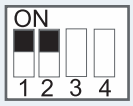 	C1 : Average Aux Sensor C2 : Average Aux Sensor	
DSW5#4:ON 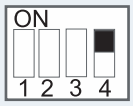 	Use max (Two/Two3) for water control	Some installations need a big buffer tank in combination with auxiliary heating (boiler, pellets, solar panels. etc…). The control of the water can be done by external temperature sensor (Two3) to heat this buffer tank. Refer to *"Manual operation"* chapter in Service Manual.
SSW1 Remote Local 	Remote or Local operation (Manual)	Refer to *"Manual operation"* chapter in Service Manual.
SSW2 Heat Cool 	Cool and Heat operation in case of Local (Manual)	Refer to *"Manual operation"* chapter in Service Manual.

10.1.2 Optional functions by Unit controller (PC-ARFH1E)

10.1.2.1 Optional functions for Space Heating or Space Cooling

Optional function	Explanation	Model
Floor screed drying function (Circuits 1 & 2)	This function is used exclusively for the process of drying screed that has been newly applied to floor heating system. The water temperature set-point follows a predetermined schedule upon activation of the floor screed drying function. For more information refer to Water control chapter	A
Heating Auto ON/OFF	At higher outside temperatures it doesn't make sense to keep heating the building. The YUTAKI S System will switch the heating off when the daily average outdoor temperature of previously day rises above the Summer Switch Auto On/Off Activation Temperature. For more information refer to *"Space water temperature control"* chapter in Service Manual.	A
Auto Heat-Cool	Only available for Cooling and Heating models and cooling mode enabled. By using auto summer switch off average, user can use auto heat cool mode. The end-user sets the desired operation mode on the user interface: Heating, Cooling or Automatic. When Automatic is selected, the change of the operation mode is based on: Averaged outdoor temperature: the operation mode will be changed in order to always be within range determined by the space heating OFF temperature for heating and the space cooling ON temperature for cooling. If the outdoor temperature drops, the operation mode switches to heating and vice versa. For more information refer to *"Space water temperature control"* chapter in Service Manual.	S/SC/M/ YCC
Outdoor temperature average timer	The average timer corrects the influence of ambient temperature variations. The weather-dependent set point calculation is done on the average outdoor temperature. The outdoor temperature is averaged over the selected time period. For more information refer to *"Space water temperature control"* chapter in Service Manual.	A

10.1.2.2 Optional functions for DHW

Optional function	Explanation	Model
DHW anti-Legionella protection	A specific setting is available to protect the DHW system against Legionella, which raises up the DHW temperature over the normal DHW tank temperature setting (using the electric heater of the DHW tank and/or the heat pump) on a periodic basis. For more information refer to *"Sanitary Water Operation"* chapter in Service Manual.	A
DHW re-circulation	This function allows the activation of the water pump for the re-circulation of the hot water from the DHW tank by means of the heat pump. This function can also be used with the anti-legionella protection function. For more information refer to *"Sanitary Water Operation"* chapter in Service Manual.	A
DHW boost	With this function enabled, it is possible to request a heating up of the DHW when user requires an instantaneous delivery of DHW. For more information refer to *"Sanitary Water Operation"* chapter in Service Manual.	A
DHW Mode	DHW operation has two different modes, STANDARD Mode and HIGH DEMAND Mode: • STANDARD Mode: The heating of the domestic hot water shall be started when water temperature in tank is low enough for Heat Pump to be started. DHW is always started heated by Heat Pump. • HIGH DEMAND Mode: The heating of the domestic hot water is started if differential is bigger than T_{DHWON}. It will be started with water tank heater only unless water temperature in tank goes below Heat Pump starting temperature. For more information refer to *"Sanitary Water Operation"* chapter in Service Manual.	A
DHW Control	Unit has 2 DHW heating up control modes that are selected by PC-ARFH1E: H.EFFICIENCY MODE: Control to keep best efficiency (COP). H.SPEED MODE: Control to heat tank as fast as possible.	A

10.1.2.3 Optional functions for Heat pump

Optional function	Explanation	Model
Hydraulic separator combination	In some cases, water pump of the YUTAKI unit is not sized for big heating installation (small water pump). In this case, a hydraulic separator or buffer tank and secondary water pump has to be used to ensure proper water pump dimensioning. The boiler is configured in parallel with the heat pump. A hydraulic separator or buffer tank has to be used to ensure proper hydraulic balancing. Additional Water pump (WP3) and water sensor (Two3) are needed for boiler combination control (automatic added when Boiler combination is enabled). For more information refer to *"Space water temperature control"* chapter in Service Manual.	S/SC/M
Electrical heater or boiler emergency mode	For the use of the electrical heater or boiler in case of outdoor unit fault, additional setting shall be applied into IU setting: Electrical heater emergency can be both automatic or manual switched ON by the user and the configuration must be done from the Unit controller For more information refer to *"Auxiliary electric heater for space heating"* chapter in Service Manual.	A
Power meter data control	The measuring of the real power consumption can be done connecting an external power meter. The number of pulses of the power meter is a variable which must be set through the unit controller. By this, every pulse input is added into its corresponding operation mode (Heating, Cooling, DHW Operation). Two possible options: - One power meter for all installation (IU+OU). - Two separated power meters (one for IU and one for OU). For more information refer to *"Heat Pump optional functions"* chapter in Service Manual.	S/SC/M
Capacity data control	Due to usage of Water temperature inlet and outlet + water flow leve, a estimation of capacity can be checked. This screens show the value of kWh for each zone (Heating,Cooling, DHW, swimming pool and its total) and also let to see the values month by month. For more information refer to *"Heat Pump optional functions"* chapter in Service Manual.	S/SC/M
Smart Function	This function can be used to block or limit the heat pump or increase demand due to electricity availability. For more information refer to *"Heat Pump optional functions"* chapter in Service Manual.	A
Air Purge	Air purge function drives the pump in a way for evacuating air bubbles in the installation. For more information refer to *"Heat Pump optional functions"* chapter in Service Manual.	S/SC/M
Unit Test Run	Test run is a working mode used when commissioning the installation. Some settings are made to let the installer an easy job. For more information refer to *"Heat Pump optional functions"* chapter in Service Manual.	S/SC/M
Night shift	Night shift operation reduce compressor load in order to reduce environmental noise during night. It can be configured as a daily timer or launched from favourite button. For more information refer to *"Heat Pump optional functions"* chapter in Service Manual.	S/SC/M

10.1.2.4 Optional functions for Unit controller (PC-ARFH1E)

Optional function	Explanation	Model
Favourite action	This favourite button has the possibility to customize the action according on system configuration: Holiday Eco/Comfort Timer Night shift DHW Boost	A
UTC Zone	UTC Zone: Europe spans 7 primary time zones (5 of them can be seen on the map in this article, while 2 other zones contain the European part of Kazakhstan and some very eastern territories of European Russia). Most of European countries use daylight saving time and switch to it at the same moment, which is 'harmonise' their summer time adjustment	A
European summer time	When European summer time is activated, it should change the time when the country / UTC zone is doing it.	A
Holidays	Holidays function is only available for room thermostat view of PC-ARFH1E. Holidays let the user specify a date and hour for the Room Setting to be OFF with the configured setting.	A

10.1.3 Optional external input/output configuration signals

The system has 7 input and 4 output optional signals (+ 4 output signals when using accessory). The new YUTAKI series allow different ports to be configured for those I/O signals, as well.

The user can configure those input signal to perform different functions from the unit controller. This is briefly explained in the next tables:

Input signals and input ports

Code	Name	Port	Input
i1	Input 1	TB2 #13&14	230 V
i2	Input 2	TB2 #13&15	230 V
i3	Input 3	TB2 #16&17	230 V
i4	Input 4	TB2 #16&18	230 V
i5	Input 5	TB2 #16&19	230 V
i6	Input 6	TB2 #16&20	230 V
i7	Input 7	TB2 #16&21	230 V

Input functions (To be configured from the unit controller)

Function #	Input	Description
0	Disabled	-
1	Demand ON/OFF	Send Demand ON or OFF Operation to Circuit 1 and Circuit 2
2	Smart Act./SG Ready Input 1	This function must be used to block or limit the heat pump when restricted by Electric company. It allows an external Smart switch device to switch off or reduce consumption of the heat pump during time of peak electricity demand. In case of use of Smart Grid Ready application, this input is used as a digital input 2 and allows four different operating modes
3	Swimming pool	When YUTAKI M is used to warm th swimming pool water, this input is used as a feedback for swimming pool water pump.
4	Solar	In case of combine YUTAKI with solar panels, this input is used as a feedback for solar station ready operation.
5	Operation mode	Cool/Heat must be changed by an input of an external contact signal. Contact signal is edge detection; Cool/Heat changeover by unit controller is also available
6	DHW boost	With this function enabled, it is possible to request a heating up of the DHW when user requires an instantaneous delivery of DHW.
7	Power meter 1	Input used as kW/h pulse count for Energy data recording
8	Demand ON/OFF C1	Send Demand ON or OFF Operation only to Circuit 1
9	Demand ON/OFF C2	Send Demand ON or OFF Operation only to Circuit 2
10	Forced heating	Forced Heating Demand by input of contact signal from outside
11	Forced cooling	Forced Cooling Demand by input of contact signal from outside
12	Power meter 2	Input used as kW/h pulse count for Energy data recording
13	ECO mode C1 & C2	Water temperature setting for Circuit 1 and Circuit 2 it is reduced by ECO operation mode (Default 3ºC) by input of contact signal from outside
14	ECO mode C1	Water temperature setting for Circuit 1 it is reduced by ECO operation mode (Default 3ºC) by input of contact signal from outside
15	ECO mode C2	Water temperature setting for Circuit 2 it is reduced by ECO operation mode (Default 3ºC) by input of contact signal from outside
16	Force OFF	Force OFF operation for unit. RCS will continue as normally set but will show indication that operation is forbidden
17	SG Ready Input 2	In case of want to use Smart Grid Ready application, this input is used as a digital input 2 and allow four different operating modes

Output signals and output ports

Code	Name	Port	Output
o1	Output 1	TB2 #34 (N) & 35 (L)	230 V
o2	Output 2	TB2 #34 (N) & 36 (L)	230 V
o3	Output 3	TB2 #37&38	Free voltage signal
o4	Output 4	TB2 #39&40	Free voltage signal
o5	Output 5	CN20 #1-2	12Vdc signal
o6	Output 6	CN21 #1-2	12Vdc signal
o7	Output 7	CN22 #1-2	12Vdc signal
o8	Output 8	CN23 #1-2	12Vdc signal

Output functions (To be configured from the unit controller)

Function #	Output	Description
0	Disabled	
1	3WV SWP	In case of combine YUTAKI with swimming pool, this output is used to drive 3 way valve swimming pools.
2	WP3	In case of combine YUTAKI with boiler or hydraulic separator, this output is used to drive water pump 3.
3	Boiler combination	In case of combine YUTAKI with boiler, this output is used to switch ON it.
4	Solar pump	In case of combine YUTAKI with solar panel, this output is used to drive water pump station
5	Alarm signal	Output when an “Alarm Code” is received from Indoor Unit or outdoor unit.
6	Operation signal	Output in case that "Thermo-ON" signal in any condition.
7	Cooling signal	Output in case that "Thermo-ON" signal in Cooling operation.
8	Demand-ON signal circuit 1	Signal is enabled when circuit 1 is operating in Demand-ON.
9	Heating signal	Output in case that "Thermo-ON" signal in Heating operation.
10	DHW signal	Output in case that "Thermo-ON" signal in DHW operation.
11	Solar overheat	Output in case that solar temperature signal is active when solar overheat (only when solar combination status is total control).
12	Defrost	Output if the operation state of the outdoor unit when is defrosting.
13	DHW re-circulation pump	In case of re-circulation pump enabled for HSW tank.
14	Heater relay 1	In case of Heater operation for YUTAKI M. Output for Relay 1.
15	Heater relay 2	In case of Heater operation for YUTAKI M. Output for Relay 2.

10.2 Additional functions by accessory sensor

HITACHI offers to its users the option to add more functions to the inputs from signals coming from some specific sensors. The configuration for this purpose is explained below:

I/O Terminal name		Port for setting (Connector number)	Factory default setting		Input/Output type
I/O	Display		Setting contents	Function #	
Sensor 1	A1	CN26 #2	Disabled	0	NTC
Sensor 2	A2	CN25 #1-2	Disabled	0	NTC
Sensor 3	A3	CN5 #1	Disabled	0	NTC

Function of sensors

Function #	Input	Description
1	Boiler combination/Two3	This sensor is used in case to combine any YUTAKI M with an external boiler.
2	Swimming pool	When combining YUTAKI with swimming pool, this sensor is used to read the temperature from the water of the swimming pool.
3	Solar panel sensor	When combining YUTAKI with solar panels, this sensor is used to read the temperature from the solar panel.
4	Zone 1 & 2 ambient sensor	If Aux1 and Aux2 sensors are both connected and enabled at the unit controller configuration, the detection of ambient temperature value is carried out by these sensors. The ambient temperature setting for each circuit is set from the unit controller or central platform. The temperature value detected by each sensor is applied to the corresponding circuit.
5	Zone 1 ambient sensor	If Aux1 and Aux2 sensors are both connected and enabled at the unit controller configuration, the detection of ambient temperature value is carried out by these sensors. The ambient temperature setting for each circuit is set from the unit controller or central platform. The temperature value detected by each sensor is applied to the circuit 1.
6	Zone 2 ambient sensor	If Aux1 and Aux2 sensors are both connected and enabled at the unit controller configuration, the detection of ambient temperature value is carried out by these sensors. The ambient temperature setting for each circuit is set from the unit controller or central platform. The temperature value detected by each sensor is applied to the circuit 2.
7	Second outdoor ambient	An outside temperature sensor can be directly connected to the controller in case the heat pump is located in a position not suitable for this measurement.

10.3 Output/input signals for outdoor units and YUTAKI M units

◆ Output signals through 7-segment display on the unit PCB

The system has several output signals, which can be selected using the following connectors of the outdoor unit and YUTAKI M PCB:

- Output connector CN7, which has two ports to configure two optional output signals.

The selection of these output signals represents the selection of some optional functions programmed in the PCB of the RAS unit through the 7-segment display.

NOTE

- *Do not set same function to multiple output ports. If set, the setting of the higher output number is cleared to 00.*
- *Please refer to the Service Manual for detailed information of optional external input and output signals.*

◆ Output signals on outdoor units and YUTAKI M units

Indication	Output signal	Application
0	No setting application	No setting.
1	Operation signal	This signal allows to notify that the unit is operating. It enables to start up additional systems such as humidifiers, fans and other additional air-conditioning systems.
2	Alarm signal	This signal allows to notify that protection devices have been activated and to transfer it to additional systems.
3	Compressor ON signal	This signal allows to notify that the compressor is activated. This function can be applied for situations such as checking signals during remote-control operation and for the interlock of the RAS unit.
4	Defrost operation signal	This signal allows to notify that the unit is under defrosting operation.

HITACHI

Johnson Controls-Hitachi Air Conditioning Spain, S.A.U.
Ronda Shimizu, 1 - Polig. Ind. Can Torrella
08233 Vacarisses (Barcelona) Spain

HITACHI certifies that our products have met EU consumer safety, health and environmental requirements.

ER-0198/1996 GA-1999/0044

Johnson Controls-Hitachi Air Conditioning Spain, S.A.U. is certified with:
ISO 9001 of AENOR, Spain for its Quality Management accordance with the standard.
ISO 14001 of AENOR Spain for its Environmental Management systems accordance with the standard.

JQA-1084 EC97J1107

HITACHI air conditioning products are manufactured according to:
ISO 9001 of JQA, Japan for its Quality Management accordance with the standard.
ISO 14001 of JACO, Japan for its Environmental Management accordance with the standard.

HITACHI meets the requirements of the KEYMARK Certification Scheme.
See Heat Pump KEYMARK database for detailed information.

TCGB0123 rev.2 - 10/2019

Printed in Spain