HITACHI

SET FREE MINI SERIES
FS(V)NME
FSXNME

Technical Catalogue

RAS-(4-6)FS(V)NME
RAS-(8-12)FSXNME

HITACHI

Contents

General information 1

General data 2

Capacities and selection data 3

Acoustic characteristics curves 4

Working range 5

General dimensions 6

Refrigerant cycle 7

Piping work and refrigerant charge 8

Electrical wiring 9

Optional functions 10

Troubleshooting 11

Capacity tables (partial loads) 12

General Index

1. General information 1

1.1 General information 2

1.1.1 General notes 2
1.1.2 Norms and Regulations 2

1.2 Safety 3

1.2.1 Applied symbols 3

1.3 Product classification 4

1.3.1 Outdoor unit 4
1.3.2 Indoor unit 4
1.3.3 CH-Box 4

1.4 Product line-up 5

1.4.1 Product line-up outdoor unit 5
1.4.2 Product line-up CH-Box 5
1.4.3 Product line-up indoor units 6
1.4.4 Product line-up HYDRO FREE 11
1.4.5 Product line-up: KPI energy recovery unit 12
1.4.6 Product line-up: DX-Interface 12
1.4.7 Product line-up: Econofresh 12
1.4.8 Accessory code list 13

2. General data 15

2.1 General data 16

2.1.1 General considerations 16
2.1.2 RAS-FSVNME models 17
2.1.3 RAS-FSNME models 18
2.1.4 RAS-FSXNME models 19
2.1.5 CH-Box 20

2.2 Cooling and heating performance (efficiencies / seasonal efficiencies) 21

2.3 Component data 21

2.3.1 FS(V)NME 21
2.3.2 FSXNME 22

2.4 Electrical data 23

2.4.1 General considerations 23
2.4.2 Electrical data 23

3. Capacities and selection data 25

3.1 Procedure for selection of the system 26

3.1.1 SET FREE mini system posibilities 26
3.1.2 Check points for system installation 28
3.1.3 Selection procedure example 30
3.1.4 Selection procedure example with HYDRO FREE models 32

3.2 Indoor unit combinability 34

3.2.1 Important considerations 34

3.3 Correction factor depending on the pipe length 35
3.3.1 Cooling capacity correction factor depending on the pipe length 35
3.3.2 Heating capacity correction factor depending on the pipe length 37
3.4 Correction factor depending on defrost 38
3.5 Correction factor depending on the altitude 39
3.6 Capacity curves 39
3.7 Nominal capacity tables 41
3.7.1 FS(V)NME 41
3.7.2 FSXNME 42

4. Acoustic characteristics curves 43
4.1 Overall sound level 44
4.2 Sound pressure of RAS-(4-6)FS(V)NME outdoor units 45
4.3 Sound pressure of RAS-(8-12)FSXNME outdoor units 46
4.4 Sound pressure of CH-Box (Only for heat recovery system) 47

5. Working range 49
5.1 Voltage supply 50
5.2 Working range 50

6. General dimensions 53
6.1 RAS-(4-6)FS(V)NME dimensions 54
6.2 RAS-(8-12)FSXNME dimensions 55
6.3 CH-Box dimensions 56
6.4 Clearance conditions 59
6.5 Service space 62
6.5.1 Service space for RAS-(4-6)FS(V)NME and RAS-(8-12)FSXNME 62
6.5.2 Service space for CH-Box 62

7. Refrigerant cycle 65
7.1 RAS-(4-6)FS(V)NME 66
7.2 RAS-(8-12)FSXNME 67
7.3 CH-Box 68

8. Piping work and refrigerant charge 71
8.1 Refrigerant pipe selection 72

8.1.1 Heat pump systems 73
8.1.1.1 Model sizes 74
8.1.2 Heat recovery systems 75
8.1.2.1 Model sizes 77

8.2 Pipe working conditions 78
8.2.1 RAS-(4-6) FS(V)NME 78
8.2.2 RAS-(8-12)FSXNME 79
8.2.3 Pipe branching restrictions (Installation with Main Piping Branch) 82
8.2.4 Piping work for CH-Box CH-AP(160/280)SSX 83
8.2.4.1 Piping connection 84
8.2.4.2 Piping insulation 85
8.2.5 Piping work for CH-Box CH-AP(04-16)MSSX 85
8.2.5.1 Selecting Piping Size 86
8.2.5.2 Piping insulation 89

8.3 Vaccum pumping 91

8.4 Refrigerant charge 92

8.5 Additional refrigerant charge calculation 93
8.5.1 For RAS-(4-6)FS(V)NME 94
8.5.2 For RAS-(8-12)FSXNME 94

8.6 Precautions in the event of refrigerant leaks 95
8.6.1 Maximum permitted concentration of hydrofluorocarbon (HFC) 95
8.6.2 Calculation of the refrigerant leakage 95
8.6.3 Countermeasures in the event of refrigerant leaks 96

8.7 Drain kit components 96

9. Electrical wiring 97

9.1 General information 98

9.2 General verifications 98

9.3 Setting of the DSW 99

9.4 DSW setting for outdoor unit 99
9.4.1 RAS-(4-6)FSVNME 99
9.4.2 RAS-(4-6)FSNME 100
9.4.3 RAS-(8-12)FSXNME 102

9.5 Outdoor and indoor units electrical settings 104
9.5.1 Connection in outdoor unit 104
9.5.2 Connection of indoor units 106

9.6 Connection of the power supply circuits 109
9.6.1 Cable sizes 109
9.6.2 Main breaker switch 109
9.6.3 Electromagnetic compatibility 110

9.7 CH-Box electrical wiring and settings 111
9.7.1 CH-Box CH-AP(160/280)SSX 111

9.7.2 CH-Box CH-AP(04-16)MSSX 112

10. Optional functions 115

10.1 Optional functions available in the outdoor units 116

11. Capacity tables (partial loads) 119

11.1 Cooling capacity tables according to total power of combined indoor units 120

11.1.1 FS(V)NME 120

11.1.2 FSXNME 130

11.2 Heating capacity tables according to total power of combined indoor units 140

11.2.1 FS(V)NME 140

11.2.2 FSXNME 150

12. Troubleshooting 161

12.1 On-screen displays during abnormal operation 162

12.2 Alarm codes 163

HITACHI

1. General information

Index

1.1 General information 2
1.1.1 General notes 2
1.1.2 Norms and Regulations 2
1.2 Safety 3
1.2.1 Applied symbols 3
1.3 Product classification 4
1.3.1 Outdoor unit 4
1.3.2 Indoor unit 4
1.3.3 CH-Box 4
1.4 Product line-up 5
1.4.1 Product line-up outdoor unit 5
1.4.2 Product line-up CH-Box 5
1.4.3 Product line-up indoor units 6
1.4.4 Product line-up HYDRO FREE 11
1.4.5 Product line-up: KPI energy recovery unit 12
1.4.6 Product line-up: DX-Interface 12
1.4.7 Product line-up: Econofresh 12
1.4.8 Accessory code list 13

1.1 General information

1.1.1 General notes

© Copyright 2019 Johnson Controls-Hitachi Air Conditioning Spain, S.A.U. - All rights reserved.

No part of this publication may be reproduced, copied, filed or transmitted in any shape or form without the permission of Johnson Controls-Hitachi Air Conditioning Spain, S.A.U.

As a result, some of the images or data used to illustrate this document may not refer to specific models. No claims will be accepted based on the data, illustrations and descriptions included in this manual.

Within the policy of continuous improvement of its products, Johnson Controls-Hitachi Air Conditioning Spain, S.A.U. reserves the right to make changes at any time without prior notification and without being compelled to introduce them into products previously sold. This document may, therefore, have been subject to amendments during the life of the product.

HITACHI makes every effort to offer correct, up-to-date documentation. Despite this, printing errors cannot be controlled by HITACHI and are not its responsibility.

No type of modification must be made to the equipment without prior, written authorisation from the manufacturer.

HITACHI pursues a policy of continuing improvement in design and performance of products. The right is therefore reserved to vary specifications without notice.

1.1.2 Norms and Regulations

Following Regulation EU No. 517/2014 on Certain Fluorinated Greenhouse gases, it is mandatory to fill in the label attached to the unit with the total amount of refrigerant charged on the installation.

Do not vent R410A into the atmosphere: R410A are fluorinated greenhouse gases covered by the Kyoto protocol global warming potential (GWP) R410A: = 2088.

Tn of CO_2 equivalent of fluorinated greenhouse gases contained is calculated by indicated GWP multiply by Total Charge (in kg) indicated in the product label and divided by 1000.

Appropriate refrigerant

The refrigerant used in each unit is identified on the specification label and manuals of the unit. HITACHI shall not be held liable for any failure, trouble, malfunction or accident caused by units illegally charged with refrigerants other than the specified one.

Consequences of charging non-specified refrigerant

It may cause mechanical failure, malfunction and other accidents. It may cause operational failure of protection and safety devices of air conditioners. It may also cause lubrication failure of the sliding part of the compressor due to deterioration of refrigerant oil.

In particular, hydrocarbon refrigerants (such as propane, R441A, R443A, GF-08, etc.) are not allowed, since these are combustible and may cause major accidents such as fire and explosion in case of improper handling.

Once a non-specified refrigerant has been charged, no further servicing (including draining of refrigerant) shall be performed, even in case of malfunction. Improper handling of refrigerant may be a cause of fire and explosion, and servicing in such cases may be considered an illegal act.

End clients and costumers shall be informed that servicing is not approved, and the installer who charged the non-specified refrigerant shall be asked to fix the unit.

HITACHI will accept no responsibility for units that have been charged with non-specified refrigerant once.

1.2 Safety

1.2.1 Applied symbols

During normal air to water heat pump system design work or unit installation, greater attention must be paid in certain situations requiring particular care in order to avoid damage to the unit, the installation or the building or property.

Situations that pose a risk to the safety of those in the surrounding area or to the unit itself are clearly indicated in this manual.

A series of special symbols are used to clearly identify these situations.

Pay close attention to these symbols and to the messages following them, as your safety and that of others depends on it.

DANGER

- ***The text following this symbol contains information and instructions relating directly to your safety.***
- ***Not taking these instructions into account could lead to serious, very serious or even fatal injuries to you and others.***

In the texts following the danger symbol you can also find information on safe procedures during unit installation.

CAUTION

- *The text following this symbol contains information and instructions relating directly to your safety and physical wellbeing.*
- *Not taking these instructions into account could lead to minor injuries to you and others in the proximities of the unit.*
- *Not taking these instructions into account could lead to unit damage.*

In the texts following the caution symbol you can also find information on safe procedures during unit installation.

NOTE

- *The text following this symbol contains information or instructions that may be of use or that require a more thorough explanation.*
- *Instructions regarding inspections to be made on unit parts or systems may also be included.*

1.3 Product classification

1.3.1 Outdoor unit

Unit type (outdoor unit): RAS
Position-separating hyphen (fixed)
System capacity (HP): (4-12)
SET FREE series
V : Single phase unit (1~ 230V 50Hz)
- : Three phase unit (3N~ 400V 50Hz)
X : Heat Pump system (2 pipes) and Heat Recovery system (3 pipes)
- : Heat Pump system (2 pipes) only
Refrigerant type N: R410A
M: Side Flow VRF Series
E: Made in Europe

RAS	–	X	FS	(V)	(X)	N	M	E

1.3.2 Indoor unit

The following information is only for reference. Indoor Unit information are not included in this technical document.

Unit type (indoor unit): RCI, RCIM, RCD, RPC, RPI, RPIM, RPK, RPF, RPFI
Position-separating hyphen (fixed)
Capacity (HP):0.4, 0.6, 0.8, 1.0, 1.5, 2.0, 2.5, 3.0, 4.0, 5.0, 6.0, 8.0, 10.0, 16.0, 20.0
FS = SYSTEM FREE
N = R410A refrigerant
H = Hotel (RPK-(0.6-1.5) only)
2/3/4/5 = series
P= Pair
E = Made in Europe
M = Made in Malaysia
– = Made in Japan
(-DU) = Drain Up (RPIM only)
(-f) = Non-flammable insulation (RPI-(8.0-20.0)FSN3E-f only

XXX	–	X.X	FS	N	(H)	X	(P)	(X)	(-xx)

1.3.3 CH-Box

Single

Type of unit: CH (Cooling/Heating Changeover unit)
Position-separating hyphen (fixed)
Refrigerant type: AP: R410A
Maximum connectable indoor unit capacity (HP)
160: 6.0HP or less (Max. 16kW)
280: 6.1HP - 10.0HP (Max. 28kW)
Applicable System SSX: for Heat Recovery System (3 pipes system)

CH	–	AP	(160/280)	SSX

Multiple

Type of unit: CH (Cooling/Heating Changeover unit)
Position-separating hyphen (fixed)
Refrigerant type:
AP: R410A
Maximum connectable indoor unit capacity (HP)
4 branches: 16.0HP or less (Max. 44.8kW)
8 branches: 30.0HP or less (Max. 85kW)
12 branches: 30.0HP or less (Max. 85kW)
16 branches: 30.0HP or less (Max. 85kW)
M: Multiple
Applicable System SSX: for Heat Recovery System (3 pipes system)

CH	–	AP	(04/08/12/16)	M	SSX

1.4 Product line-up

1.4.1 Product line-up outdoor unit

1~ 230V 50Hz	3N~ 400V 50Hz	
Unit	Unit	Unit
RAS-4FSVNME	RAS-4FSNME	
RAS-5FSVNME	RAS-5FSNME	
RAS-6FSVNME	RAS-6FSNME	
		RAS-8FSXNME
		RAS-10FSXNME
		RAS-12FSXNME

1.4.2 Product line-up CH-Box

CH-Box				
Single		CH-AP160SSX	60292158	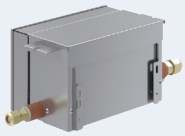
		CH-AP280SSX	60292159	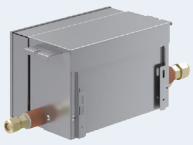
Multiple	4 Branch	CH-AP04MSSX	60292160	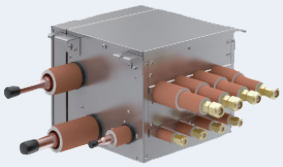
	8 Branch	CH-AP08MSSX	60292161	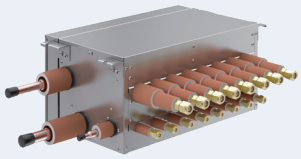
	12 Branch	CH-AP12MSSX	60292162	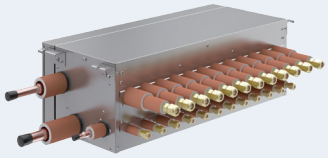
	16 Branch	CH-AP16MSSX	60292163	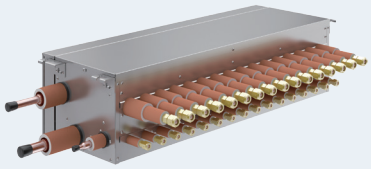

1.4.3 Product line-up indoor units

NOTE

- *The indoor unit models and codes are the last updated at time of publication; other previous models and coming developments could be available for combination with this outdoor unit series.*
- *Check the exact classification for each unit (model, type, power and series) in "1.3.2 Indoor unit".*

◆ RCI and RCIM indoor units

RCI		RCIM	
❄ ☀			
4-way cassette		4-way cassette (compact)	
Unit	Code	Unit	Code
		RCIM-0.4FSN4E (*1)	7E411148
		RCIM-0.6FSN4E (*2)	7E411137
		RCIM-0.8FSN4E	7E411100
RCI-1.0FSN4	70405001	RCIM-1.0FSN4E	7E411101
RCI-1.5FSN4	70405002	RCIM-1.5FSN4E	7E411102
RCI-2.0FSN4	70405003	RCIM-2.0FSN4E	7E411103
RCI-2.5FSN4	70405004	RCIM-2.5FSN4E	7E411104
RCI-3.0FSN4	70405005		
RCI-4.0FSN4	70405007		
RCI-5.0FSN4	70405008		
RCI-6.0FSN4	70405009		
Panel		Panel	
P-N23NA2 (without Motion Sensor)	70532000	P-AP56NAM (without Motion Sensor)	60297318

NOTE

- *The RCI and RCIM models must be used in combination with the indicated panels.*
- *(*1): Follow the detailed information about the combinability and restrictions for 0.4 HP Indoor Units, which can only be used in combination with SET FREE mini, FSXNSE and FSXNPE series.*
- *(*2): 0.6 HP Indoor Units can only be used in combination with SET FREE mini, FSXNSE and FSXNPE series.*

◆ RCD and RPC indoor units

RCD				RPC	
❄ ☀					
2-way cassette				Ceiling type	
Unit	Code	Unit	Code	Unit	Code
RCD-0.8FSN3	60278242				
RCD-1.0FSN3	60278243				
RCD-1.5FSN3	60278244			RPC-1.5FSN3	60278164
RCD-2.0FSN3	60278245			RPC-2.0FSN3	60278165
RCD-2.5FSN3	60278246			RPC-2.5FSN3	60278166
RCD-3.0FSN3	60278247			RPC-3.0FSN3	60278167
		RCD-4.0FSN3	60278248	RPC-4.0FSN3	60278168
		RCD-5.0FSN3	60278249	RPC-5.0FSN3	60278169
		RCD-6.0FSN3	60278250	RPC-6.0FSN3	60278170
Panel		Panel			
P-AP90DNA	60297319	P-AP160DNA	60297320		

NOTE

The RCD models must be used in combination with the indicated panels.

◆ RPI indoor units

RPI					
❄ ☀					
		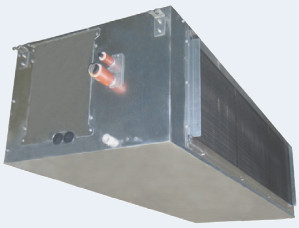			
Indoor ducted unit					
Unit	Code	Unit	Code	Unit	Code
RPI-0.4FSN5E(*1)	7E422048				
RPI-0.6FSN5E (*2)	7E422037				
RPI-0.8FSN5E	7E422013				
RPI-1.0FSN5E	7E422014				
RPI-1.5FSN5E	7E422015				
RPI-2.0FSN5E	7E422016				
RPI-2.5FSN5E	7E422017				
RPI-3.0FSN5E	7E422018				
RPI-4.0FSN5E	7E422020				
RPI-5.0FSN5E	7E422021				
RPI-6.0FSN5E	7E422022				
		RPI-8.0FSN3E RPI-8.0FSN3E-f	7E424010 7E424410		
		RPI-10.0FSN3E RPI-10.0FSN3E-f	7E424011 7E424411		
				RPI-16.0FSN3PE (*3) RPI-16.0FSN3PE-f (*3)	7E425038 7E425438
				RPI-20.0FSN3PE-f (*3) RPI-20.0FSN3PE-f (*3)	7E425039 7E425439

NOTE

- *(*1): Follow the detailed information about the combinability and restrictions for 0.4 HP Indoor Units, which can only be used in combination with SET FREE mini, FSXNSE and FSXNPE series.*
- *(*2): 0.6 HP Indoor Units can only be used in combination with SET FREE FSXNSE and FSXNPE series.*
- *(*3): RPI-FSN3PE(-f) can only be used in combination with SET FREE FSXNSE and FSXNPE series.*

◆ RPIM indoor units

RPIM	
❄ ☀	
Indoor ducted unit (compact)	
Unit	Code
RPIM-0.6FSN4E (*1)	7E430037
RPIM-0.6FSN4E-DU (*1)	7E431037
RPIM-0.8FSN4E	7E430013
RPIM-0.8FSN4E -DU	7E431013
RPIM-1.0FSN4E	7E430014
RPIM-1.0FSN4E -DU	7E431014
RPIM-1.5FSN4E	7E430015
RPIM-1.5FSN4E -DU	7E431015

NOTE

*(*1): 0.6 HP Indoor units can only be used in combination with SET FREE mini, FSXNSE and FSXNPE series.*

◆ RPK, RPF and RPFI indoor units

RPK		RPF		RPFI	
❄ ☀					
Wall type		Floor type		Floor concealed type	
Unit	Code	Unit	Code	Unit	Code
RPK-0.4FSNH4M (*1)	60279066				
RPK-0.4FSN4M (*1)	60279075				
RPK-0.6FSN4M (*2)	60279067				
RPK-0.6FSNH4M (*2)	60279076				
RPK-0.8FSN4M	60279068				
RPK-0.8FSNH4M	60279077				
RPK-1.0FSN4M	60279069				
RPK-1.0FSNH4M	60279078	RPF-1.0FSN2E	7E450001	RPFI-1.0FSN2E	7E460001
RPK-1.5FSN4M	60279070				
RPK-1.5FSNH4M	60279079	RPF-1.5FSN2E	7E450002	RPFI-1.5FSN2E	7E460002
RPK-2.0FSN4M	60279071	RPF-2.0FSN2E	7E450003	RPFI-2.0FSN2E	7E460003
RPK-2.5FSN4M	60279072	RPF-2.5FSN2E	7E450004	RPFI-2.5FSN2E	7E460004
RPK-3.0FSN4M	60279073				
RPK-4.0FSN4M	60279074				
Expansion valve kit [1]					
EV-1.5N1[1]	60921791				

NOTE

- *(*1): Follow the detailed information about the combinability and restrictions for 0.4 HP Indoor Units, which can only be used in combination with SET FREE mini, FSXNSE and FSXNPE series.*
- *(*2): 0.6 HP Indoor Units can only be used in combination with SET FREE mini, FSXNSE and FSXNPE series.*
- *[1] For RPK-(0.4-1.5)FSNH3M models only.*

1.4.4 Product line-up HYDRO FREE

◆ Low temperature

1~ 230V 50Hz					
Unit	Code	Unit	Code	Unit	Code
RWLT-3.0VN1E	7E476018	-	-	-	-
		RWLT-5.0VN1E	7E476021	-	-
		-	-	RWLT-10.0VN1E	7E476024

NOTE

- *For cooling operation, refer to the Cooling kit accessory for HYDRO FREE Low temperature unit.*
- *The PC-ARFWE controller required for the operation of the HYDRO FREE Low temperature is factory supplied in these models.*

◆ High temperature

1~ 230V 50Hz	
Unit	Code
RWHT-5.0VNF1E	7E484021

NOTE

The PC-ARFWE controller required for the operation of the HYDRO FREE High temperature is not factory supplied in these models, and must be ordered as an accessory separately.

Icons description

Icons between brackets mean possible extra operations to the factory-supplied operations (additional accessories, field-supplied accessories or systems can be needed)

: Heating operation

: Domestic hot water (DHW)

: Additional heater (electrical heater accessory or boiler)

: Swimming pool application

: Solar combination

: Cooling operation

1.4.5 Product line-up: KPI energy recovery unit

KPI			
Energy recovery		Active (Energy Recovery+DX section)	
Unit	Code	Unit	Code
KPI-252E4E	70603000		
KPI-502E4E	70603001	KPI-502X4E	70603201
KPI-802E4E	70603002	KPI-802X4E	70603202
KPI-1002E4E	70603003	KPI-1002X4E	70603203
KPI-1502E4E	70603004		
KPI-2002E4E	70603005		

1.4.6 Product line-up: DX-Interface

DX-Interface		
	Unit	Code
Control box	EXV-2.0E2	7E611000
	EXV-2.5E2	7E611001
	EXV-3.0E2	7E611002
Expansion valve box	EXV-4.0E2	7E611003
	EXV-5.0E2	7E611004
	EXV-6.0E2	7E611005
	EXV-8.0E2	7E611006
	EXV-10.0E2	7E611007

1.4.7 Product line-up: Econofresh

Econofresh	
Unit	Code
EF-456N1E	7E560001

NOTE

The EF-456N1E unit can only be installed in combination with the following units (Sales from October 2017):

- *RPI-4.0FSN5E (7E422020)*
- *RPI-5.0FSN5E (7E422021)*
- *RPI-6.0FSN5E (7E422022)*

1.4.8 Accessory code list

HITACHI offers a range of different accessories and remote control systems that can be used with the SET FREE outdoor units. Please consult the corresponding Technical Catalogue for controls.

Name	Description	Code	Figure
DBS-26	Drain discharge connection	60299192	
E-102SN4	Line branch	70524201	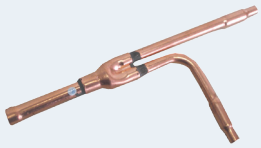
E-162SN4		70524202	
E-52XN3		70525100	
E-102XN3		70525101	
E-162XN3		70525102	
MH-84AN1	Header branch	70522009	
MH-108AN		70522008	
MH-108XN		70523108	

Name	Model	Description		Code	Figure
AG-335A	RAS-(4-6)FS(V)NME, RAS-(8-12)FSXNME	Air flow guide		60291431	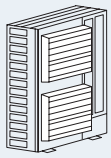
WSP-160A	RAS-(4-6)FS(V)NME	Wind guard		60291753	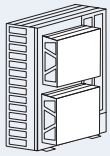
WSP-335A	RAS-(8-12)FSXNME			60291432	
Snow protection hood					
ASG-NP335F1	RAS-(4-6)FS(V)NME	Air outlet	(Zinc plate)	60291771	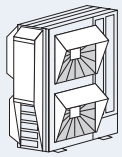
ASG-NP335F	RAS-(8-12)FSXNME			60291433	
ASG-NP335FS4	RAS-(4-6)FS(V)NME		(Stainless plate)	60291940	
ASG-NP335FS	RAS-(8-12)FSXNME			60291433	
ASG-NP160B	RAS-(4-6)FS(V)NME	Air inlet of rear side	(Zinc plate)	60291777	
ASG-NP335B	RAS-(8-12)FSXNME			60291434	
ASG-NP280BS4	RAS-(4-6)FS(V)NME		(Stainless plate)	60291945	
ASG-NP335BS	RAS-(8-12)FSXNME			60291434	
ASG-NP160L	RAS-(4-6)FS(V)NME	Air inlet of left side	(Zinc plate)	60291779	
ASG-NP335L	RAS-(8-12)FSXNME			60291435	
ASG-NP280LS4	RAS-(4-6)FS(V)NME		(Stainless plate)	60291946	
ASG-NP335LS	RAS-(8-12)FSXNME			60291435	

HITACHI

2. General data

Index

2.1 General data 16
2.1.1 General considerations 16
2.1.2 RAS-FSVNME models 17
2.1.3 RAS-FSNME models 18
2.1.4 RAS-FSXNME models 19
2.1.5 CH-Box 20
2.2 Cooling and heating performance (efficiencies / seasonal efficiencies) 21
2.3 Component data 21
2.3.1 FS(V)NME 21
2.3.2 FSXNME 22
2.4 Electrical data 23
2.4.1 General considerations 23
2.4.2 Electrical data 23

2.1 General data

2.1.1 General considerations

1 The heating and cooling capacities indicated refer to the outdoor unit operating with the indoor units at 100% of their capacity, and are based on Standard EN14511.

Operating conditions		Cooling	Heating
Indoor air inlet temperature	DB	27.0 °C	20.0 °C
	WB	19.0 °C	—
Outdoor air inlet temperature	DB	35.0 °C	7.0 °C
	WB	—	6.0 °C

DB: dry bulb; WB: wet bulb.

Pipe length: 7.5 m; pipe height: 0 m

2 The sound pressure level was measured under the following conditions:

a. 1 m from the surface of the unit's service cover and 1.5 m from floor level.

b. The provided data corresponds to cooling mode. In the case of heating mode, the sound pressure level increases from 1 to 2 dB(A).

c. The provide data has been measured in an anechoic chamber, so the reflected sound must be taken into account for installation.

3 Sound power levels were measured in a reverberant room, in accordance with the EN12102 standard. Used environment conditions are the same as specified in EN14511 for performance test.

4 If the main refrigerant pipe size specified in the table is not available at the installation location, select the size given in the chapter “Piping work and refrigerant charge”.

2.1.2 RAS-FSVNME models

Model			RAS-4FSVNME	RAS-5FSVNME	RAS-6FSVNME
Power Supply			1N~ 230V 50Hz		
Nominal Cooling Capacity		kW	12.1	14.0	16.0
Nominal Heating Capacity		kW	12.5	16.0	18.0
Cabinet Colour (Munsell code)			Natural Grey (1.0Y8.5/0.5)		
Sound Power Level		dB(A)	69	69	70
Sound Pressure Level (Night mode)		dB(A)	52 (45)	52 (47)	53 (48)
Outer Dimensions	Height x Width x Depth	mm	1380 x 950 x 370		
Weight	Net Weight	kg	114	114	118
	Gross Weight	kg	124	124	128
Refrigerant			R410A		
Refrigerant Charge (before Shipment)		kg	3.7	3.7	4.1
Flow Control			Micro-Computer control expansion valve		
Compressor	Type		SHEC Rotary		
	Model		ATH356	ATH356	ATH420
	Quantity		1	1	1
	Motor Output (Pole)	kW	3.15 (4)	3.15 (4)	3.66 (4)
Refrigeration Oil	Type		α 68HES-H		
	Charge	L/Unit	1.65	1.65	1.65
Heat Exchanger			Multi Pass Cross - Finned Tube		
Condenser Fan	Type		Axial		
	Quantity		2	2	2
	Air Flow Rate	m^3/min.	145	145	145
Static pressure		Pa	30	30	30
Main Refrigerant Piping	Liquid Line	mm (in.)	9.52 (3/8")	9.52 (3/8")	9.52 (3/8")
	Gas Line	mm (in.)	15.88 (5/8")	15.88 (5/8")	15.88 (5/8")
Packing dimensions	Height x Width x Depth	mm	1515 x 1012 x 460		
Approximate Packing Volume		m^3	0.71		

2.1.3 RAS-FSNME models

Model			RAS-4FSNME	RAS-5FSNME	RAS-6FSNME
Power Supply			3N~ 400V 50Hz		
Nominal Cooling Capacity		kW	12.1	14.0	16.0
Nominal Heating Capacity		kW	12.5	16.0	18.0
Cabinet Colour (Munsell code)			Natural Grey (1.0Y8.5/0.5)		
Sound Power Level		dB(A)	69	69	70
Sound Pressure Level (Night mode)		dB(A)	52 (45)	52 (47)	53 (48)
Outer Dimensions	Height x Width x Depth	mm	1380 x 950 x 370		
Weight	Net Weight	kg	115	115	119
	Gross Weight	kg	125	125	129
Refrigerant			R410A		
Refrigerant Charge (before Shipment)		kg	3.7	3.7	4.1
Flow Control			Micro-Computer control expansion valve		
Compressor	Type		SHEC Rotary		
	Model		ATH356	ATH356	ATH420
	Quantity		1	1	1
	Motor Output (Pole)	kW	3.15 (4)	3.15 (4)	3.66 (4)
Refrigeration Oil	Type		α 68HES-H		
	Charge	L/Unit	1.65	1.65	1.65
Heat Exchanger			Multi Pass Cross - Finned Tube		
Condenser Fan	Type		Axial		
	Quantity		2	2	2
	Air Flow Rate	m^3/min.	145	145	145
Static pressure		Pa	30	30	30
Main Refrigerant Piping	Liquid Line	mm (in.)	9.52 (3/8")	9.52 (3/8")	9.52 (3/8")
	Gas Line	mm (in.)	15.88 (5/8")	15.88 (5/8")	15.88 (5/8")
Packing Dimensions	Height x Width x Depth	mm	1515 x 1012 x 460		
Approximate Packing Volume		m^3	0.71		

2.1.4 RAS-FSXNME models

Model				RAS-8FSXNME	RAS-10FSXNME	RAS-12FSXNME
Power Supply				3N~ 400V 50Hz		
Nominal Cooling Capacity			kW	22.4	28.0	33.5
Nominal Heating Capacity			kW	25.0	31.5	37.5
Cabinet Color (Munsell code)				Natural Grey (1.0Y8.5/0.5)		
Sound Power Level			dB(A)	76	77	77
Sound Pressure Level (Night mode)			dB(A)	55 (50)	59 (53)	60 (53)
Outer Dimensions		Height x Width x Depth	mm	1650 x 1100 x 390		
Weight		Net Weight	kg	188	194	196
		Gross Weight	kg	197	203	205
Refrigerant				R410A		
Refrigerant charge (before Shipment)			kg	4.2	6	6
Flow Control				Micro-Computer Control Expansion Valve		
Compressor		Type		Hermetic (Scroll)		
		Model		AA50PHD	DB65PHD	DC80PHD
		Quantity		1	1	1
		Motor Output (Pole)	kW	3.3 (6)	3.8 (6)	5.4 (6)
Refrigeration Oil		Type		FVC68D		
		Charge	L/Unit	6.0	6.0	6.0
Heat Exchanger				Multi-Pass Cross-Finned Tube		
Condenser Fan		Type		Propeller Fan		
		Quantity		2	2	2
		Air Flow Rate (PRELIMINARY DATA)	m^3/min.	165	185	185
Static pressure			Pa	30	30	30
Main Refrigerant Piping	Heat recovery	Liquid Line	mm (in.)	Ø9.52 (3/8)	Ø9.52 (3/8)	Ø12.7 (1/2)
		Gas Line - Low Pressure	mm (in.)	Ø19.05 (3/4)	Ø22.2 (7/8)	Ø25.4 (1)
		Gas Line - High/Low Pressure	mm (in.)	Ø15.88 (5/8)	Ø19.05 (3/4)	Ø22.2 (7/8)
	Heat pump	Liquid Line	mm (in.)	Ø9.52 (3/8)	Ø9.52 (3/8)	Ø12.7 (1/2)
		Gas Line - Low Pressure	mm (in.)	not used	not used	not used
		Gas Line - High/Low Pressure	mm (in.)	Ø19.05 (3/4)	Ø22.2 (7/8)	Ø25.4 (1)
Packing Dimensions		Height x Width x Depth	mm	1787×1151×500		
Approximate Packing Volume			m^3	1.03		

2.1.5 CH-Box

Type				Single Branch		Multiple Branch			
Model Name				CH-AP160SSX	CH-AP280SSX	CH-AP04MSSX	CH-AP08MSSX	CH-AP12MSSX	CH-AP16MSSX
Electrical	Power Supply			1~ 230V 50Hz					
	Power Consumption		W	5	5	11.2	22.4	33.6	44.8
	Current		A	0.1	0.1	0.2	0.4	0.6	0.8
Maximum Total Capacity			kW	16	28	44.8	85	85	85
Number of Branches(for Indoor Unit)				1	1	4	8	12	16
Maximum Capacity per Branch			kW	-	-	16	16	16	16
Maximum Connectable Indoor Units Per Branch				7	8	6	6	6	6
Dimensions Height x Width x Depth			mm	191 x 301 x 214	191 x 301 x 214	260 x 303 x 352	260 x 543 x 352	260 x 783 x 352	260 x 1023 x 352
Refrigerant				R410A					
Refrigerant piping connection	Outdoor Unit Side	Gas Line (High and Low pressure side)	mm (in.)	Ø15.88 (5/8)	Ø15.88 (5/8)	Ø22.2 (7/8)	Ø22.2 (7/8)	Ø25.4 (1)	Ø28.58 (1-1/8)
		Gas Line (Suction Gas)	mm (in.)	Ø19.05 (3/4)	Ø19.05 (3/4)	Ø25.4 (1)	Ø28.58 (1-1/8)	Ø28.58 (1-1/8)	Ø31.75 (1-1/4)
		Liquid Line	mm (in.)	-	-	Ø12.7 (1/2)	Ø12.7 (1/2)	Ø15.88 (5/8)	Ø19.05 (3/4)
	Indoor Unit Side	Gas Line	mm (in.)	Ø15.88 (5/8)	Ø19.05 (3/4)	Ø15.88 (5/8)	Ø15.88 (5/8)	Ø15.88 (5/8)	Ø15.88 (5/8)
		Liquid Line	mm (in.)	-	-	Ø9.52 (3/8)	Ø9.52 (3/8)	Ø9.52 (3/8)	Ø9.52 (3/8)
Net Weight			kg	6.0	6.0	14.0	25.0	36.0	47.0

Model	Branch	Connectable Indoor Unit total capacity	Number of connectable indoor unit (*)
CH-AP160SSX	1	6.0HP or less (Max. 16kW)	1-7
CH-AP280SSX	1	6.1HP - 10.0HP (Max. 28kW)	1-8

(*) When multiple indoor units are connected to the same CH-Box, they are controlled with the same operation mode.

Model	Branch	Connectable Indoor Unit Total capacity	Number of connectable indoor per Branch (**)
CH-AP04MSSX	4	16.0HP or less (Max. 44.8kW)	1-6
CH-AP08MSSX	8	30.0HP or less (Max. 85kW)	1-6
CH-AP12MSSX	12	30.0HP or less (Max. 85kW)	1-6
CH-AP16MSSX	16	30.0HP or less (Max. 85kW)	1-6

(**) The indoor units connected to the same branch of the CH-Box are controlled with the same operation mode.

NOTE

- *When switching the refrigerant flow channel at Operation ON/OFF, Thermo ON / OFF, Defrost Operation and Operation Mode, refrigerant flow noise may be heard from CH- Box.*
- *Therefore, install the unit in a place such as under the roof of the corridor so that the sound may not be heard in the room.*

2.2 Cooling and heating performance (efficiencies / seasonal efficiencies)

Model	Cooling			Heating		
	EER	SEER	P Design (35ºC) (kW)	COP	SCOP	P Design (-10ºC) (kW)
RAS-4FSVNME	4.07	6.67	12.1	4.33	4.15	8.9
RAS-5FSVNME	4.29	6.64	14.0	4.48	4.40	11.0
RAS-6FSVNME	3.68	6.40	16.0	4.19	4.25	11.5
RAS-4FSNME	4.07	6.61	12.1	4.33	4.15	8.9
RAS-5FSNME	4.29	6.61	14.0	4.48	4.40	11.0
RAS-6FSNME	3.68	6.37	16.0	4.19	4.25	11.5
RAS-8FSXNME	3.60	7.59	22.5	4.70	5.62	18.3
RAS-10FSXNME	3.85	8.31	28.0	4.57	4.72	23.0
RAS-12FSXNME	3.58	8.26	33.5	4.10	4.66	24.8

2.3 Component data

2.3.1 FS(V)NME

MODEL		RAS-4FS(V)NME	RAS-5FS(V)NME	RAS-6FS(V)NME
Heat Exchanger				
Type		Multi-pass cross finned tube		
Tube material		Copper tube		
Outer diameter	mm	7.0	7.0	7.0
Rows		2	2	2.5
Number of tubes in the coil		66	99	99
Heat Exchanger Fin		Aluminium		
Pitch	mm	1.4	1.4	1.4
Maximum operating pressure	MPa	4.15	4.15	4.15
Total front area	m^2	2.82	2.82	2.82
Number of coils per unit		1	1	1
Outdoor fan				
Fan type		Large diameter fan (Propeller Fan)		
Fans per unit		2	2	2
Outer diameter	mm	544	544	544
Revolutions	rpm	852	852	852
Nominal air flow	m^3/min	140	140	140
Outdoor fan motor				
Type		Drip-proof type enclosure		
Starting method		Direct Current control		
Rated power	W	200 + 200	200 + 200	200 + 200
Quantity		2	2	2
Insulation class		E	E	E

2.3.2 FSXNME

MODEL		RAS-8FSXNME	RAS-10FSXNME	RAS-12FSXNME
Heat Exchanger				
Type		Multi-pass cross finned tube		
Tube material		Copper tube		
Outer diameter	mm	7.0	7.0	7.0
Rows		2	3	3
Number of tubes in the coil		80	118	118
Heat Exchanger Fin		Aluminium		
Pitch	mm	1.4	1.4	1.4
Maximum operating pressure	MPa	4.15	4.15	4.15
Total front area	m^2	1.86	1.83	1.83
Number of coils per unit		1 (2)	1 (2)	1 (2)
Outdoor fan				
Fan type		Large diameter fan (Propeller Fan)		
Fans per unit		2	2	2
Outer diameter	mm	544	544	544
Revolutions	rpm	920 + 750	1000 + 880	1000 + 880
Nominal air flow	m^3/min	175	195	195
Outdoor fan motor				
Type		Drip-proof type enclosure		
Starting method		Direct Current control		
Rated power	W	220 + 220	220 + 220	220 + 220
Quantity		2	2	2
Insulation class		E	E	E

2.4 Electrical data

2.4.1 General considerations

Key:

- U: power supply.
- PH: phase.
- f: frequency.
- RNC: running current.
- IPT: total input power.
- MC: maximum running current.
- Max. IPT: Maximum total input power.

NOTE

- *The specifications given in the following tables are subject to change without prior notice.*
- *The above performance data is based on 7.5m equivalent piping length and 0 m piping lift.*
- *The data is based on the nominal frequency range of the compressor with a combination at 100% of the capacity of the indoor units.*
- *This data is based on the same nominal capacity conditions for cooling and heating.*
- *The compressor is started up by an inverter, so the starting current is extremely low.*

2.4.2 Electrical data

Model	Mains power supply			Applicable voltage		Cooling		Heating		MC (A)	Max. IPT (kW)
	U (V)	PH	f (Hz)	Max. U (V)	Min. U (V)	RNC (A) (kW)	IPT (kW)	RNC (A) (kW)	IPT (kW)		
RAS-4FSVNME	230	1N~	50	207	253	14.4	2.97	13.9	2.89	28.5	5.9
RAS-5FSVNME						15.8	3.26	17.3	3.57	28.5	5.9
RAS-6FSVNME						21.0	4.35	20.8	4.3	28.5	5.9
RAS-4FSNME	400	3N~		360	440	5.0	2.97	4.9	2.89	16.0	6.9
RAS-5FSNME						5.5	3.26	6.1	3.57	16.0	6.9
RAS-6FSNME						7.4	4.35	7.3	4.30	16.0	6.9
RAS-8FSXNME						10.0	6.25	8.5	5.32	18.0	11.2
RAS-10FSXNME						11.7	7.27	11.1	6.89	19.0	11.8
RAS-12FSXNME						15.0	9.36	14.7	9.15	23.0	14.3

3. Capacities and selection data

Index

3.1 Procedure for selection of the system 26

3.1.1 SET FREE mini system posibilities 26

3.1.2 Check points for system installation 28

3.1.3 Selection procedure example 30

3.1.4 Selection procedure example with HYDRO FREE models 32

3.2 Indoor unit combinability 34

3.2.1 Important considerations 34

3.3 Correction factor depending on the pipe length 35

3.3.1 Cooling capacity correction factor depending on the pipe length 35

3.3.2 Heating capacity correction factor depending on the pipe length 37

3.4 Correction factor depending on defrost 38

3.5 Correction factor depending on the altitude 39

3.6 Capacity curves 39

3.7 Nominal capacity tables 41

3.7.1 FS(V)NME 41

3.7.2 FSXNME 42

3.1 Procedure for selection of the system

This section explains the procedure to select the most suitable outdoor and indoor unit system, with the values to be taken into account and the necessary steps to be carried out.

This procedure allows to select the unit with the best characteristics to provide the greatest level of efficiency and comfort, considering the building layout, the specifications of the indoor units to be installed and the distribution of air and refrigerant flows.

The ease of access for installation and maintenance work must be taken into account when selecting the location for installation of the outdoor unit.

To select the outdoor units, it will be necessary to consult and/or use a series of parameters shown in tables and graphics presented in the different chapters of this catalogue. A summarized list is shown below:

- For general data, see chapter *"1. General information"*.
- For cooling and heating capacities: *"3.7 Nominal capacity tables"*
- For correction factor depending on the piping length: *"3.3 Correction factor depending on the pipe length"*.
- For sensible heat factor: see the technical catalogue for indoor units and Complementary Systems
- In case of an installation with ducts (outdoor unit with RPI indoor unit) the fan performance for duct calculations should be considered. The RPI units are designed with different static pressure ranges in order to fulfill all installation necessities.

3.1.1 SET FREE mini system posibilities

The SET FREE mini boasts some unique features that must be taken into account before selecting the outdoor unit.

◆ Reduced total outdoor unit capacity

The SET FREE mini system allows the connection of a total combined indoor capacity as low as 50% and as high as 130% of the nominal capacity of the outdoor unit.

Example of reducing total outdoor unit capacity:

The diagram shows a typical building with a morning peak heat load on the east zone equivalent to a 6HP. In the afternoon a peak occurs on the west zone equivalent to a 7HP.

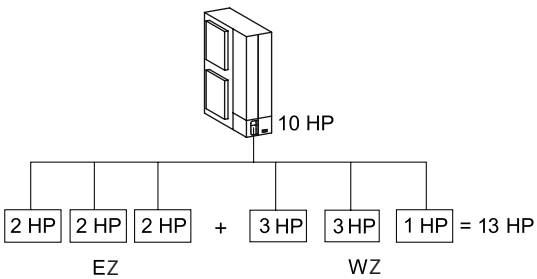

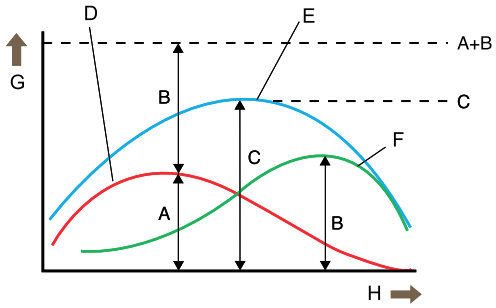

Indoor unit capacity
EZ: East zone (6 HP)
WZ: West zone (7 HP)

A: morning peak heat load in the eastern area
B: evening peak heat load in the western area
C: maximum simultaneous load for the entire building
D: eastern area load

E: total load
F: western area load
G: load
H: time

Therefore, a conventional system would require total installed plant of 6HP + 7HP = 13HP. The maximum simultaneous load on the whole building occurs at noon and is equal to 10HP of unit capacity. A SET FREE mini system of 10HP can be selected, and this capacity can be directed either to the east or west zone as dictated by the system controls.

NOTE

- *The maximum required loads of east and west zone must not be simultaneous.*
- *In systems in which all the indoor units are operated simultaneously, the total indoor capacity must not exceed the nominal capacity of the outdoor unit. Otherwise, poor performance or a narrowing of the operation range in overload conditions may occur.*

The ratio of total combined horsepower is calculated with the following formula:

Total combination horsepower= (Total indoor units horsepower / outdoor unit horsepower) x 100
= (13HP / 10HP) x 100 = **130%**

◆ Power adjustment on indoor units using the DSW

Depending on the actual installation requirements, it may be necessary to adjust the nominal capacity of the indoor units. This is achieved by adjusting a DSW located on the circuit board of the indoor units in the SYSTEM FREE range.

The adjustment of the nominal capacity of the indoor units in the SYSTEM FREE range can be performed at any moment, whereas during installation or commissioning of the system, or at any later time.

The following tables show the nominal capacity of the indoor units as well as the capacities obtained by DSW setting.

Nominal capacity of the indoor units:

Indoor units (HP)	0.4	0.6	0.8	1.0	1.5	2.0	2.5	3.0	4.0	5.0	6.0	8.0	10.0
Cooling (kW)	1.1	1.6	2.2	2.8	4.0	5.6	7.1	8.0	11.2	14.0	16.0	22.4	28.0
Heating (kW)	1.3	1.9	2.5	3.2	4.8	6.3	8.5	9.0	12.5	16.0	18.0	25.0	31.5

3

NOTE

The nominal cooling and heating capacity is based on EN14511.

Operating conditions		Cooling	Heating
Indoor air inlet temperature	DB	27.0 °C	20.0 °C
	WB	19.0 °C	—
Outdoor air inlet temperature	DB	35.0 °C	7.0 °C
	WB	—	6.0 °C

DB: dry bulb; WB: wet bulb.

Pipe length: 7.5 m; pipe height: 0 m

Adjusted capacities of indoor units:

Power (HP)	1.3			1.8			2.3		
Variable capacity	1.5	→	1.3	2.0	→	1.8	2.5	→	2.3
Cooling capacity (kW)	3.8			5.2			6.7		
Heating capacity (kW)	4.2			5.6			7.5		
Adjustment of DIP switch (DSW3)	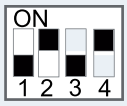 Standard	→	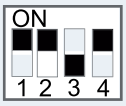 Lowered	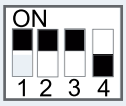 Standard	→	Lowered	Standard	→	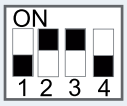 Lowered

3.1.2 Check points for system installation

For selecting the unit capacity, perform the system selection with checking the refrigerant concentration at leakage in order not to exceed the maximum permissible concentration.

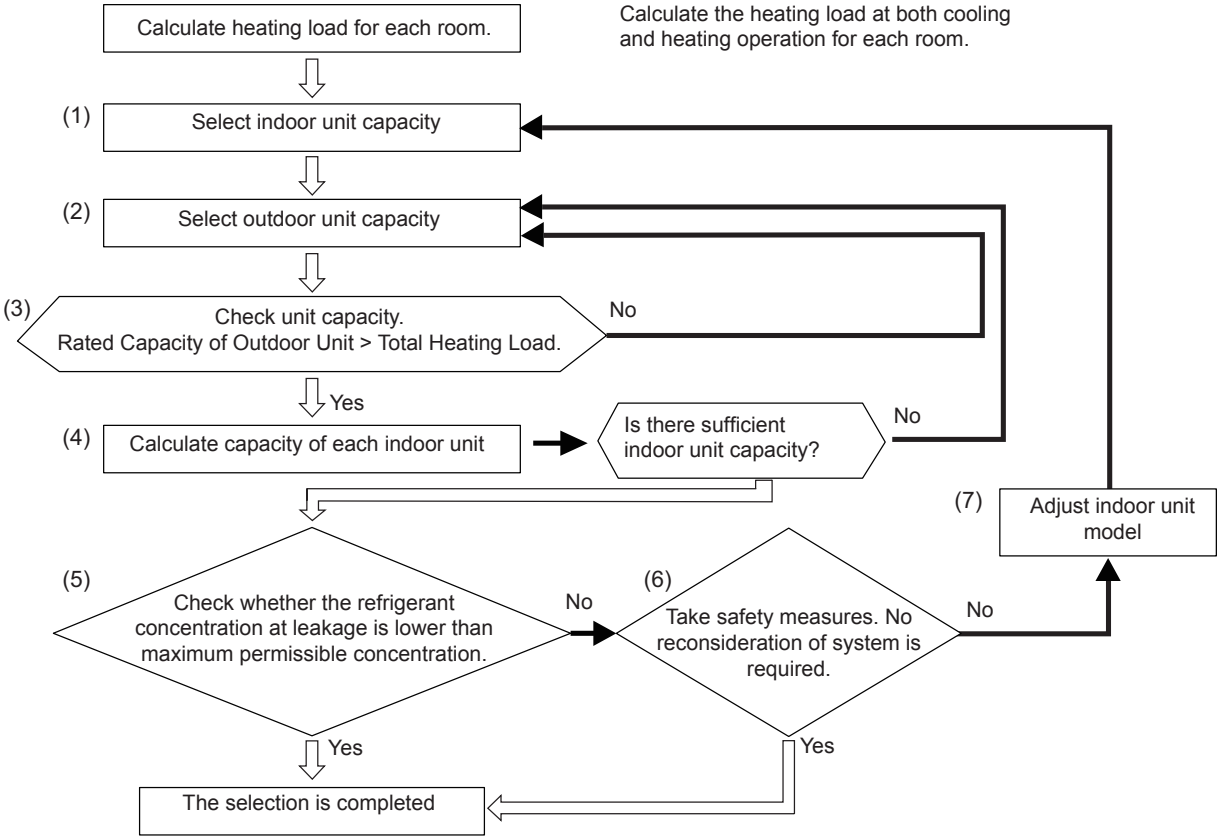

(1) Selecting indoor unit capacity

Set a tentative model of indoor unit for each room, making sure that its capacity complies with the following rule:

Nominal capacity of the indoor unit > Estimated load for the corresponding room

Then, sum up each the nominal capacity of all the indoor units (The calculation for both cooling and heating operation is required)

Total nominal capacity of the indoor units = Nominal capacity of each indoor unit

In case that the room temperature used to calculate the estimate load of the rooms differs from the rated temperatures for each operation mode (27 ºC DB / 19 ºC WB for cooling, 20 ºC DB for heating), it is advisable to carry out a rough calculation to check whether the capacity of the selected indoor units is sufficient.

Indoor unit capacity = Nominal capacity of each indoor unit x Correction factor (room temperature)

Correction factor according to room temperature: select the outdoor unit capacity at the estimated load from the “Cooling / Heating capacity tables”.

Correction Factor (room temperature) = OU capacity at estimated load at room temperature / Nominal outdoor unit capacity

(2) Selecting outdoor unit capacity.

Establish the desired connection ratio based on the total combined capacity of the indoor units and set a tentative outdoor unit capacity according to the total nominal capacity of the indoor units calculated in step (1).

Outdoor unit capacity at estimated load: Check the temperatures used for the estimation of load when calculating the capacity of the outdoor unit. In case that the room temperature or the outdoor air temperature are different from those used for the calculation of nominal capacity (room temperature: 27 ºC DB / 19 ºC WB for cooling, 20 ºC DB for heating; outdoor air temperature: 35 ºC DB for cooling, 7 ºC DB / 6 ºC WB for heating), then select the outdoor unit capacity at the estimated load (considering the room temperature and outdoor air temperature) from the “Cooling / Heating capacity tables”.

Then, calculate the maximum capacity of the outdoor unit considering the correction factors depending on piping length, height difference and altitude, as well as the defrosting correction factor (for heating operation).

The calculation for both cooling and heating operation is required.

Corrected OU capacity = OU capacity at estimated load x Correction factors (piping length and height difference, altitude correction factor, defrosting correction factor (for heating operation))

(3) Checking outdoor unit capacity.

Compare the outdoor unit capacity calculated in the item (2) with the capacity of total indoor units calculated in the item (1). The capacity of the whole system is the same as the smaller capacity.

Corrected Outdoor Unit capacity > Total thermal load (the total sum of the thermal load of all the rooms)

(4) Calculating each indoor unit capacity.

Recalculate the indoor unit capacity as follows. (The calculation is required for cooling and heating operation.)

Real indoor unit capacity for each room = Capacity of the system (obtained in step 2) × (Nominal capacity of the indoor unit / Total nominal capacity of the indoor units of the installed indoor units(obtained in step 2))

Confirm that the real indoor unit capacity for each room is sufficient to cover the thermal load required for the corresponding room:

Indoor Unit real capacity > Load for concerned room (*)

(*) Indoor unit real capacity is calculated with all indoor units working at full capacity. Maximum indoor unit capacity is up to nominal capacity when total load doesn't exceed outdoor unit capacity.

In case that outdoor unit capacity is either too small to cover the thermal load required for one or more of the rooms or too large to cover the thermal load required in each and all of the rooms, then recalculate it in step (2) after selecting an outdoor unit with increased or decreased capacity, as appropriate.

In case that is a significant lack or excess of capacity in a given room persists even after having recalculated outdoor unit requirements, it is advisable to select another indoor unit model for that room.

(5) Check refrigerant concentration.

Concentration refrigerant leakage < permissible refrigerant concentration

(6) Taking Safety Measure

- If it is correct, the selection is completed.
- Reconsideration of the system is required if the condition of both (5) and (6) are negative.

(7) Adjust outdoor unit model

- Start the process with the adjusted indoor unit capacity.

NOTE

- *Refer to "8.6 Precautions in the event of refrigerant leaks" for items from (5) through (7).*
- *When the temperature is set, consider that the ambient temperature increases by short circuit. Especially, if multiple outdoor units are installed or there is obstacle around the outdoor unit, pay attention to increase the ambient temperature.*
- *For the setting temperature at the heating operation in RPI, RCD and RCI indoor unit type, consider the temperature irregularity between the floor and the ceiling surface. The temperature around the ceiling surface normally becomes 2ºC higher than the floor surface during the heating operation.*
- *For selecting indoor unit capacity, if the sensible heating load is considered, consider the sensible heating ratio together.*
- *In the case that the total indoor unit capacity exceeds the outdoor unit capacity, the temperature is low or the piping length is long, if the indoor unit is operated simultaneously, the air outlet temperature decreases so that may be felt uncomfortably. Therefore, the facility should be designed that the cooling/heating capacity for indoor unit calculated from the cooling/heating capacity for system is more than the heating load.*

3.1.3 Selection procedure example

◆ Given conditions

It has been assumed an installation consisting of several rooms with different required cooling loads and temperature conditions.

Total load required for each room

Concept	East zone			West zone
	Room 1	Room 2	Room 3	Room 4
Estimated cooling load (kW)	3.40	4.5	4.90	5.40
Estimated heating load (kW)	3.80	5.10	5.30	6.10

Temperature condition

Operating conditions		Cooling	Heating
Indoor air inlet temperature	DB	28.0 °C	20.0 °C
	WB	19.0 °C	—
Outdoor air inlet temperature	DB	30.0 °C	5.0 °C
	WB	—	1.0 °C

DB: dry bulb; WB: wet bulb. In this example, the maximum required loads will not be simultaneous.

Piping dimensions:

- Equivalent pipe length between outdoor unit and indoor units: 50 m.
- Pipe height: 20 m.
- Cooling capacity correction factor depending on the pipe length: 0.92.
- Heating capacity correction factor depending on the pipe length: 0.96.
- Heat recovery system (3 pipes).

◆ Selection of indoor units and nominal capacity

Taking into account the given conditions mentioned above and the possibilities of the system, it has been adjusted the indoor unit capacities by DSW3.

Concept	Room 1	Room 2	Room 3	Room 4	1+2+3+4	Outdoor unit
Model selected	RPI-2.0 (Adjusted to 1.8)	RPI-2.5 (Adjusted to 2.3)	RPI-2.5	RPI-3.0	9.6 HP	RAS-8FSXNME (120%)
Nominal cooling load (kW)	5.2	6.7	7.1	8.0	27.0	24.08
Nominal heating load (kW)	5.6	7.5	8.5	9.0	30.6	25.01

The pre-selected capacity of the different indoor units has not been the immediately higher in order to apply a safety factor considering the different correction factors existing, which will reduce the capacity.

To determinate the nominal cooling and heating capacity, it's necessary refer to "Capacity tables (partial loads)", taking into account the temperature condition and the total horsepower combination (120%).

NOTE

- *If the air inlet temperature for the indoor unit or outdoor unit is not contained in the capacity tables, an interpolation should be carried out using the values above and below those of the air inlet temperature.*
- *If the total combination horsepower is not shown in the capacity tables (for example, 114%), an interpolation should be carried out using the values above and below (120% and 110%) those of the total combination.*

◆ Reduced total outdoor capacity

Then, it's shown a diagram of the installation resulting:

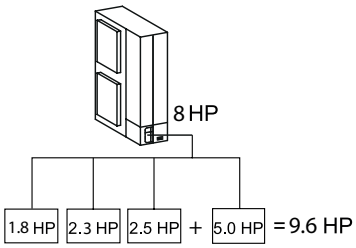

The possibility of reduced total outdoor unit capacity allows the 8HP outdoor unit model selection, less than the exact 9.6HP total indoor capacity.

Thus, the outdoor unit is allow to be up to 20% smaller than the total indoor unit capacity. Considering that the maximum simultaneous load on the installation must not be higher than 8HP.

Ratio total combined horsepower = (Total indoor unit horsepower / Outdoor unit horsepower) x 100 = (9.6HP / 8HP) x100 ≈ **120%**

◆ Actual capacity of the outdoor unit

Actual maximum capacity of the OU = (OU capacity at estimated load) x (correction factor according to pipe length x correction factor defrost (only for heating))

Cooling: (24.08 kW) x (0.92) = 22.15 kW.
Heating: (25.01 kW) x (0.96) x (0.90) = 21.60 kW.

See *"3.3 Correction factor depending on the pipe length"* and *"3.4 Correction factor depending on defrost"*

◆ Actual capacity of each indoor unit

Actual capacity of each indoor unit = (actual capacity of the outdoor unit) x (power value of each range of indoor units / sum of the power of each indoor unit)

RPI-2.0FSN5E (Adjusted to 1.8HP)

Cooling: 22.15 × (1.8 HP / (1.8 HP + 2.3 HP + 2.5 HP + 3.0 HP)) = 4.15 kW.
Heating: 21.60 × (1.8 HP / (1.8 HP + 2.3 HP +2.5 HP + 3.0 HP)) = 4.05 kW.

RPI-2.5FSN5E (Adjusted to 2.3HP)

Cooling: 22.15 × (2.3 HP / (1.8 HP + 2.3 HP + 2.5 HP + 3.0 HP)) = 5.30 kW.
Heating: 21.60× (2.3 HP / (1.8 HP + 2.3 HP + 2.5 HP + 3.0 HP)) = 5.17 kW.

RPI-2.5FSN5E

Cooling: 22.15 × (2.5 HP / (1.8 HP + 2.3 HP + 2.5 HP + 3.0 HP)) = 5.77 kW.
Heating: 21.60× (2.5 HP / (1.8 HP + 2.3 HP + 2.5 HP + 3.0 HP)) = 5.62 kW.

RPI-3.0FSN5E

Cooling: 22.15 × (3.0 HP / (1.8 HP + 2.3 HP + 2.5 HP + 3.0 HP)) = 6.92 kW.
Heating: 21.60 × (3.0 HP / (1.8 HP + 2.3 HP + 2.5 HP + 3.0 HP)) = 6.75 kW.

Results:

Concept	Room 1	Room 2	Room 3	Room 4	TOTAL
Model selected	RPI-2.0FSN5E (Adjusted to 1.8HP)	RPI-2.5FSN5E (Adjusted to 2.3HP)	RPI-2.5FSN5E	RPI-3.0FSN5E	Room 1+2+3+4
Actual cooling capacity (kW)	4.15	5.30	5.77	6.92	22.14
Actual heating capacity (kW)	4.05	5.17	5.62	6.75	21.59
Estimated cooling load (kW)	3.40	4.5	4.90	5.40	18.20
Estimated heating load (kW)	3.80	5.10	5.30	6.10	20.30

As can be seen, the actual total cooling and heating capacity are higher than the estimated total cooling and heating load. Therefore, it can be said that the RAS-8FSXNME unit meets the minimum cooling and heating requirements set for the system.

NOTE

If the actual total cooling / heating capacity calculated is lower than the estimated total cooling / heating load, the calculation must be done again with the unit immediately higher.

3.1.4 Selection procedure example with HYDRO FREE models

◆ Given conditions

Once considered the SET FREE system possibilities, it's the moment to start with the selection procedure. In order to do this, it has been assumed an installation consisting of several rooms with differents required cooling loads, temperature conditions and water temperature for energy recovery

Total load required for each room

Concept	Room 1	Room 2	Room 3	HYDRO FREE
Estimated cooling load (kW)	3.40	4.5	4.90	5.40
Estimated heating load (kW)	3.80	5.10	5.30	6.10

Temperature condition

Operating conditions		Cooling	Heating
Indoor air inlet temperature	DB	27.0 °C	20.0 °C
	WB	19.0 °C	—
Outdoor air inlet temperature	DB	30.0 °C	5.0 °C
	WB	—	1.0 °C

DB: dry bulb; WB: wet bulb.

In this example, the maximum required loads will not be simultanious.

Piping dimensions:

- Equivalent pipe length between outdoor unit and indoor units: 50 m.
- Pipe height: 20 m.
- Cooling capacity correction factor depending on the pipe length =0.92.
- Heating capacity correction factor depending on the pipe length =0.96.
- Heat recovery system (3 pipes).

◆ Selection of indoor units and nominal capacity

The pre-selected capacity of the different indoor units has not been the immediately higher in all the units, in order to apply a safety factor considering the different correction factors existing, which will reduce the capacity.

Concept	Room 1	Room 2	Room 3	HYDRO FREE	1+2+3+4	RAS-8FSXNME (120%)
Model selected	RPI-2.0 (Adjusted to 1.8)	RPI-2.5 (Adjusted to 2.3)	RPI-2.5	RWLT-3.0 VN1E	9.6 HP	
Nominal cooling load (kW)	5.2	6.7	7.1	8.0	27.0	24.08
Nominal heating load (kW)	5.6	7.5	8.5	9.0	30.6	25.01

Then, it's shown a diagram of the installation resulting:

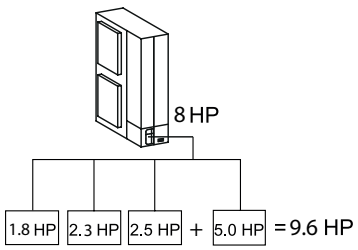

The possibility of reduced total outdoor unit capacity allows the 8HP outdoor unit model selection, less than the exact 9.6HP total indoor capacity.

Thus, the outdoor unit is allow to be up to 20% smaller than the total indoor unit capacity. Considering that the maximum simultaneous load on the installation must not be higher than 8HP.

Total combination horsepower = (Total indoor unit horsepower / Outdoor unit horsepower) x 100 = (9.6 HP / 8 HP) x100 ≈ **120%**

To determinate the nominal cooling and heating capacity, it's necessary refer to "Capacity tables (partial loads)", taking into account the temperature condition and the total horsepower combination (120%).

NOTE

- *If the air inlet temperature for the indoor unit or outdoor unit is not contained in the capacity tables, an interpolation should be carried out using the values above and below those of the air inlet temperature.*
- *If the total combination horsepower is not shown in the capacity tables (for example, 114%), an interpolation should be carried out using the values above and below (120% and 110%) those of the total combination*

◆ Actual capacity of the outdoor unit

Actual maximum capacity of the OU = (OU capacity at estimated load) x (correction factor according to pipe length x correction factor defrost (only for heating))

Cooling: (24.08 kW) x (0.92) = 22.15 kW.
Heating: (25.01 kW) x (0.96) x (0.90) = 21.60 kW.

See *"3.3 Correction factor depending on the pipe length"* and *"3.4 Correction factor depending on defrost"*

◆ Actual capacity of each indoor unit

Actual capacity of each indoor unit = (actual capacity of the outdoor unit) x (power value of each range of indoor units / sum of the power of each indoor unit)

RPI-2.0FSN5E (Adjusted to 1.8HP)

Cooling: 22.15 × (1.8 HP / (1.8 HP + 2.3 HP + 2.5 HP + 3.0 HP)) = 4.15 kW.
Heating: 21.60 × (1.8 HP / (1.8 HP + 2.3 HP +2.5 HP + 3.0 HP)) = 4.05 kW.

RPI-2.5FSN5E (Adjusted to 2.3HP)

Cooling: 22.15 × (2.3 HP / (1.8 HP + 2.3 HP + 2.5 HP + 3.0 HP)) = 5.30 kW.
Heating: 21.60× (2.3 HP / (1.8 HP + 2.3 HP + 2.5 HP + 3.0 HP)) = 5.17 kW.

RPI-2.5FSN5E

Cooling: 22.15 × (2.5 HP / (1.8 HP + 2.3 HP + 2.5 HP + 3.0 HP)) = 5.77 kW.
Heating: 21.60× (2.5 HP / (1.8 HP + 2.3 HP + 2.5 HP + 3.0 HP)) = 5.62 kW.

RWLT-3.0 VN1E

Cooling: 22.15 × (3.0 HP / (1.8 HP + 2.3 HP + 2.5 HP + 3.0 HP)) = 6.92 kW.
Heating: 21.60 × (3.0 HP / (1.8 HP + 2.3 HP + 2.5 HP + 3.0 HP)) = 6.75 kW.

Available capacity for HYDRO FREE

Cooling: 22.15 – 4.15 – 5.30 – 5.77 = 6.93 kW.
Heating: 21.60 – 4.05 – 5.17 – 5.62 = 6.76 kW

Concept	Room 1	Room 2	Room 3	HYDRO FREE	TOTAL
Model selected	RPI-2.0FSN5E (Adjusted to 1.8HP)	RPI-2.5FSN5E (Adjusted to 2.3HP)	RPI-2.5FSN5E	Available capacity	Room 1+2+3+4
Actual cooling capacity (kW)	4.15	5.30	5.77	6.93	22.15
Actual heating capacity (kW)	4.05	5.17	5.62	6.76	21.6
Estimated cooling load (kW)	3.40	4.5	4.90	5.40	18.20
Estimated heating load (kW)	3.80	5.10	5.30	6.10	20.30

RWLT-3.0VN1E capacity confirmation

Cooling: Max. 8.00 kW > Available 6.93 kW > Load 5.40 kW

Heating: Max. 9.00 kW > Available 6.76 kW > Load 6.10 kW.

Conclusion:

The results of the calculation are the nearest to the requirements of the installation, and therefore the selection of units is considered to be optimal.

3.2 Indoor unit combinability

Outdoor unit	Indoor unit				
	Minimum combination capacity (HP)	Maximum combination capacity (HP)	Combination quantity	Min. individual operation capacity (HP)	Range of combination capacity
RAS-4FS(V)NME	2.0	5.2	13 (6)	0.4	50% to 130%
RAS-5FS(V)NME	2.5	6.5	16 (7)		
RAS-6FS(V)NME	3.0	7.8	18 (8)		
RAS-8FSXNME	4.0	10.4	26 (8)		
RAS-10FSXNME	5.0	13.0	32 (10)		
RAS-12FSXNME	6.0	15.6	39 (10)		

NOTE

- *In brackets the recommended maximum number of combined indoor units. This number must not be exceed if the piping length exceeds any of the pipe working conditions.*

3.2.1 Important considerations

1 The connectible indoor unit capacity ratio can be calculated as follows:

Connectible Indoor Unit Capacity Ratio = Total indoor unit capacity / Total outdoor unit capacity.

2 The maximum number of connectible indoor units differs depending on the model, capacity, environment and its installation place:

a. Simultaneous operation of indoor units in the same operation mode is only possible up to a capacity ratio of 100%. If this combination ratio is exceeded, up to the respective maximum of 130%, capacity loss may occur and it may cause a decrease of operating performance and operating limit in overload operation.

b. For systems which all the indoor units not operate simultaneously, the total indoor unit capacity is available up to 130% against the outdoor unit capacity.

c. Since the load capacity per hour or the possibility to operate all indoor units simultaneously is unknown at the design stage, the total combined capacity of the indoor units should not exceed 100% of the outdoor unit capacity.

d. It is not encouraged to exceed the recommended number of connected units in cold regions (places where outdoor air temperature may fall below -10ºC) and the total indoor unit capacity should be less than 100% against the outdoor unit capacity. Otherwise, it may occur that the discharge temperature of a part of the indoor units becomes extremely low, or that indoor units do not operate for a long period of time upon start up.

e. System configurations exceeding a combination ratio of 130% are not acceptable. The may cause activation of alarms and operation failure.

3 For connecting Wall Type RPK with the Expansion Valve Kit, the number of connectible indoor unit is limited according to the total piping length between the expansion valve and the indoor unit. The total piping length must be less than the length recommended. HITACHI will accept no responsibility for units that have been charged with nonspecified refrigerant once. For further information please refer to the corresponding technical documentation for RPK and expansion valve kit EV-1.5N1.

4 The refrigerant R410A is non-flammable and non-toxic. However, if leakage occurs and gas fills a room, it may cause suffocation. The maximum permissible concentration of R410A in air is 0.44 kg/m3, according to the refrigeration and air conditioning facility standard (EN378-1). Therefore, some effective measure must be taken to lower the R410A concentration in air below 0.44 kg/m3, in case of leakage. If the condition is not satisfied, it is required that the safety measure is added and the system is changed.

3.3 Correction factor depending on the pipe length

3.3.1 Cooling capacity correction factor depending on the pipe length

The cooling capacity must be corrected according to the following formula:

CCA = CC x F
CCA: Current corrected cooling capacity.
CC: Cooling capacity (value obtained in *"12.1 Cooling capacity tables according to total power of combined indoor units"*).
F: correction factor depending on the equivalent pipe length.

The correction factors are shown in the following figure:

A: Outdoor unit.

B: Indoor unit.

L: Current length of a single pipe between the indoor unit and the outdoor unit, in meters.

EL: total equivalent distance between the indoor unit and outdoor unit, in meters (equivalent to the length of a single pipe).

Equivalent pipe length for:

- 90° union elbow: 0.5 m.
- 180° curve: 1.5 m.
- One multi-kit: 0.5 m.

H: vertical distance between indoor unit and outdoor unit, in meters.

H > 0: position of the outdoor unit higher than the indoor unit.

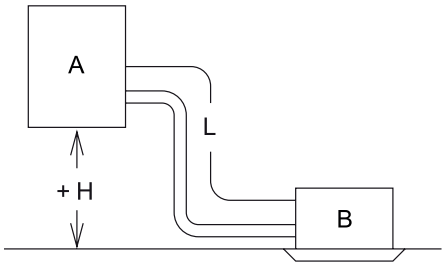

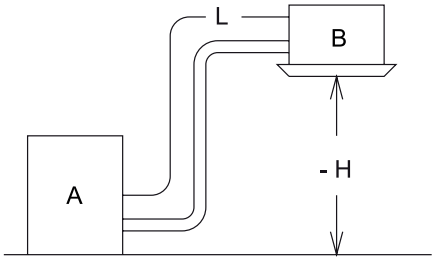

◆ **RAS-4FS(V)NME**

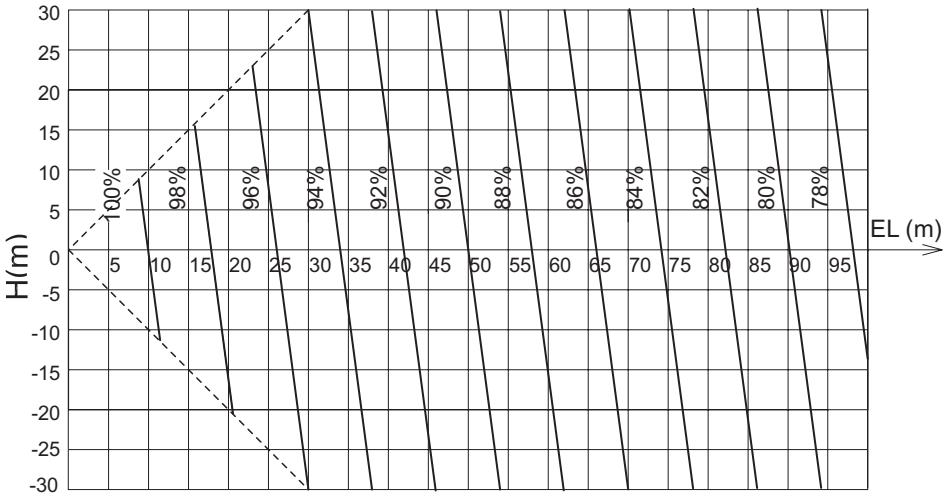

——— :All indoors units at cooling operation

◆ RAS-(5-6)FS(V)NME

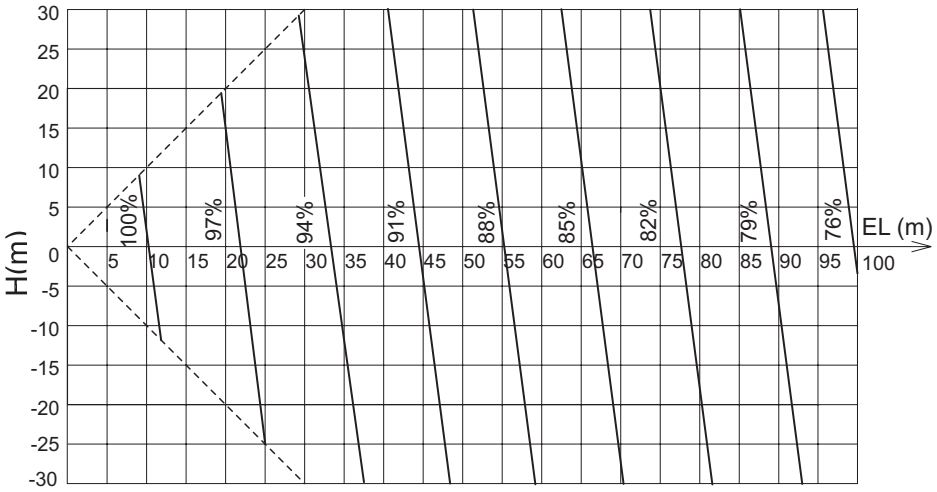

——— :All indoors units at cooling operation

◆ RAS-(8-12)FSXNME

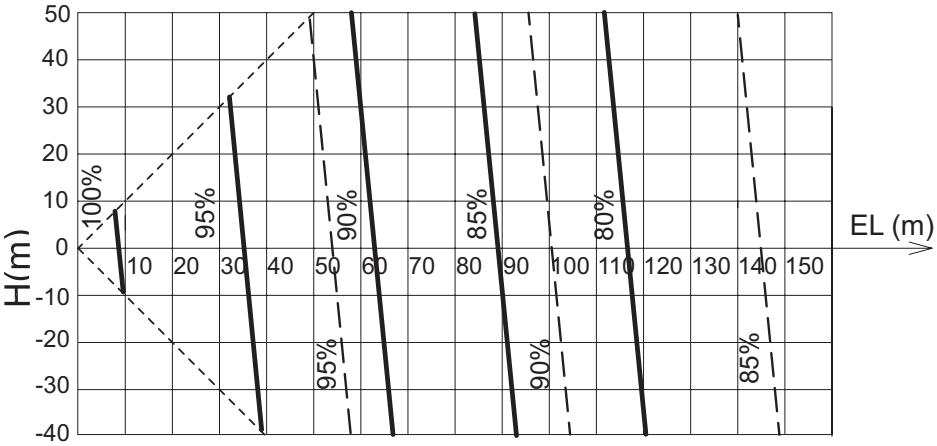

——— :All indoors units at cooling / heating operation

— — :All indoors units at cooling operation

NOTE

In Heat Recovery systems (3 pipes), the dotted line for the cooling capacity correction factor indicates that all the indoor units function in cooling mode. Even if one of the indoor units functions in heating mode, the value shall be indicated by the continuous line

3.3.2 Heating capacity correction factor depending on the pipe length

The heating capacity must be corrected according to the following formula:

HCA = HC x F
HCA: Current corrected heating capacity.
HC: Heating capacity (value obtained in chapter *"12.2 Heating capacity tables according to total power of combined indoor units"*)
F: correction factor depending on the equivalent pipe length.

The correction factors are shown in the following figure:

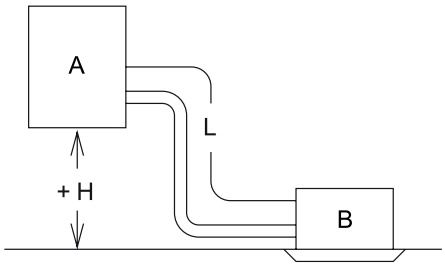

A: Outdoor unit.

B: Indoor unit.

L: Current length of a single pipe between the indoor unit and the outdoor unit, in meters.

EL: total equivalent distance between the indoor unit and outdoor unit, in meters (equivalent to the length of a single pipe).

Equivalent pipe length for:

90° union elbow: 0.5 m.

180° curve: 1.5 m.

One Multi-kit: 0.5 m.

H: vertical distance between indoor unit and outdoor unit, in meters.

EL: total equivalent distance between the indoor unit and outdoor unit, in meters (equivalent to the length of a single pipe).

H > 0: position of the outdoor unit higher than the indoor unit.

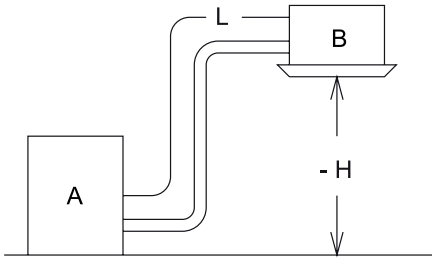

◆ **RAS-4FS(V)NME**

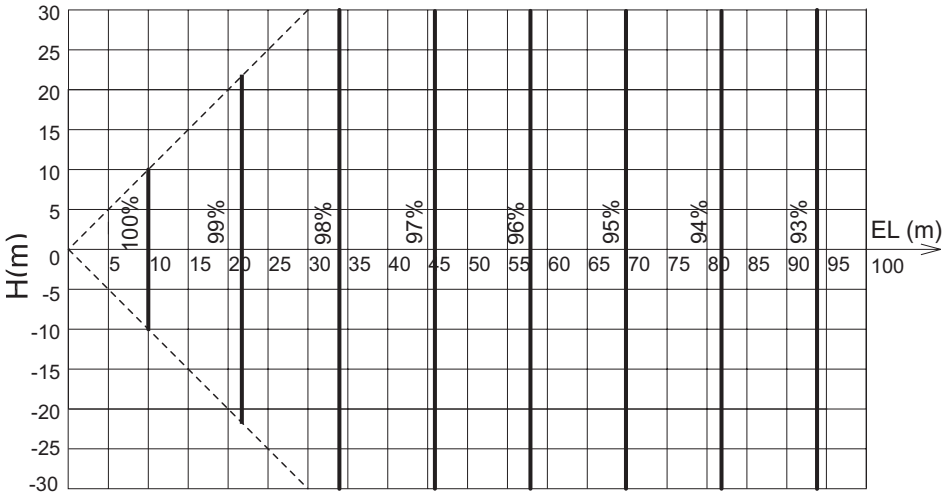

——— :All indoors units at heating operation

◆ **RAS-(5-6)FS(V)NME**

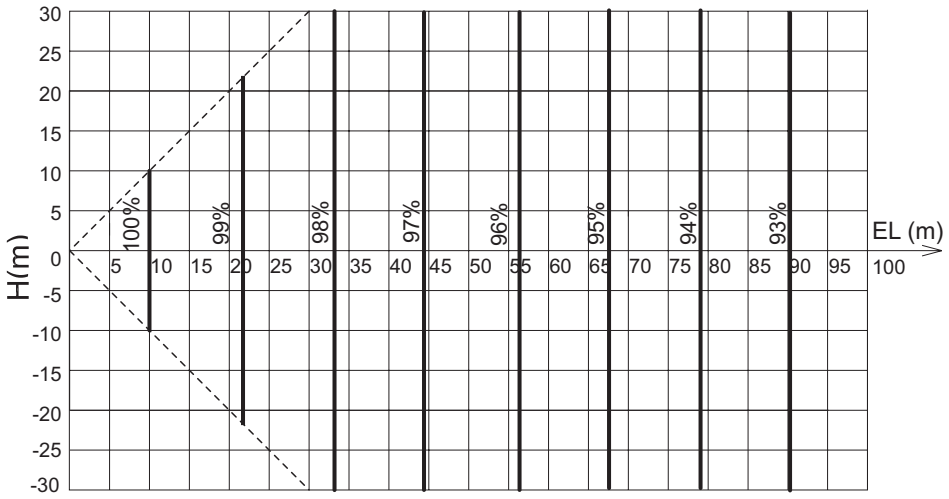

——— :All indoors units at heating operation

◆ **RAS-(8-12)FSXNME**

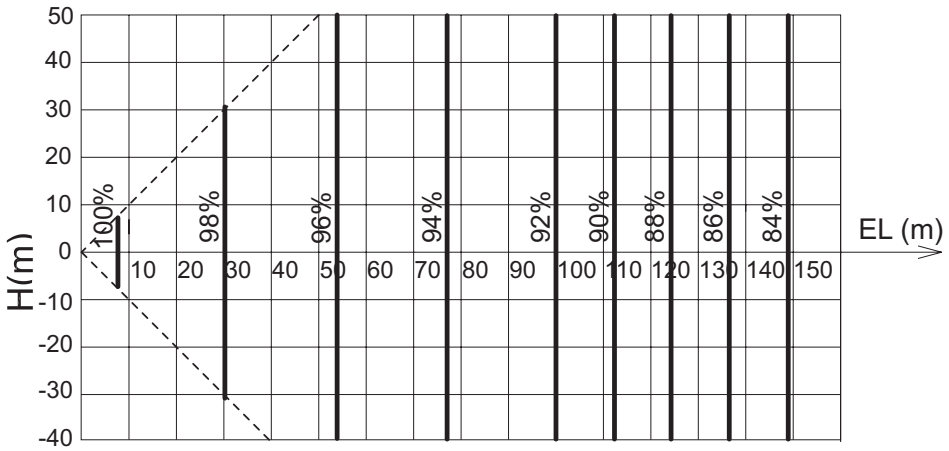

——— :All indoors units at cooling / heating operation

— —:All indoors units at heating operation

3.4 Correction factor depending on defrost

The heating capacity described in the preceding section excludes running in periods of frost or defrost operation.

In reference to running in frost or defrost operation, the heating capacity is corrected with the following equation:

Corrected heating capacity = (correction factor) x (heating capacity)

Inlet air temperature in the outdoor heat exchanger (°C DB) (Humidity = 85% RH)	-7	-5	-3	0	3	5	7
Correction factor	0.95	0.93	0.88	0.85	0.87	0.90	1.0

NOTE

- *DB: dry bulb.*
- *The correction factor in defrost function is not applicable in special conditions, such as snowfall or operation during transient periods.*

3.5 Correction factor depending on the altitude

This capacity is impacted by the altitude.

Altitude	m	0	300	600	900	1200	1500	1800	2000
Correction factor		1.00	0.97	0.93	0.90	0.87	0.84	0.81	0.81

Altitude	m	2100	2400	2700	3000	3300	3600	3900	4000
Correction factor		0.78	0.75	0.72	0.70	0.67	0.64	0.62	0.61

3.6 Capacity curves

◆ Cooling capacity

Temperature conditions	
Inlet air temperature in the indoor	27°C DB
	19°C WB
Inlet air temperature in the outdoor	35°C DB

DB: dry bulb; WB: wet bulb.

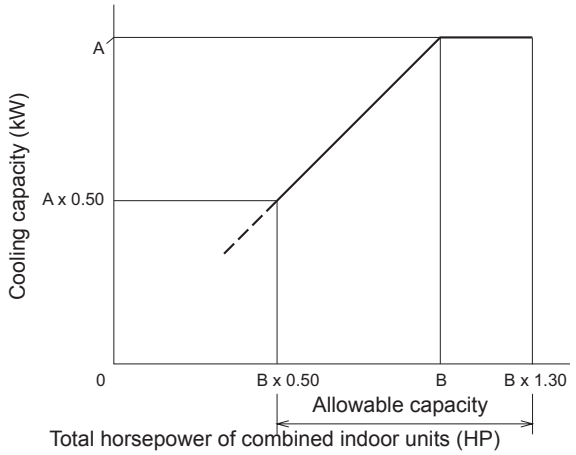

Model	A (kW)	B (HP)
RAS-4FS(V)NSE	12.10	4
RAS-5FS(V)NSE	14.0	5
RAS-6FS(V)NSE	16.0	6

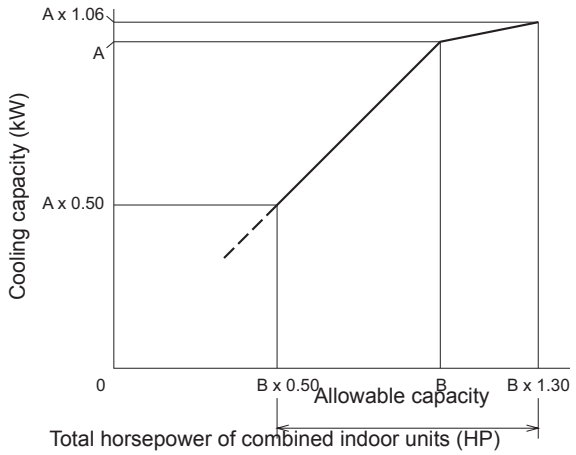

Model	A (kW)	B (HP)
RAS-8FSXNME	22.4	8
RAS-10FSXNME	28.0	10
RAS-12FSXNME	33.5	12

◆ Heating capacity

Temperature conditions	
Inlet air temperature in the indoor	20 °C DB
Inlet air temperature in the outdoor	6 °C WB
	7 °C DB

DB: dry bulb; WB: wet bulb.

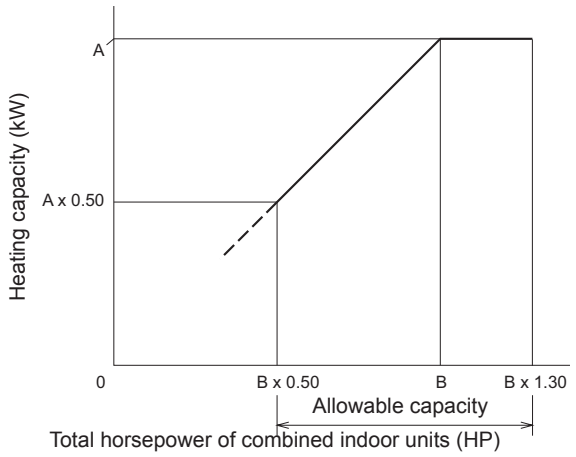

Model	A (kW)	B (HP)
RAS-4FS(V)NSE	12.5	4
RAS-5FS(V)NSE	16.0	5
RAS-6FS(V)NSE	18.0	6

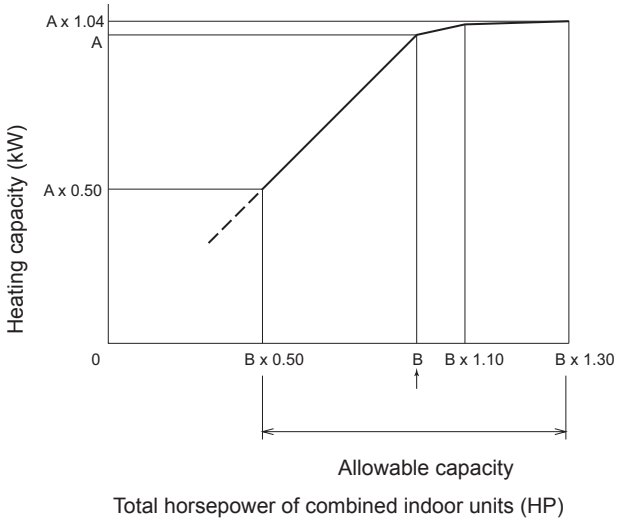

Model	A (kW)	B (HP)
RAS-8FSXNME	25.0	8
RAS-10FSXNME	31.5	10
RAS-12FSXNME	37.5	12

3.7 Nominal capacity tables

3.7.1 FS(V)NME

◆ **Cooling capacity**

	Outdoor units HP					
	RAS-4FS(V)NME		RAS-5FS(V)NME		RAS-6FS(V)NME	
Total horsepower of combined indoor units	Cooling capacity (kW)	Cooling input (kW)	Cooling capacity (kW)	Cooling input (kW)	Cooling capacity (kW)	Cooling input (kW)
50%	6.05	1.40	7.00	1.53	8.00	2.04
60%	7.26	1.69	8.40	1.86	9.60	2.48
70%	8.47	1.96	9.80	2.15	11.20	2.87
80%	9.68	2.29	11.20	2.51	12.80	3.35
90%	10.89	2.62	12.60	2.87	14.40	3.83
100%	12.10	2.97	14.00	3.26	16.00	4.35
110%	12.10	3.03	14.00	3.33	16.00	4.43
120%	12.10	3.06	14.00	3.36	16.00	4.48
130%	12.10	3.12	14.00	3.43	16.00	4.57

◆ **Heating capacity**

	Outdoor units HP					
	RAS-4FS(V)NME		RAS-5FS(V)NME		RAS-6FS(V)NME	
Total horsepower of combined indoor units	Heating capacity (kW)	Heating input (kW)	Heating capacity (kW)	Heating input (kW)	Heating capacity (kW)	Heating input (kW)
50%	6.25	1.36	8.00	1.68	9.00	2.02
60%	7.50	1.65	9.60	2.04	10.80	2.45
70%	8.75	1.91	11.20	2.36	12.60	2.84
80%	10.00	2.22	12.80	2.75	14.40	3.31
90%	11.25	2.51	14.40	3.11	16.20	3.74
100%	12.50	2.89	16.00	3.57	18.00	4.30
110%	12.50	2.89	16.00	3.57	18.00	4.30
120%	12.50	2.83	16.00	3.50	18.00	4.21
130%	12.50	2.74	16.00	3.39	18.00	4.08

3.7.2 FSXNME

◆ Cooling capacity

	Outdoor units HP					
	RAS-8FSXNSE		RAS-10FSXNSE		RAS-12FSXNSE	
Total horsepower of combined indoor units	Cooling capacity (kW)	Cooling input (kW)	Cooling capacity (kW)	Cooling input (kW)	Cooling capacity (kW)	Cooling input (kW)
50%	11.20	2.27	14.00	2.91	16.75	3.74
60%	13.44	2.88	16.80	3.69	20.10	4.77
70%	15.68	3.53	19.60	4.52	23.45	5.80
80%	17.92	4.21	22.40	5.39	26.80	6.92
90%	20.16	4.92	25.20	6.30	30.15	8.13
100%	22.40	5.68	28.00	7.27	33.50	9.35
110%	23.30	5.96	29.12	7.64	34.84	9.82
120%	23.52	6.02	29.40	7.71	35.18	9.91
130%	23.74	6.08	29.68	7.78	35.51	10.00

◆ Heating capacity

	Outdoor units HP					
	RAS-8FSXNSE		RAS-10FSXNSE		RAS-12FSXNSE	
Total horsepower of combined indoor units	Heating capacity (kW)	Heating input (kW)	Heating capacity (kW)	Heating input (kW)	Heating capacity (kW)	Heating input (kW)
50%	12.50	2.47	15.75	3.24	18.75	4.30
60%	15.00	3.00	18.90	3.93	22.50	5.22
70%	17.50	3.47	22.05	4.55	26.25	5.92
80%	20.00	4.05	25.20	5.31	30.00	6.69
90%	22.50	4.58	28.35	5.99	33.75	7.96
100%	25.00	5.26	31.50	6.89	37.50	9.15
110%	25.75	5.26	32.45	6.89	38.63	9.15
120%	25.88	5.15	32.60	6.75	38.81	8.97
130%	26.00	5.00	32.76	6.55	39.00	8.69

4. Acoustic characteristics curves

Index

4.1 Overall sound level 44

4.2 Sound pressure of RAS-(4-6)FS(V)NME outdoor units 45

4.3 Sound pressure of RAS-(8-12)FSXNME outdoor units 46

4.4 Sound pressure of CH-Box (Only for heat recovery system) 47

4.1 Overall sound level

1 The sound pressure level was measured under the following conditions:

a. 1 m from the surface of the unit's service cover and 1.5 m from floor level.

b. The provided data corresponds to cooling mode. In the case of heating mode, the sound pressure level increases from 1 to 2 dB(A).

c. The provide data has been measured in an anechoic chamber, so the reflected sound must be taken into account for installation.

2 Sound power levels were measured in a reverberant room, in accordance with the EN12102 standard. Used environment conditions are the same as specified in EN14511 for performance test.

Overall sound level measuring positions

RAS-(4-6)FS(V)NME RAS-(8-12)FSXNME
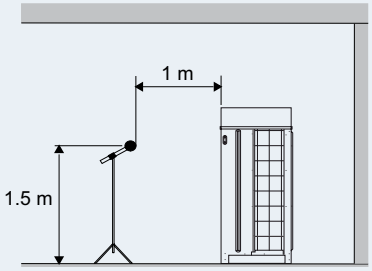

4.2 Sound pressure of RAS-(4-6)FS(V)NME outdoor units

RAS-4FS(V)NME

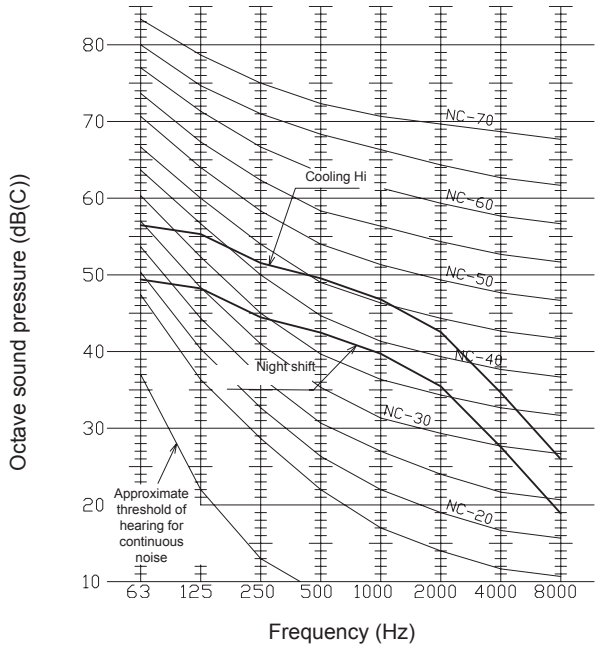

Sound pressure level: Global (night mode); 52 (45) dB(A)

RAS-5FS(V)NME

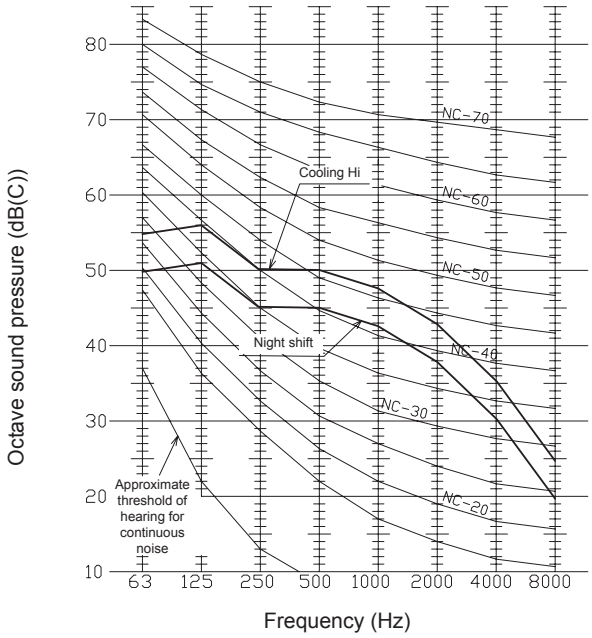

Sound pressure level: Global (night mode); 52 (47) dB(A)

RAS-6FS(V)NME

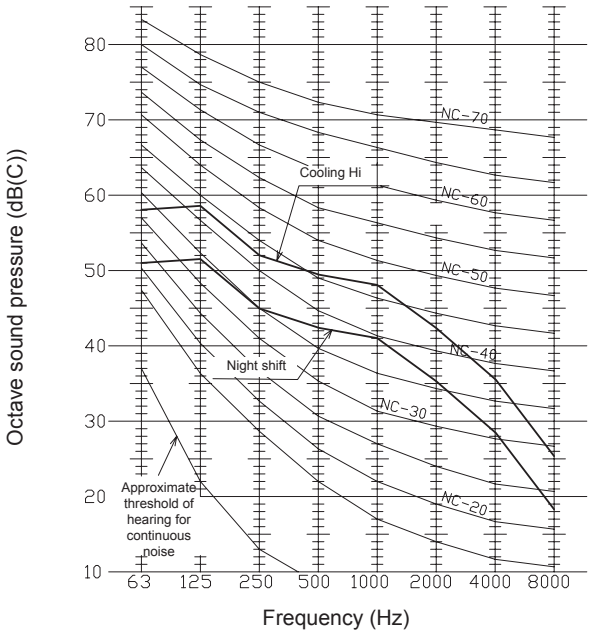

Sound pressure level: Global (night mode); 53 (48) dB(A)

4.3 Sound pressure of RAS-(8-12)FSXNME outdoor units

RAS-8FSXNME

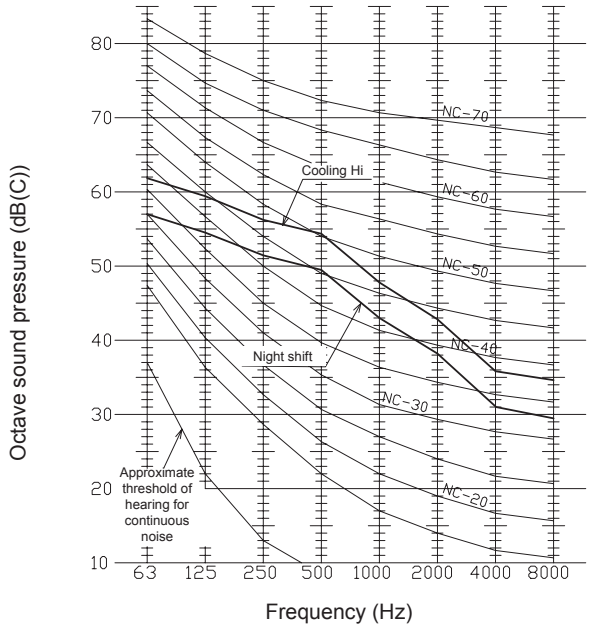

Sound pressure level: Global (night mode); 55 (54.9) dB(A)

RAS-10FSXNME

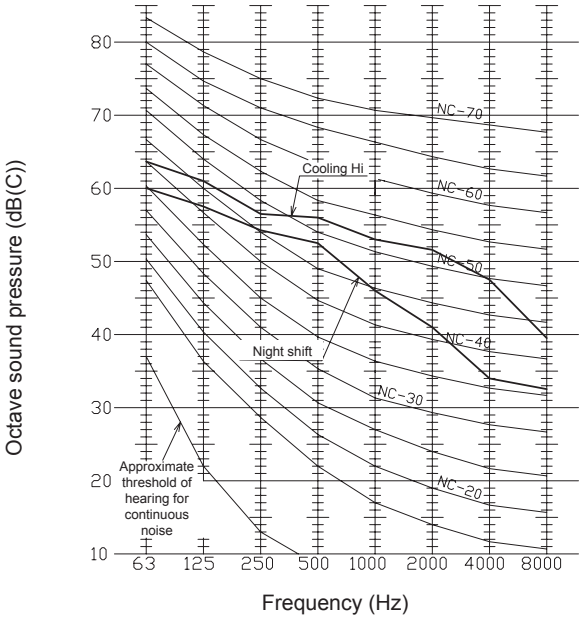

Sound pressure level: Global (night mode); 58.7 (53) dB(A)

RAS-12FSXNME

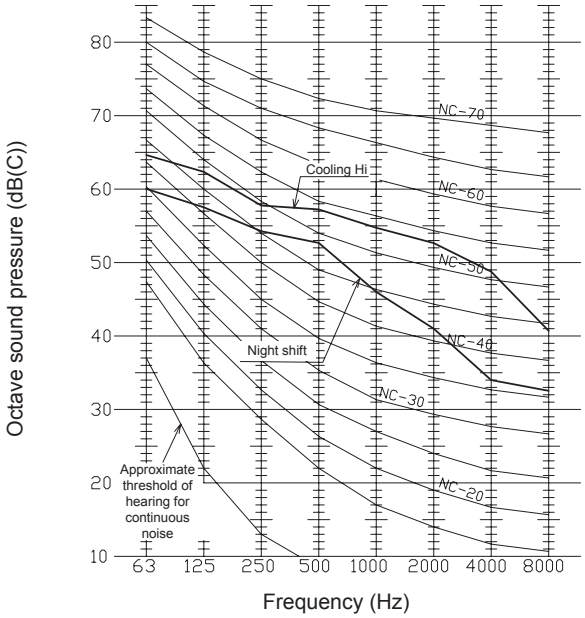

Sound pressure level: Global (night mode); 60.2 (53) dB(A)

4.4 Sound pressure of CH-Box (Only for heat recovery system)

1 The readings were taken in an anechoic chamber. Operation sound in actual conditions may become larger due to ambient noise or echo from the surroundings. Noise sources must be taken into consideration when looking for a proper installation location.

2 CH-Box operation sound may be heard even if the indoor unit has stopped, while the outdoor units are in operation and the other indoor units are in thermo-ON.

3 “Operation Sound” stands for the CH-Box operation sound when the entire system is either in cooling operation or in heating operation (Not in simultaneous cooling and heating operation).

4 “Maximum Sound” is the maximum value of CH-Box operation sound while the unit is in simultaneous cooling and heating operation or in defrosting operation.

5 “Maximum Sound” may be exceeded during transient operation such as switching to defrosting mode. This must be taken into account when selecting the place installation. The CH-Box should not be installed in places near bedrooms or hospital rooms. (Refer to the Installation Manual for details)

CH-AP160SSX	CH-AP280SSX

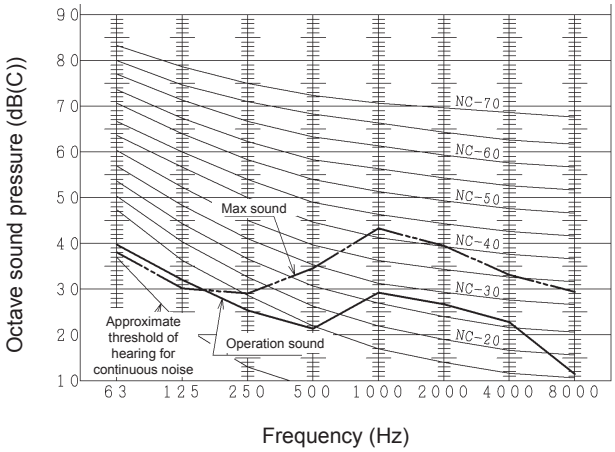

Sound pressure level: Operation sound (max sound); 33 (46) dB(A)

CH-AP04MSSX	CH-AP08MSSX

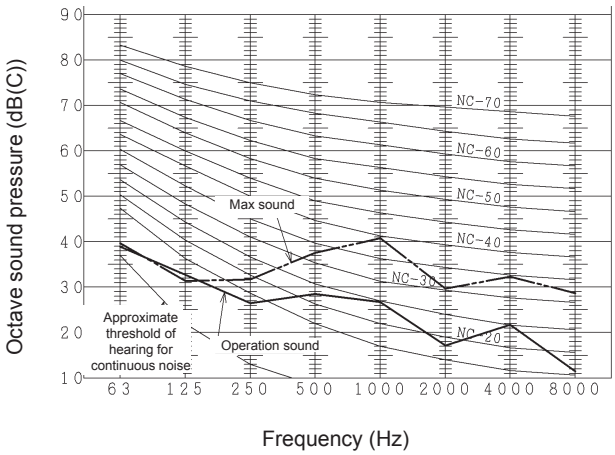

Sound pressure level: Operation sound(max sound); 31(43) dB(A)

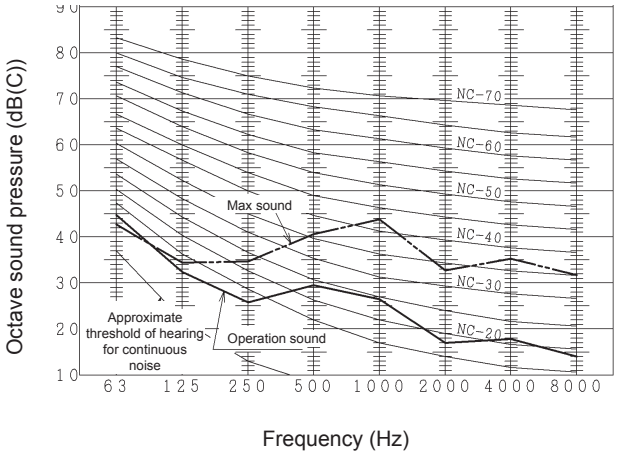

Sound pressure level: Operation sound (max sound); 31(46) dB(A)

CH-AP12MSSX	CH-AP16MSSX
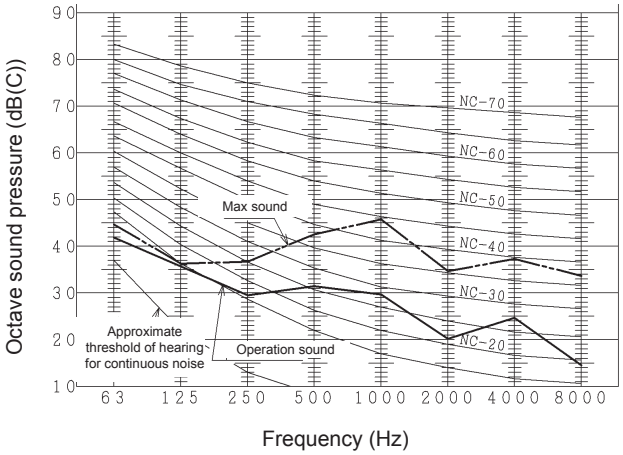	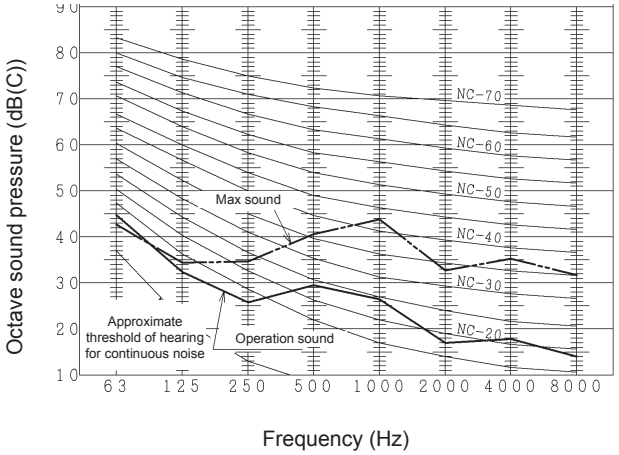
Frequency (Hz)	Frequency (Hz)
Sound pressure level: Operation sound (max sound); 34(48) dB(A)	Sound pressure level: Operation sound (max sound); 34(49) dB(A)

5. Working range

Index

5.1 Voltage supply 50

5.2 Working range 50

5.1 Voltage supply

Service voltage

Between 90 and 110% of the rated voltage.

Start-up voltage

Between 85 and 115% of the rated voltage.

Voltage imbalance

Up to 3% in each phase, measured at the main terminal of the outdoor unit.

5.2 Working range

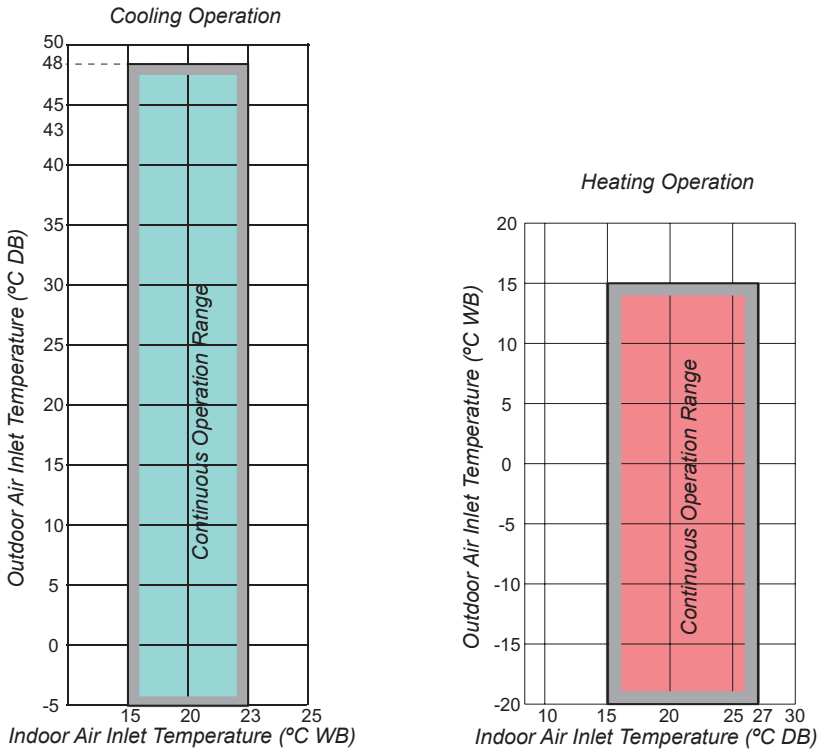

Operation		Cooling	Heating
Indoor temperature	Min.	21 °C DB / 15 °C WB	15 °C DB
	Max.	32 °C DB / 23 °C WB	27 °C DB
Outdoor temperature	Min.	-5 °C DB	-20 ºC DB / -20 °C WB
	Max.	48 °C DB	21 ºC DB / 15 °C WB

Cooling operation under low ambient temperatures down to -5 °C allows to work, even in winter, in buildings with high internal heat gains due to lighting, people and machinery, particularly in spaces such as shops, lecture rooms, data processing areas, etc. For heating operation the range extends down to -20 °C.

This working range is for “Air to Air” systems. For HYDRO FREE “Air to Water” systems follow the working range indicated in the corresponding HYDRO FREE technical documentation.

NOTE

- *DB: dry bulb; WB: wet bulb.*
  - *If install the units to the place where exceed ambient temperature 43°C continuously, the combination ratio must be lower 130% and not to operate all of the indoor unit simultaneously.*
  - *The cooling capacity is deteriorated at high ambient temperature. Select the larger capacity outdoor unit than compatible building heat load.*
  - *The appropriate amount (100%) of refrigerant must be charged. Excessive charging of refrigerant is forbidden.*
  - *It must be avoided to install the units where affected by direct sunlight reflection and short circuit. There may be the possibility to activate protection control and alarm system if install the units to inappropriate place. Also the life time of the products and parts must be considerably shortened.*
  - *Periodic maintenance (1/certain month) must be applied to the heat exchanger fin to avoid adhesion of dirt and clogging of sand to the outdoor unit heat exchanger.*
- *There might be the possibility of thermo-OFF when cooling load is low and outdoor air inlet temperature is 10°C DB or lower to prevent frost formation on indoor unit heat exchanger.*
- *It is assumed that an indoor air inlet temperature lower than 15 ºC in heating operation is given for a limited period during transitional operation (such as during startup), and is not suitable for continuous operation during a long time.*
- *There might be the possibility of thermo-OFF when heating load is low and outdoor air inlet temperature is high (higher than 15°C DB) to prevent the outdoor unit. The outdoor unit operation stops at when outdoor air inlet temperature exceed 27°C DB.*

HITACHI

6. General dimensions

Index

6.1 RAS-(4-6)FS(V)NME dimensions 54

6.2 RAS-(8-12)FSXNME dimensions 55

6.3 CH-Box dimensions 56

6.4 Clearance conditions 59

6.5 Service space 62

6.5.1 Service space for RAS-(4-6)FS(V)NME and RAS-(8-12)FSXNME 62

6.5.2 Service space for CH-Box 62

6.1 RAS-(4-6)FS(V)NME dimensions

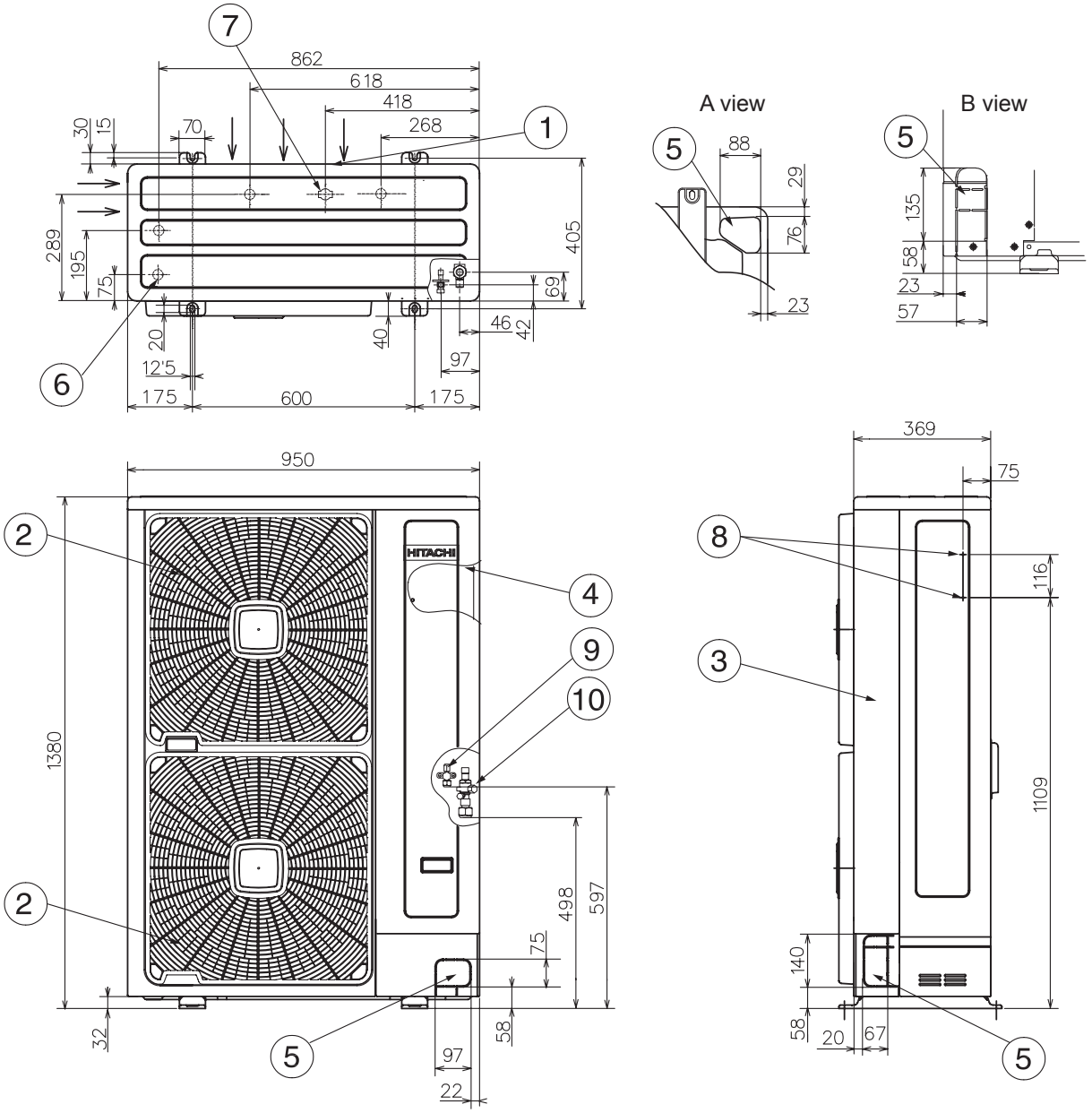

Nº	Part		Nº	Part	
1	Air Inlet	→	6	Drain holes	4-ø24
2	Air Outlet		7	Drain holes (connexion for DBS-26)	1-ø26
3	Service Cover		8	Holes for fixing machine to wall	2-M5
4	Electrical Switch Box		9	Refrigerant liquid pipe	ø9.52
5	Holes for refrigerant piping and electrical wiring piping		10	Refrigerant gas pipe	ø15.88

All dimensions in mm.

6.2 RAS-(8-12)FSXNME dimensions

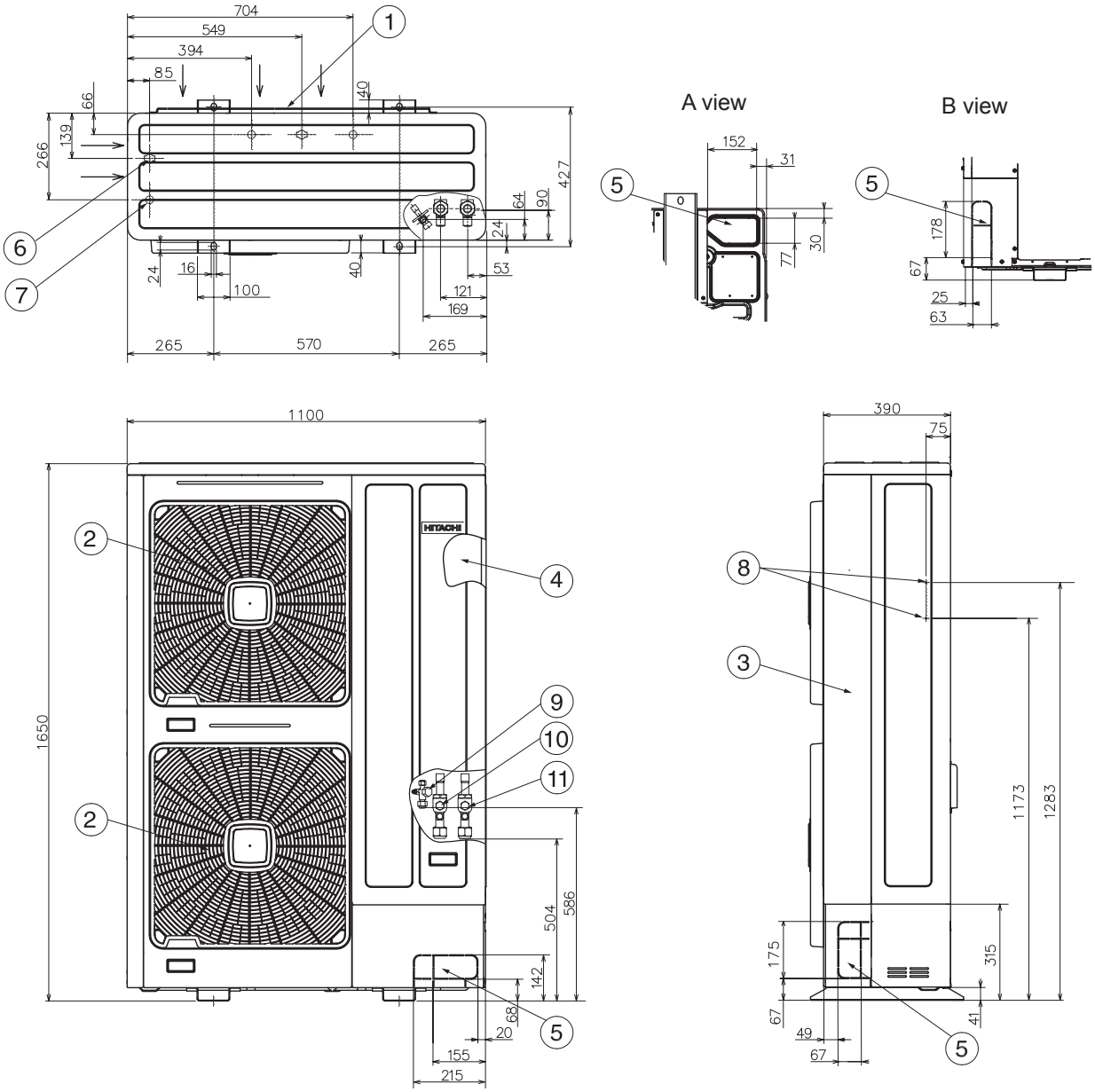

Nº	Part	Remarks	Nº	Part	Remarks
1	Air Inlet	→	6	Drain holes	4-ø24
2	Air Outlet		7	Drain holes (connexion for DBS-26)	1-ø26
3	Service Cover		8	Holes for fixing machine to wall	2-M5
4	Electrical Switch Box		9	Refrigerant liquid pipe	øa
5	Holes for refrigerant piping and electrical wiring piping		10	Gas line refrigerant piping connection (Low pressure)	øb
			11	Gas line refrigerant piping connection (High/Low pressure)	øc

	Heat recovery			Heat pump		
	8HP	10HP	12HP	8HP	10HP	12HP
a	9.52	9.52	12.7	9.52	9.52	12.7
b	19.05	22.2	25.4	not used	not used	not used
c	15.88	19.05	22.2	19.05	22.2	25.4

All dimensions in mm.

6.3 CH-Box dimensions

CH-AP160SSX

Unit: mm

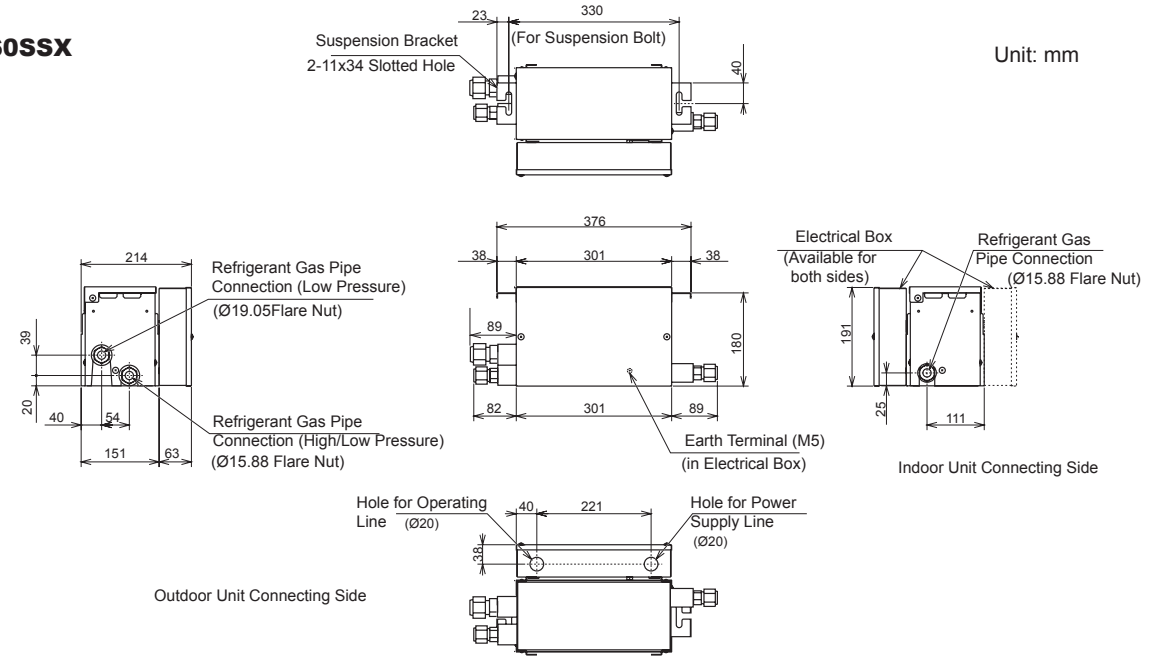

Power Supply	1N~ 230V 50Hz	Net Weight (kg)	6
Power consumption	5W	Number of connectable indoor units	1 to 7
Refrigerant	R410A	Number of Indoor unit total capacity	6.0HP or less

CH-AP280SSX

Unit: mm

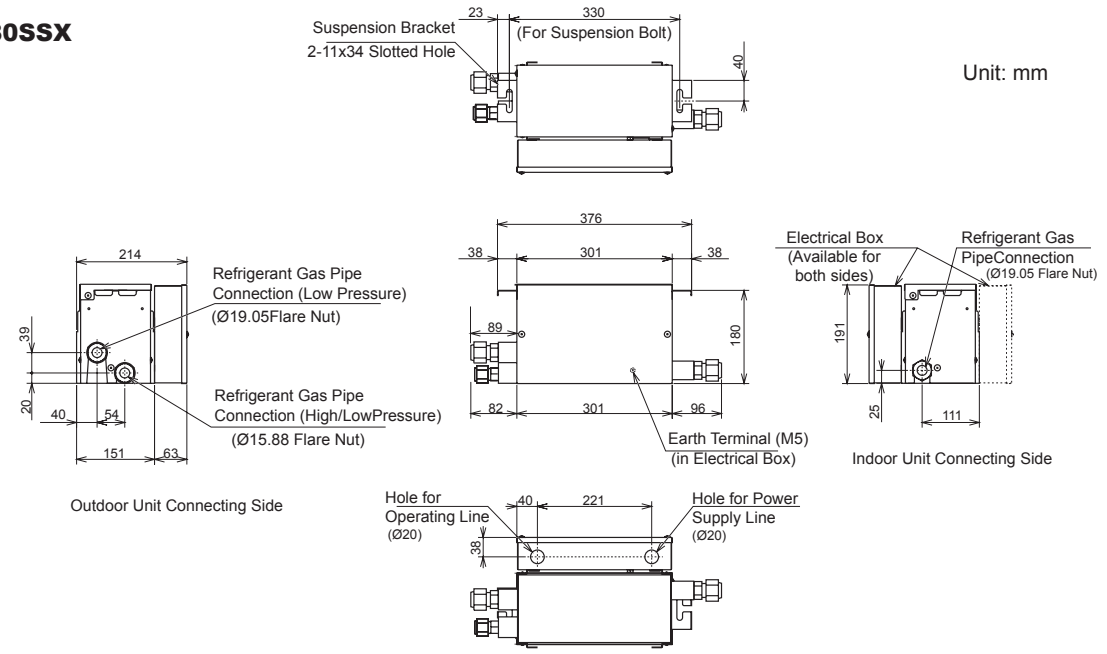

Power Supply	1N~ 230V 50Hz	Net Weight (kg)	6
Power consumption	5W	Number of connectable indoor units	1 to 8
Refrigerant	R410A	Number of Indoor unit total capacity	6.1HP to 10HP

CH-AP04MSSX

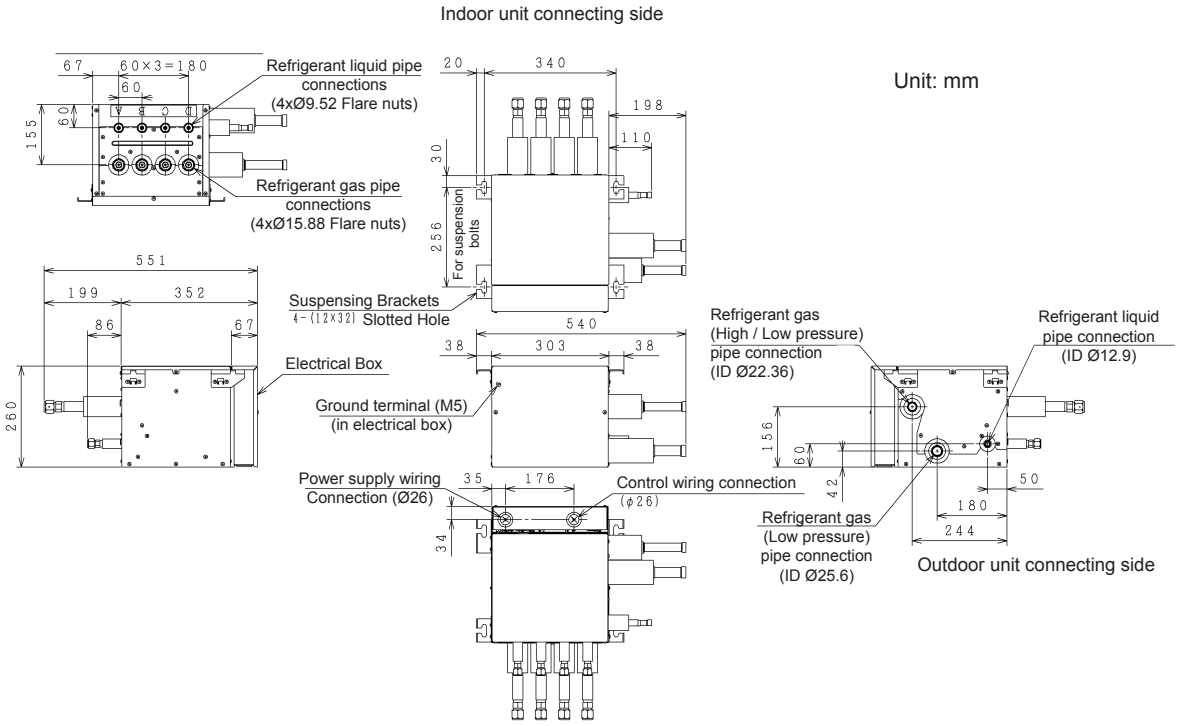

Model	CH-AP04MSSX	Net Weight (kg)	14
Power Supply	1N~ 230V 50Hz	Number of connectable indoor units per branch	1 to 6
Input (W)	11.2	Connectable indoor unit total capacity	16.0HP or less
Refrigerant	R410A	Connectable indoor unit total capacity per branch	6.0HP or less (Max. 16.0kW)

6

CH-AP08MSSX

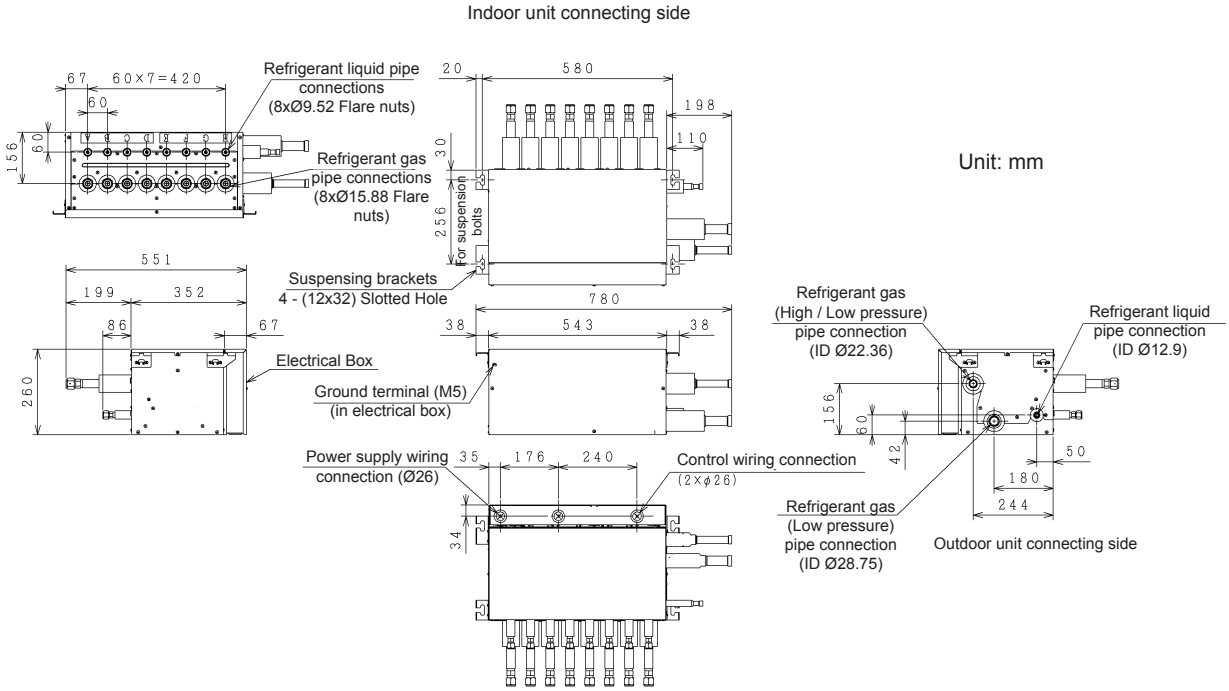

Model	CH-AP08MSSX	Net Weight (kg)	25
Power Supply	1N~ 230V 50Hz	Number of connectable indoor units per branch	1 to 6
Input (W)	22.4	Connectable indoor unit total capacity	30.0HP or less
Refrigerant	R410A	Connectable indoor unit total capacity per branch	6.0HP or less (Max. 16.0kW)

CH-AP12MSSX

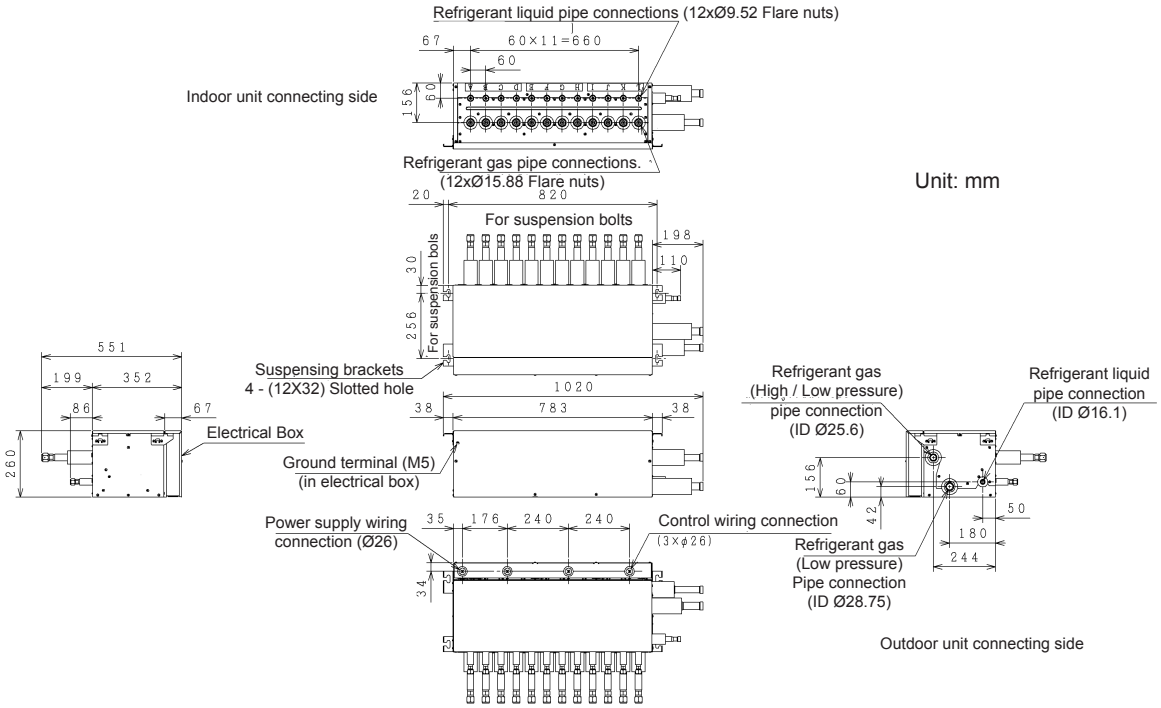

Model	CH-AP12MSSX	Net Weight (kg)	36
Power Supply	1N~ 230V 50Hz	Number of connectable indoor units per branch	1 to 6
Input (W)	33.6	Connectable indoor unit total capacity	30.0HP or less
Refrigerant	R410A	Connectable indoor unit total capacity per branch	6.0HP or less (Max. 16.0kW)

CH-AP16MSSX

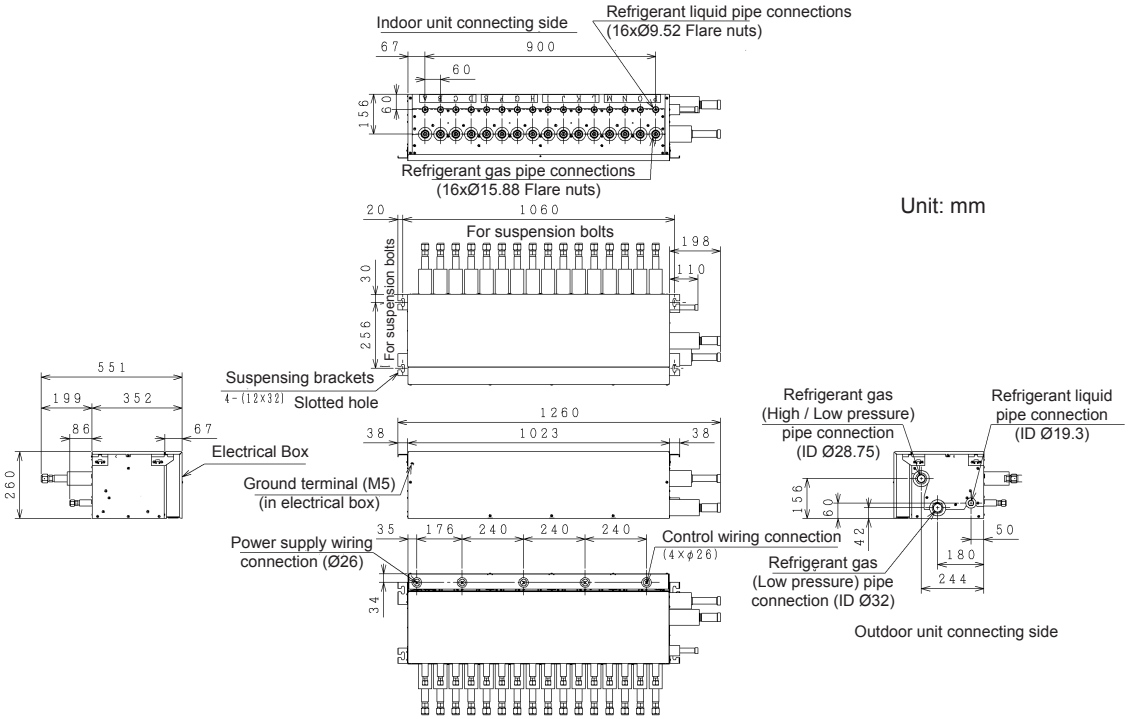

Model	CH-AP16MSSX	Net Weight (kg)	47
Power Supply	1N~ 230V 50Hz	Number of connectable indoor units per branch	1 to 6
Input (W)	44.8	Connectable indoor unit total capacity	30.0HP or less
Refrigerant	R410A	Connectable indoor unit total capacity per branch	6.0HP or less (Max. 16.0kW)

6.4 Clearance conditions

NOTE

- *(Unit: mm)*
- *H: Height of the outdoor unit. When L > H, use a base for outdoor unit to make L ≤ H. Close the base not to allow the outlet air bypassed.*
- *Be sure to use the fan direction guide.*
- *100 mm is the minimum space acceptable on the service cover side when the installation allows an outdoor unit next to other or next to a wall.*

L	A	B
0 < L ≤ 1/2H	600 or greater	300 or greater
1/2H < L ≤ H	1400 or greater	350 or greater

Inlet Side Blocked

Upper side Open

Single Installation

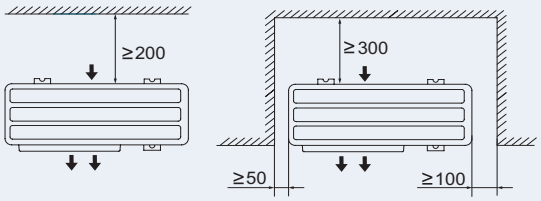

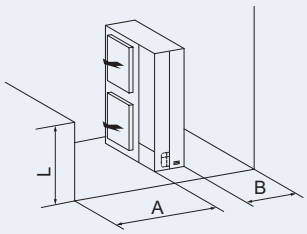

200 mm minimum of the back space is acceptable when the right and left sides are open.
Leave open both right and left sides.

Multiple Installation (Two units or more)

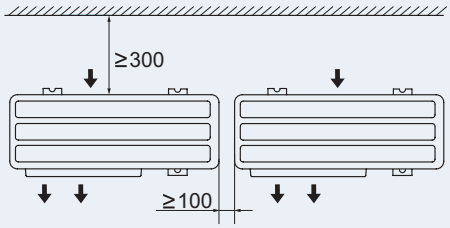

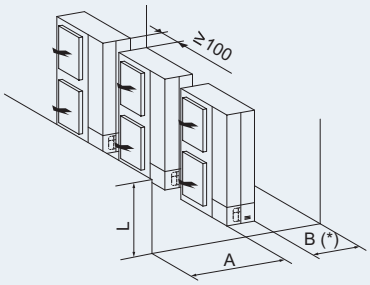

Leave open both right and left sides.
When subject to direct sunlight on the back wall, ensure the length B (*) be 500 or greater.

Upper Side Blocked

Single Installation

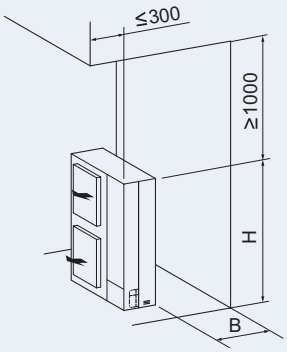

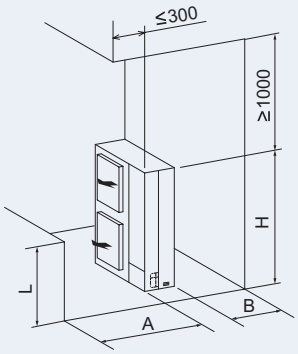

Leave open both right and left sides.

Multiple Installation (Two units or more)

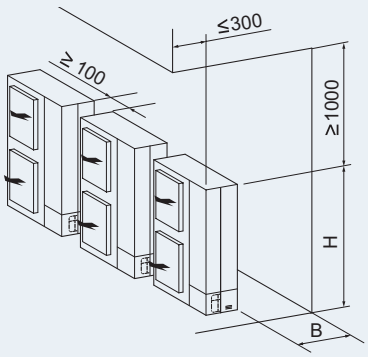

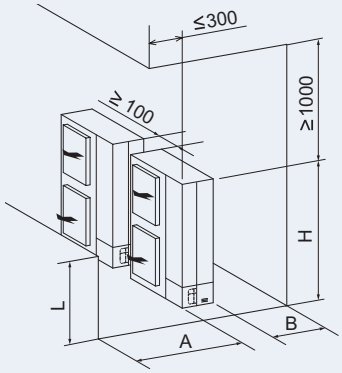

Serial installation allowed up to two units.

Leave open both right and left sides.

Outlet Side Blocked			
Upper Side Open	Single Installation	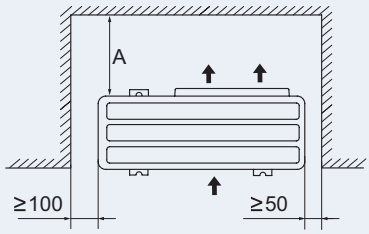	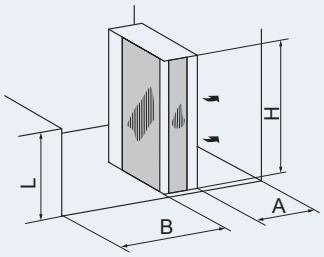 Leave open both right and left sides.
	Multiple Installation (Two units or more)	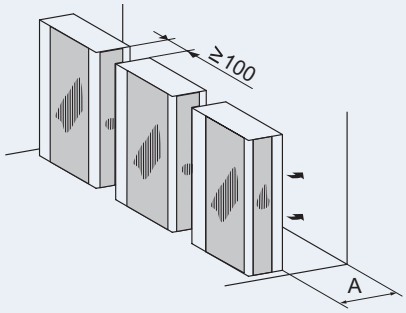	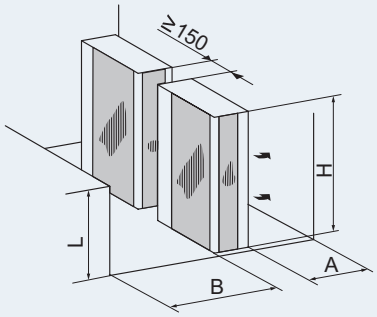 Serial installation allowed up to two units.
		Leave open both right and left sides.	

Lateral Side Blocked			
Upper Side Open	Single Installation	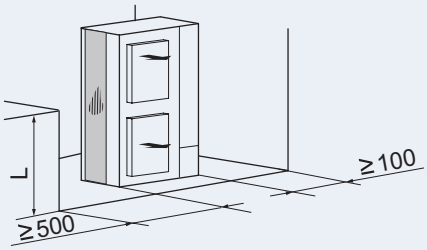	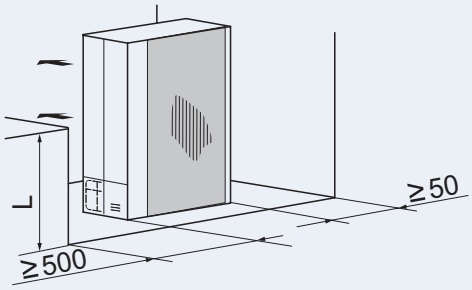
Upper Side Blocked		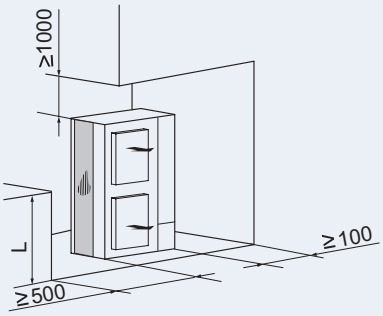	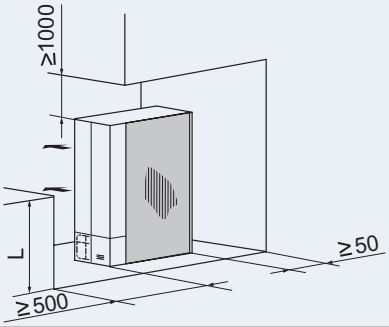

		Stack installation (allowed up to 2 Units)	
Upper Side Open	Inlet Side Blocked	Single Installation	Multiple Installation
		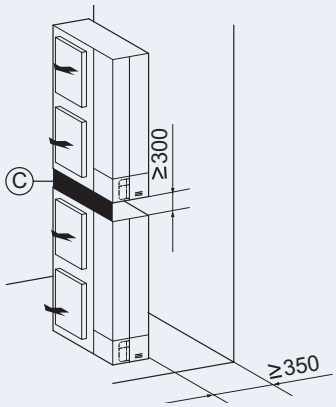	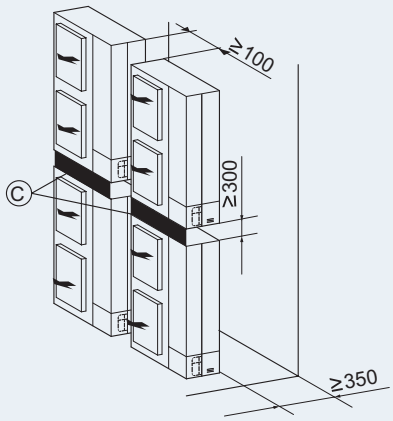
		Serial sideways installation allowed up to two units. Leave open both right and left sides. Close the part C not to allow the outlet air bypassed. Install to avoid the drain water from upper unit falling on the lower unit.	
	Outlet Side Blocked	Single Installation	Multiple Installation
		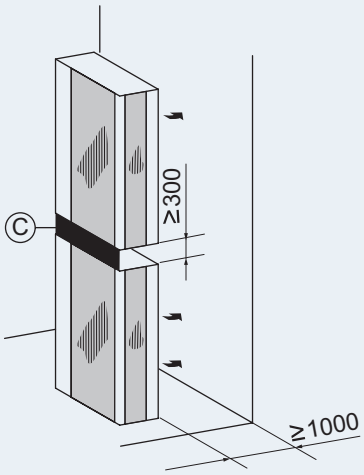	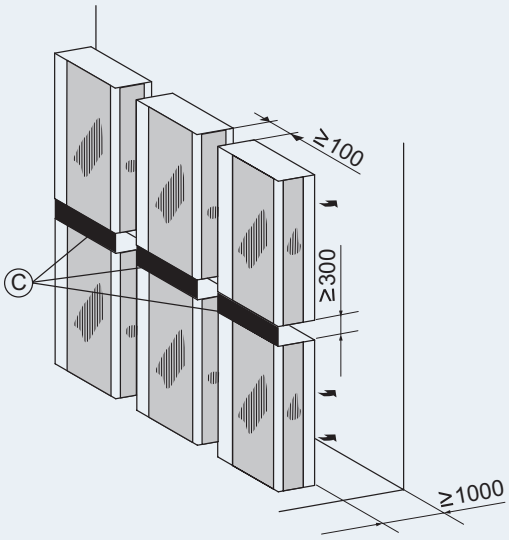
		Close the part C not to allow the outlet air bypassed. Install to avoid the drain water from upper unit falling on the lower unit. Serial side way installation allowed but leave open both right and left sides.	

Serial multiple Installation in Multiple Rows	
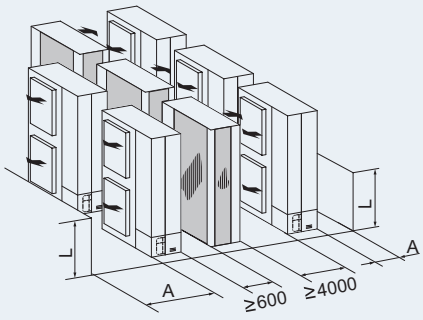 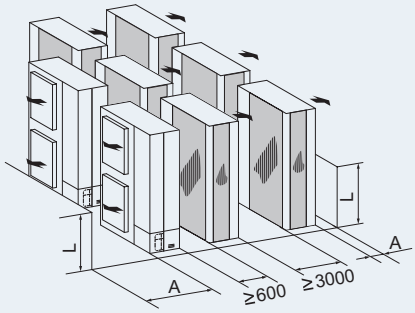	Allow approx. 100 mm of space from the side unit. Leave open both right and left sides. The length A is as shown in the following table:

L	A
0<L≤1/2H	≥200
1/2H<L≤H	≥300

6

6.5 Service space

6.5.1 Service space for RAS-(4-6)FS(V)NME and RAS-(8-12)FSXNME

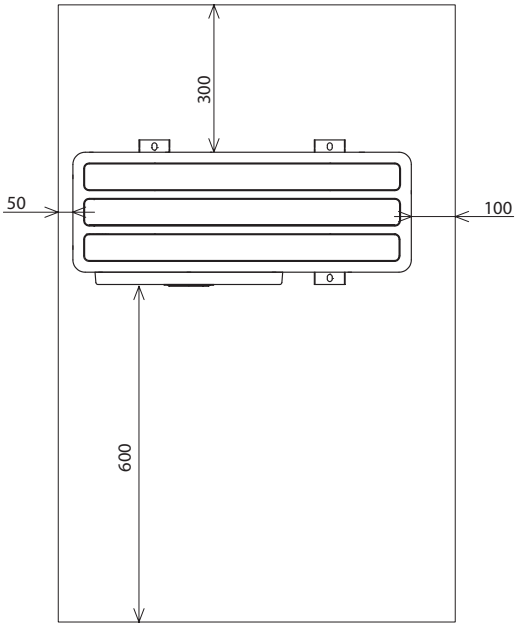

6.5.2 Service space for CH-Box

Install the CH-Box with a proper clearance it for maintenance working.

CH-AP160SSX and CH-AP280SSX

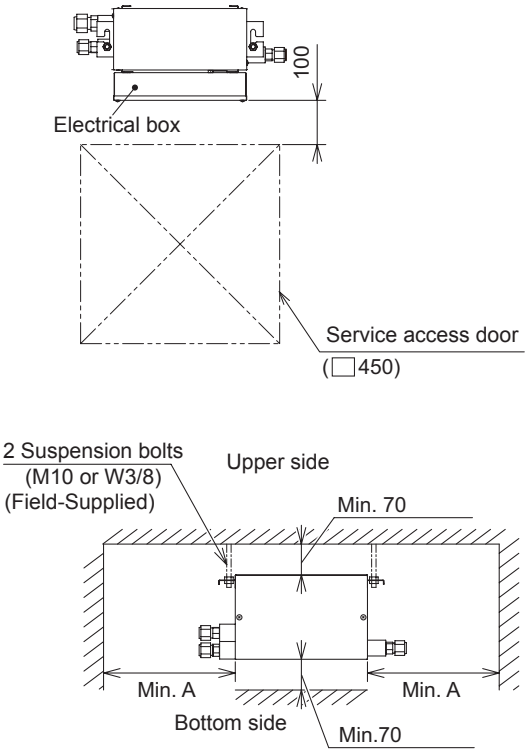

Model \ Size	A
CH-AP160SSX	300
CH-AP280SSX	400

Units in mm.

CH-AP04MSSX

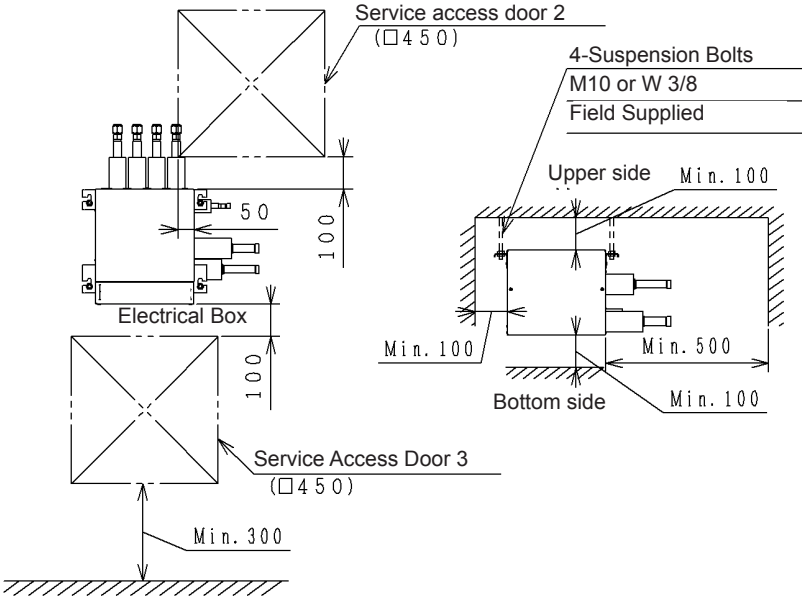

Service Access Door 2	Use during inspection of indoor unit connecting side
Service Access Door 3	Use during inspection of electrical components inside electrical box.

Units in mm.

CH-AP08MSSX

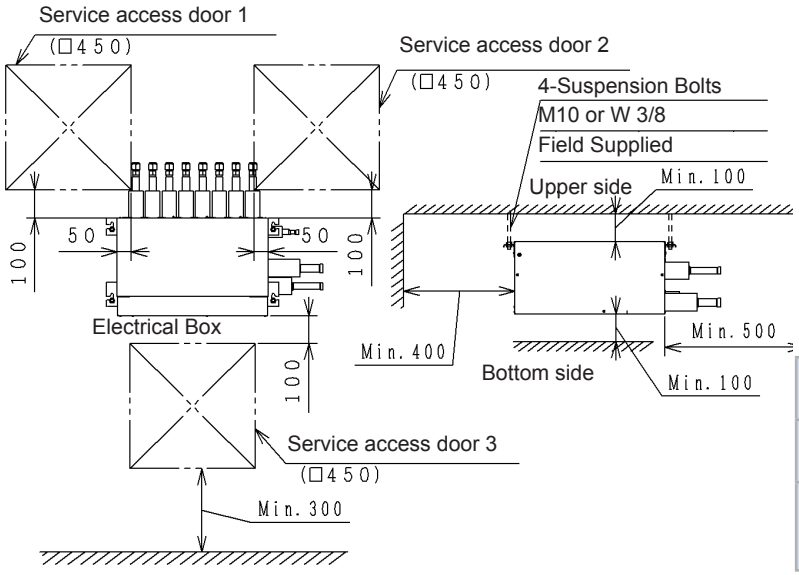

Service Access Door 1	Use during inspection of indoor unit connecting side
Service Access Door 2	Use during inspection of indoor unit connecting side
Service Access Door 3	Use during inspection of electrical components inside electrical box.

Units in mm.

CH-AP12MSSX

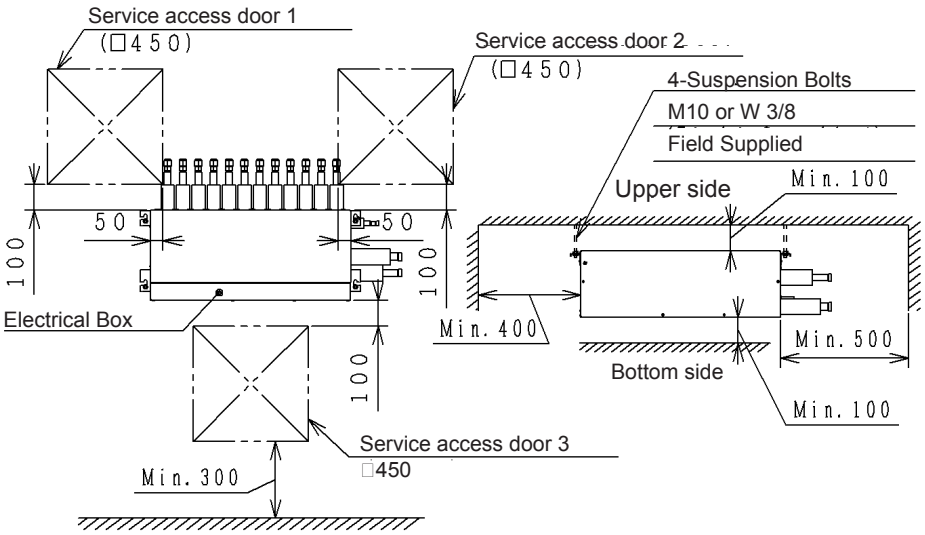

Service Access Door 1	Use during inspection of indoor unit connecting side
Service Access Door 2	Use during inspection of indoor unit connecting side
Service Access Door 3	Use during inspection of electrical components inside electrical box.

Units in mm.

CH-AP16MSSX

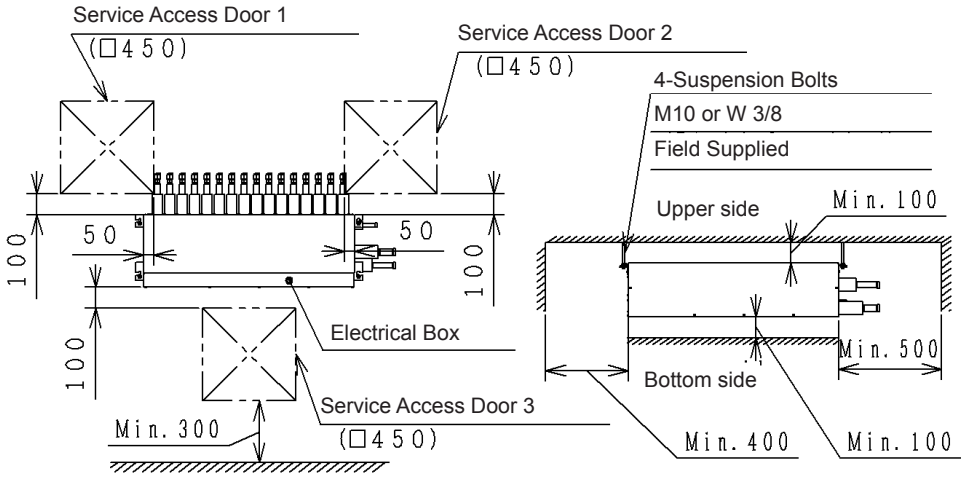

Service Access Door 1	Use during inspection of indoor unit connecting side
Service Access Door 2	Use during inspection of indoor unit connecting side
Service Access Door 3	Use during inspection of electrical components inside electrical box.

Units in mm.

7. Refrigerant cycle

Index

7.1 RAS-(4-6)FS(V)NME 66
7.2 RAS-(8-12)FSXNME 67
7.3 CH-Box 68

7.1 RAS-(4-6)FS(V)NME

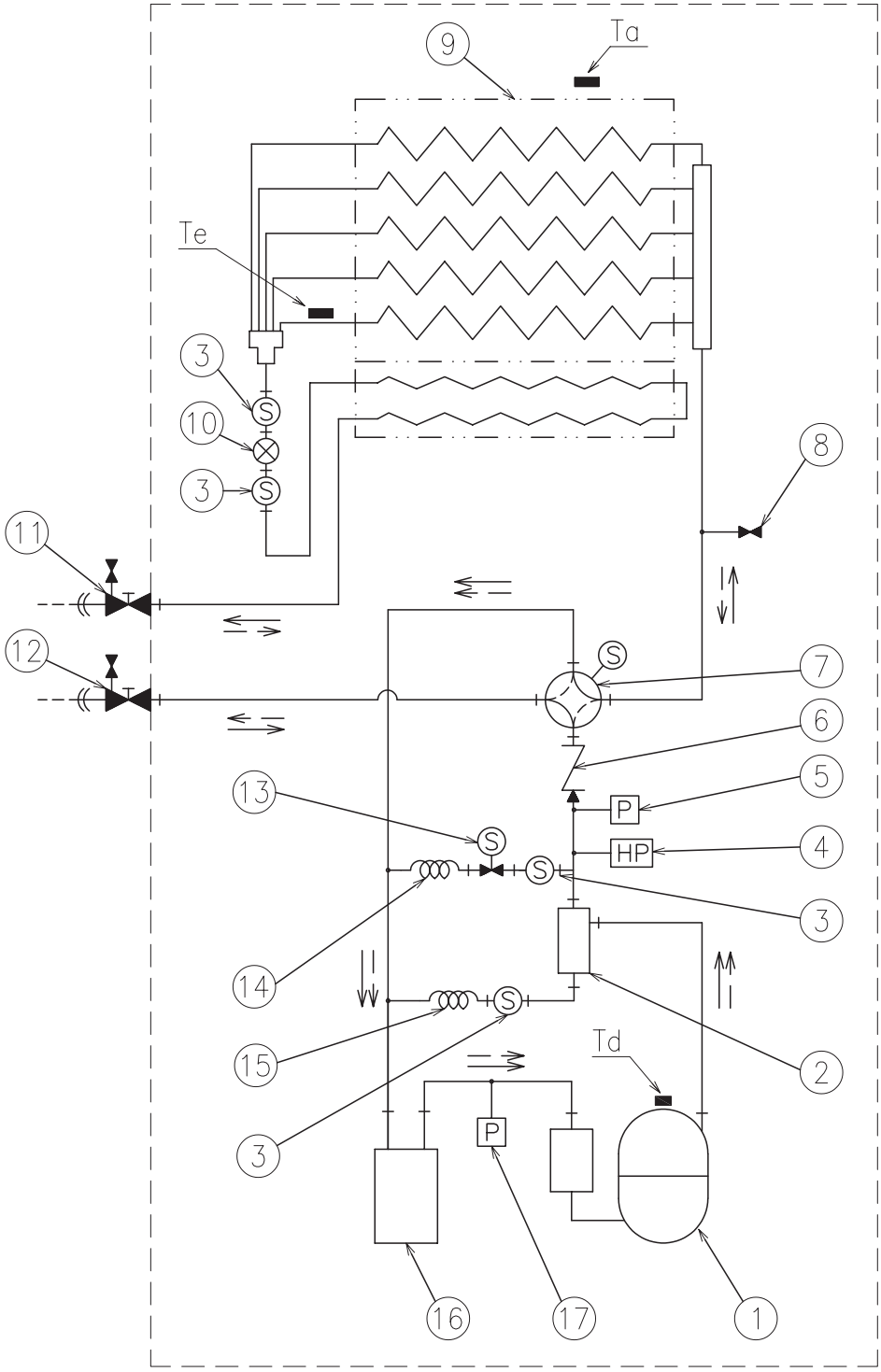

Nº	Name of parts	Nº	Name of parts	Nº	Name of parts
1	Compresor	7	4-way valve	13	Solenoid valve
2	Oil separator	8	Check joint	14	Capillary (gas by-pass)
3	Strainer	9	Heat exchanger	15	Capillary (oil return)
4	Pressure switch (high pressure)	10	Expansion valve	16	Accumulator
5	Pressure switch (control)	11	Stop valve (liquid line)	17	Pressure sensor
6	Check valve	12	Stop valve (gas line)		

7.2 RAS-(8-12)FSXNME

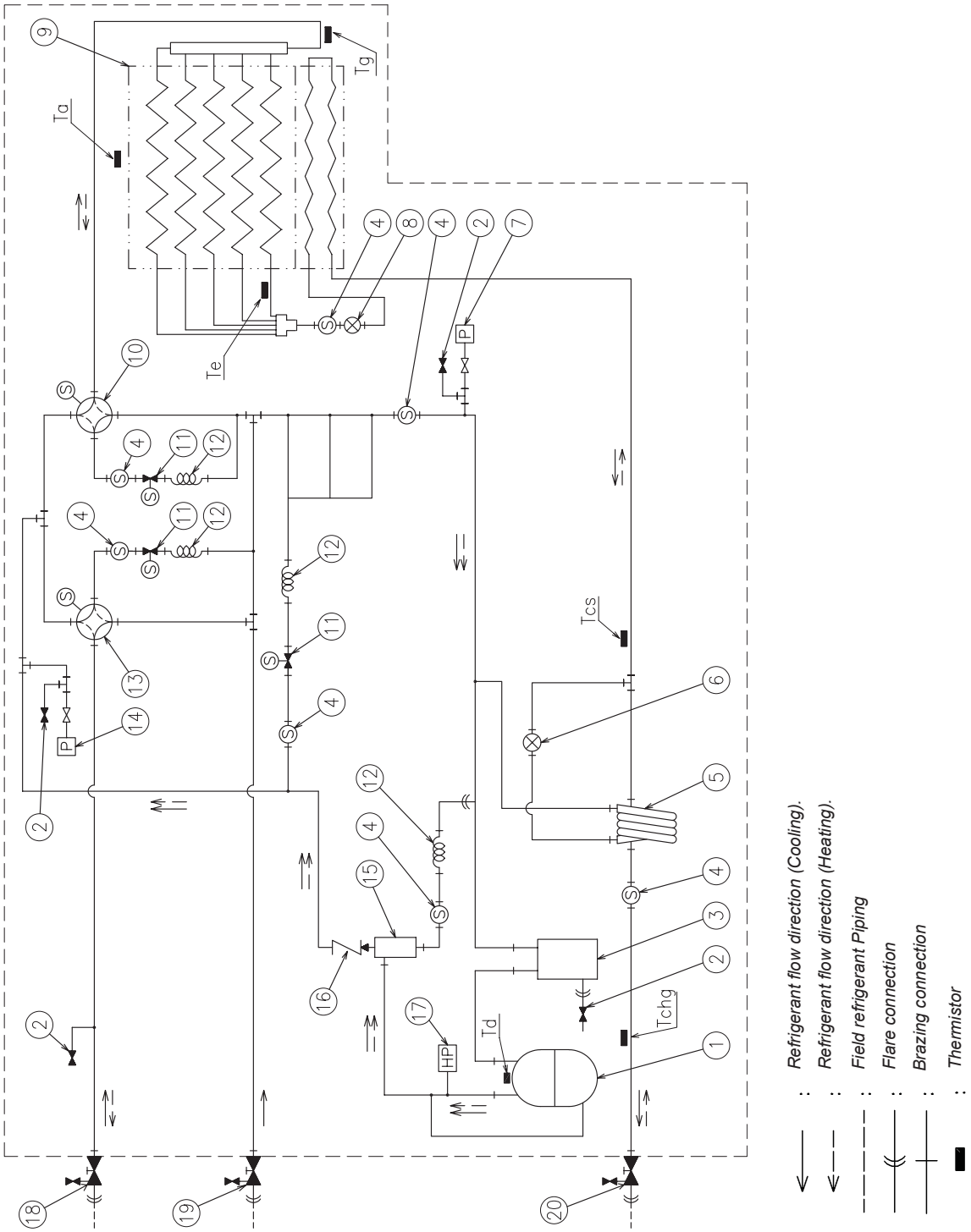

Nº	Name of parts	Nº	Name of parts	Nº	Name of parts
1	Compresor	8	Expansion valve (MV1)	15	Oil separator
2	Check joint	9	Heat exchanger	16	Check valve
3	Accumulator	10	4-way valve (RVR2)	17	Pressure switch (high pressure)
4	Strainer	11	Solenoid valve	18	Stop valve gas line (High/Low)
5	Subcooler	12	Capilary	19	Stop valve gas line (Low)*
6	Expansion valve (MVA)	13	4-way valve (RVR1)	20	Stop valve (Liquid line)
7	Pressure sensor (low pressure)	14	Pressure sensor (high pressure)		

NOTE

** Only for heat recovery system*

7.3 CH-Box

CH-AP160SSX, CH-AP280SSX

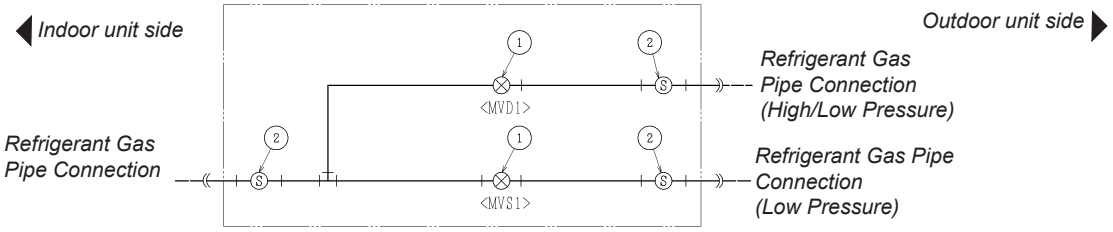

Nº	Name
1	Electronic expansion valve
2	Strainer

: Field refrigerant: Piping
: Flare connection
: Brazing connection
: Change-Over Box

CH-AP04MSSX

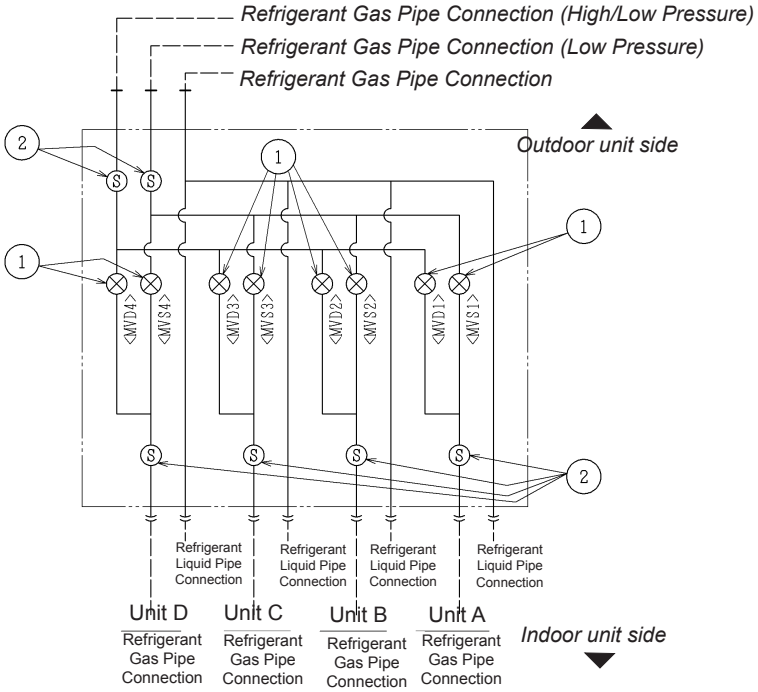

Nº	Name
1	Electronic expansion valve
2	Strainer

: Field refrigerant: Piping
: Flare connection
: Brazing connection
: Change-Over Box

CH-AP08MSSX

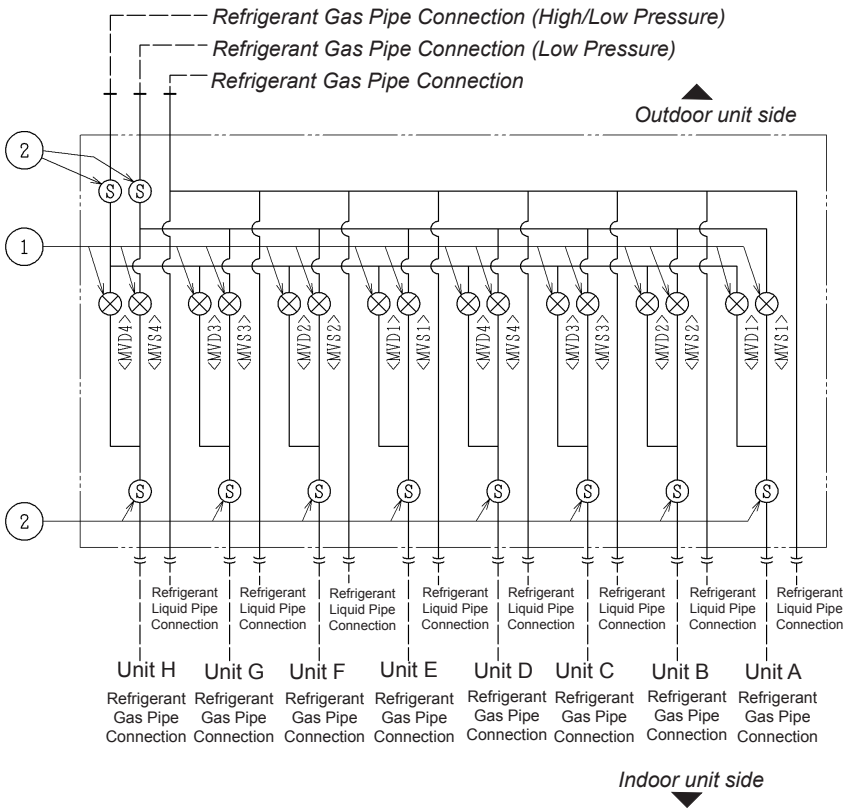

N°	Name
1	Electronic expansion valve
2	Strainer

: Field refrigerant: Piping
: Flare connection
: Brazing connection
: Change-Over Box

CH-AP12MSSX

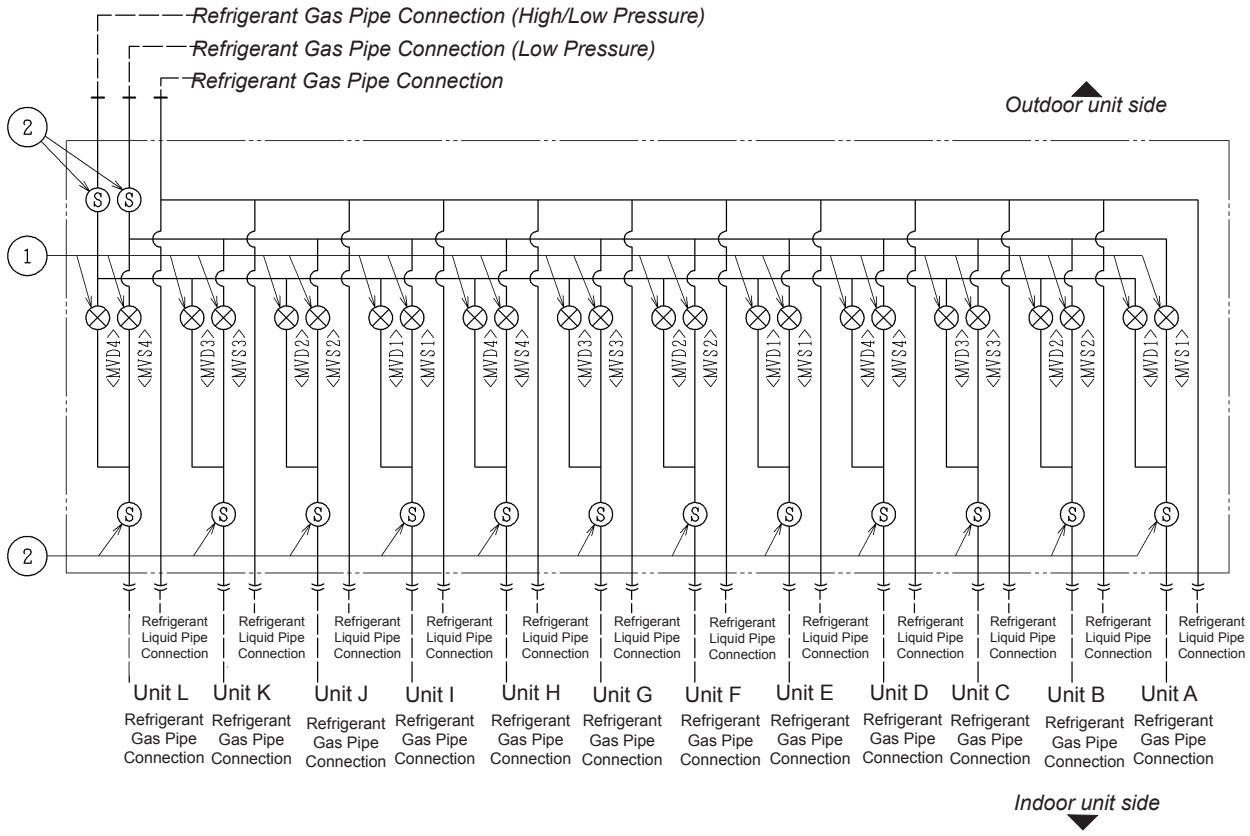

N°	Name
1	Electronic expansion valve
2	Strainer

: Field refrigerant: Piping
: Flare connection
: Brazing connection
: Change-Over Box

CH-AP16MSSX

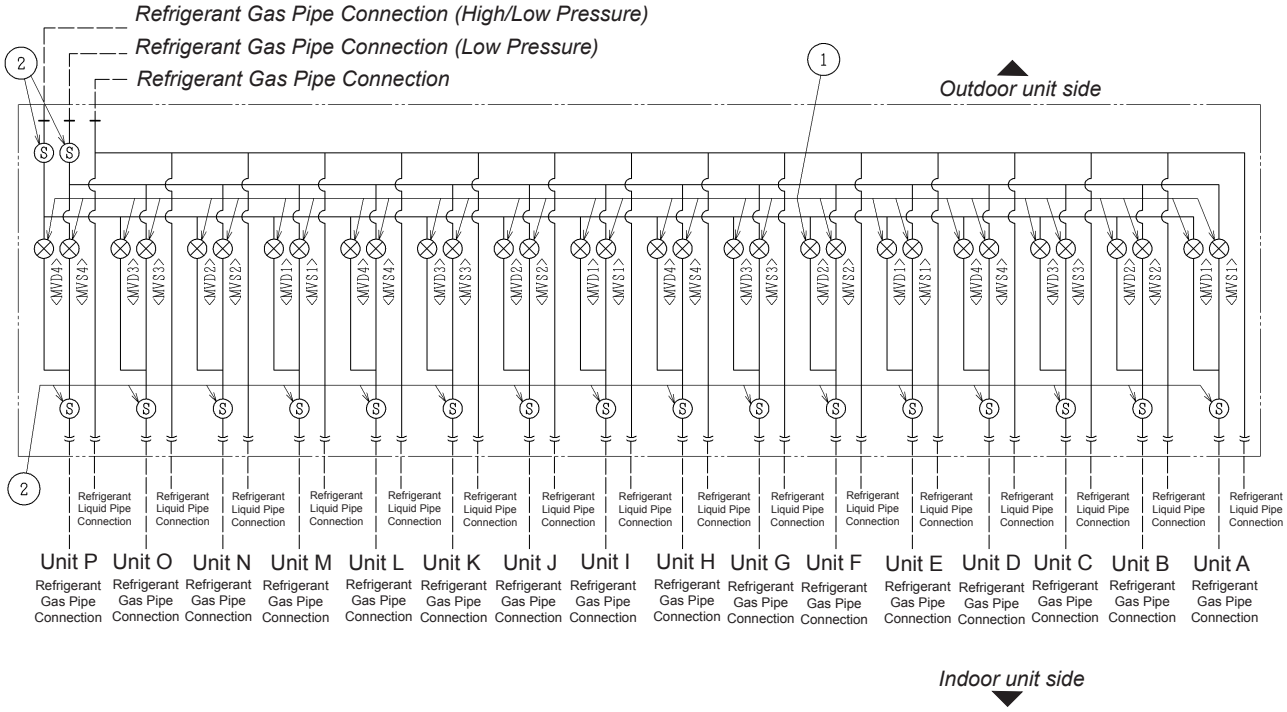

Nº	Name
1	Electronic expansion valve
2	Strainer

: Field refrigerant: Piping
: Flare connection
: Brazing connection
: Change-Over Box

8. Piping work and refrigerant charge

Index

8.1 Refrigerant pipe selection 72

8.1.1 Heat pump systems 73

8.1.1.1 Model sizes 74

8.1.2 Heat recovery systems 75

8.1.2.1 Model sizes 77

8.2 Pipe working conditions 78

8.2.1 RAS-(4-6) FS(V)NME 78

8.2.2 RAS-(8-12)FSXNME 79

8.2.3 Pipe branching restrictions (Installation with Main Piping Branch) 82

8.2.4 Piping work for CH-Box CH-AP(160/280)SSX 83

8.2.4.1 Piping connection 84

8.2.4.2 Piping insulation 85

8.2.5 Piping work for CH-Box CH-AP(04-16)MSSX 85

8.2.5.1 Selecting Piping Size 86

8.2.5.2 Piping insulation 89

8.3 Vaccum pumping 91

8.4 Refrigerant charge 92

8.5 Additional refrigerant charge calculation 93

8.5.1 For RAS-(4-6)FS(V)NME 94

8.5.2 For RAS-(8-12)FSXNME 94

8.6 Precautions in the event of refrigerant leaks 95

8.6.1 Maximum permitted concentration of hydrofluorocarbon (HFC) 95

8.6.2 Calculation of the refrigerant leakage 95

8.6.3 Countermeasures in the event of refrigerant leaks 96

8.7 Drain kit components 96

8.1 Refrigerant pipe selection

The copper pipe used for the installation must be specific for refrigeration systems. Select the pipe size in line with the following instructions:

1 Between the outdoor unit and the branch pipe (Multi-kit): select the same pipe connection size as for the outdoor unit.
2 Between the branch pipe (Multi-kit) and the indoor unit: select the same pipe connection size as for the indoor unit.

CAUTION

- *The copper pipe used in the refrigeration installations is different to the copper pipe used in installations carrying domestic or heating water.*
- *The copper pipe for refrigeration installations is especially treated for outdoors and indoors. The interior surface finish makes it easier for the refrigerant to circulate and withstands the action of the lubricant oil used in outdoor units.*

Select the pipe with the appropriate diameter and thickness. Use the table below to select the most appropriate pipe:

Nominal diameter		Thickness mm	Supply	Alternative pipe and reducer
mm	Inches			
Ø6.35	1/4	0.80	Coil	-
Ø9.52	3/8	0.80	Coil	(Ø9.52-Ø12.7)
Ø12.7	1/2	0.80	Coil	(Ø12.7-Ø15.88)
Ø15.88	5/8	1.00	Coil	(Ø15.88-Ø19.05)
Ø19.05	3/4	1.00	Straight lengths	(Ø19.05-Ø22.2)
Ø22.2	7/8	1.00	Straight lengths	(Ø22.2-Ø25.4)
Ø25.4	1	1.00	Straight lengths	(Ø25.4-Ø28.58)
Ø28.58	1-1/8	1.00	Straight lengths	(Ø28.58-Ø31.75)

NOTE

If the main refrigerant pipe specified in the tables is not available at the installation location, select the size given in brackets. In this case, prepare a suitable reducer.

Always use clean copper pipes with no signs of knocks or cracks. Make sure there is no dust or dampness on the inside. A system with no moisture or oil contamination will give maximum performance and life cycle compared to that of a poorly prepared system.

CAUTION

On completing the installation of the refrigerant pipes, insulate the unions and flare-nuts at the piping connection part completely, insulate them appropriately using suitable insulating material and seal the open space between the holes made and the pipe.

NOTE

- *Do not use insulation material that contains NH3 because it can damage cooper pipe material and can be a source of future leakage.*
- *Where polyethylene foam insulation is used, a 10 mm thick layer should be used for the liquid pipe and between 15 and 20 mm for the gas pipe.*
- *Insulate the liquid piping completely to avoid a decrease of performance; if not, it will cause sweating on the surface of the pipe.*
- *Install the insulation after the pipe surface temperature has dropped to the same temperature as that of the room, otherwise the insulation may melt.*
- *Where branches are supplied by the fitter, these should be appropriately insulated to avoid a decrease in capacity and dew condensation on the surface of the piping caused by low pressure, in line with environmental regulations.*

8.1.1 Heat pump systems

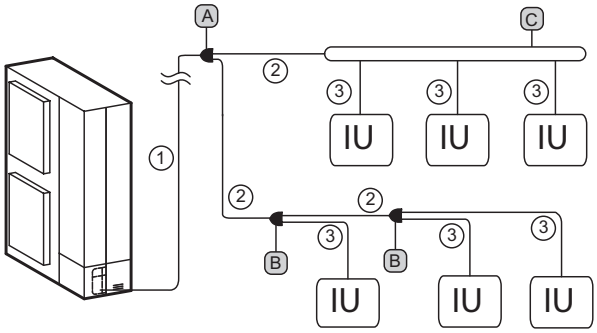

① ***Main pipe diameter (from the OU to the first branch)***

Outdoor unit	Gas	Liquid
RAS-(4-6)FS(V)NME	ø15.88	ø9.52
RAS-8FSXNME	ø19.05	ø9.52
RAS-10FSXNME	ø22.20	ø9.52
RAS-12FSXNME	ø25.40	ø12.70

NOTE

- *In the case that the piping length from the Multi-Kit at the first branch to the terminal indoor unit is over 40m, the size of the main piping should be increased by one size with reducers (field-supplied).*
- *When the maximum length of the equivalent refrigerant pipe from the outdoor unit to the indoor unit is over 70 m for* RAS-(4-6)FS(V)NME or over *100 m for* RAS-(8-12)FSXNME*, the pipe size of liquid line of the main pipe should be increased by one size with reducers (field-supplied).*

② ***Pipe diameter after first branch or between multi-kits***

Total indoor unit capacity after the first branch (HP)	Gas	Liquid
4 - 6	ø15.88	ø9.52
(6-8.99)	ø19.05	ø9.52
(9-11.99)	ø22.20	ø9.52
(12-15.6)	ø25.40	ø12.70

NOTE

If the multi-kit size is larger than the first branch,adjust the multi-kit size to the first branch. In case that the selected pipe size after the first branch is larger than the pipe size before the first branch, use the same pipe size as before the branch.

③ ***Pipe diameter between multi-kit and indoor unit***

Indoor unit capacity (HP)	Gas	Liquid
0.4-1.5	ø12.70	ø6.35 (*)
2	ø15.88	ø6.35 (*)
2.5-6.0	ø15.88	ø9.52
8.0	ø19.05	ø9.52
10.0	ø22.20	ø9.52

NOTE

- *(*): When the liquid piping length is longer than 15m, use Ø9.52 pipe and reducer (field-supplied).*
- *The pipe diameter should be the same as the IU piping connection size. Check the corresponding IU connection sizes.*

Ⓐ ***First branch and*** Ⓑ ***multi-kits after the first branch***

Ⓐ Outdoor unit HP	Ⓑ Total indoor unit HP	Model
4-10	<12	E-102SN4
12	12-15.6	E-162SN4

Ⓒ ***Header branch***

Total indoor unit HP	Nº of header branches	Model
2-8	4	MH-84AN1
4-10	8	MH-108AN

8.1.1.1 Model sizes

◆ Line branch

A	To indoor unit
B	To outdoor unit
C	To main piping

Model	Gas line	Liquid line
E-102SN4	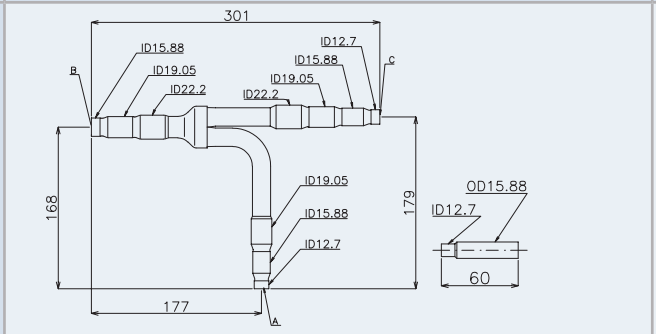	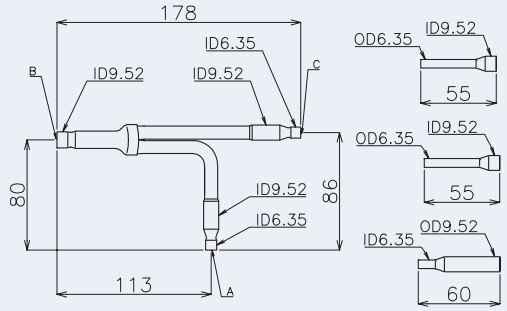
E-162SN4	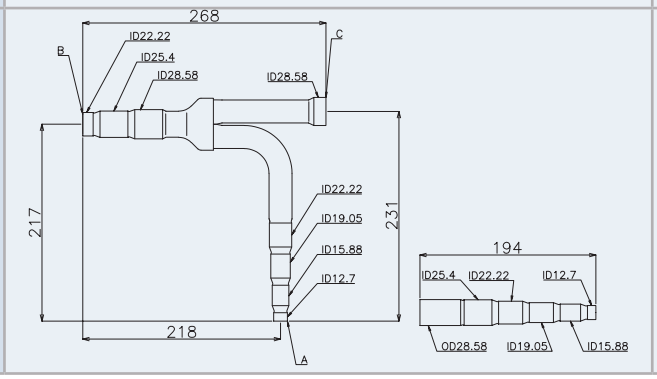	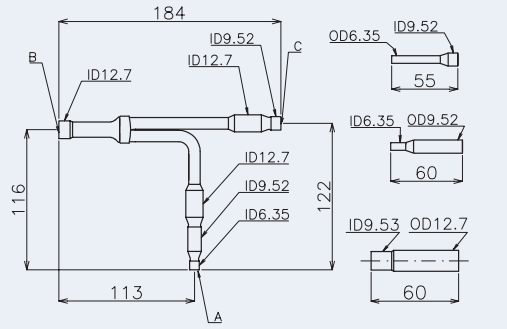

Unit: mm, ID: Inner Diameter, OD: Outer Diameter

◆ Header branch

MH-84AN1					
Gas line	Expander for the gas line	Shut-off pipe for the gas line	Liquid line	Expander for the liquid line	Shut-off pipe for the liquid line
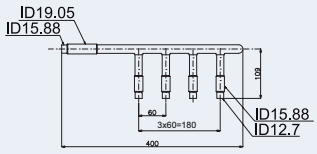	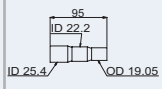	Quantity: 2	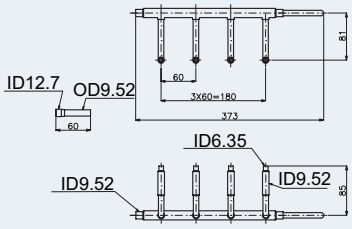	Quantity: 4	Quantity: 2

MH-108AN					
Gas line	Expander for the gas line	Shut-off pipe for the gas line	Liquid line	Expander for the liquid line	Shut-off pipe for the liquid line
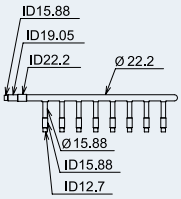	Quantity: 2	Quantity: 6	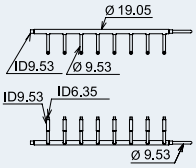	Quantity: 8	Quantity: 6

8.1.2 Heat recovery systems

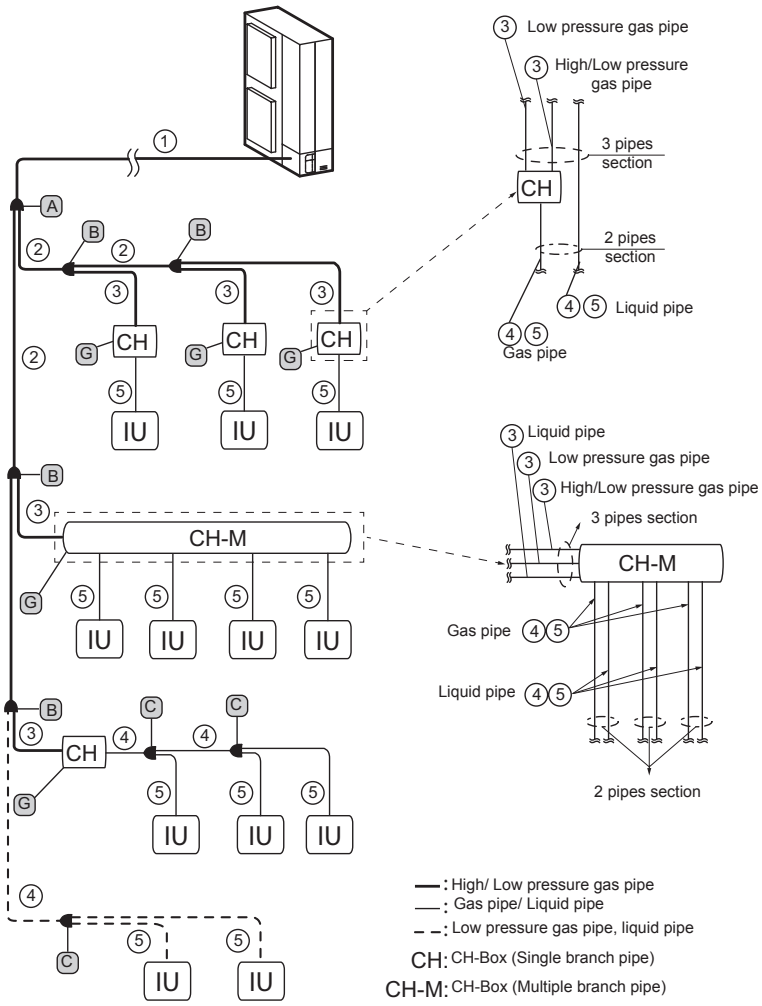

If a header branch is used instead of multi-kit

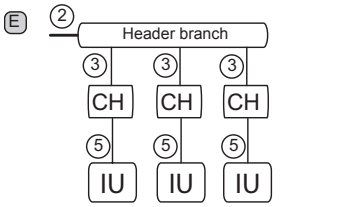

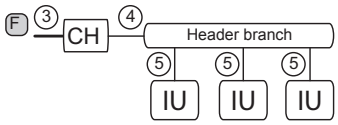

CAUTION

Header branch cannot be connected to upstream or downstream piping of CH-Box multiple.

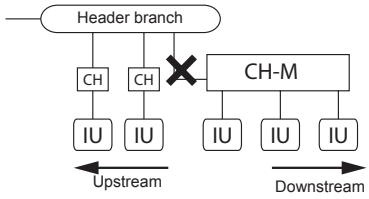

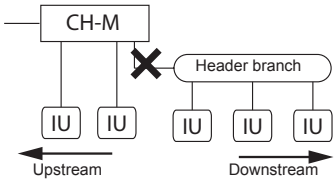

① ***Main pipe diameter (from the OU to the first branch)***

Outdoor unit	Gas, low pressure	Gas, high/low pressure	Liquid
RAS-8FSXNME	ø19.05	ø15.88	ø9.52
RAS-10FSXNME	ø22.20	ø19.05	ø9.52
RAS-12FSXNME	ø25.40	ø22.20	ø12.70

NOTE

When the maximum length of the equivalent refrigerant pipe from the OU to the IU is over 100 m the pipe size of liquid line of the main pipe should be increased by one size with reducers (field-supplied).

② ***Pipe diameter after first branch or between multi-kits and*** ③ ***Pipe diameter between the multi-kit and the CH-Box***

Total indoor unit capacity after the first branch (HP)	Gas, low pressure	Gas, high/low pressure	Liquid (*)
< 6	ø15.88	ø12.70	ø9.52
(6-8.99)	ø19.05	ø15.88	ø9.52
(9-11.99)	ø22.20	ø19.05	ø9.52
(12-15.6)	ø25.40	ø22.20	ø12.70

NOTE

- *(*) CH-Box (single branch type) is not connected to liquid pipe.*
- *If the multi-kit size is larger than the first branch,adjust the multi-kit size to the first branch. In case that the selected pipe size after the first branch is larger than the pipe size before the first branch, use the same pipe size as before the branch.*
- *If the size of the diameter between the multi-kit and the CH-Box is larger than the main pipe diameter, adjust the diameter to the same size as the main pipe diameter.*

④ *Pipe diameter for 2 pipes between CH-Box and multi-kit or between multi-kits*

Total indoor unit capacity after the first branch (HP)	Gas, low pressure	Liquid
< 6	ø15.88	ø9.52
(6-8.99)	ø19.05	ø9.52
(9-11.99)	ø22.20	ø9.52
(12-15.6)	ø25.40	ø12.70

⑤ *Pipe diameter between multi-kit and IU or between CH-Box and IU*

Indoor unit capacity (HP)	Gas	Liquid
0.4-1.5	ø12.70	ø6.35 (*)
2	ø12.70 / ø15.88	ø6.35 (*)
2.5-6.0	ø15.88	ø9.52
8.0	ø19.05	ø9.52
10.0	ø22.20	ø9.52

NOTE

- *(*): When the liquid piping length is longer than 15m, use Ø9.52 pipe and reducer (field-supplied).*
- *The pipe diameter should be the same as the indoor unit piping connection size. Check the indoor unit connection sizes.*

Ⓐ *First branch and* Ⓑ *multi-kits after the first branch (3 pipes section)*

Ⓐ Outdoor unit HP	Ⓑ Total indoor unit HP	Model
-	<6	E-52XN3
8-10	6-11.99	E-102XN3
12	12-15.6	E-162XN3

Ⓒ *Multi-kit after the first CH-Box or cooling only section (2 pipes section)*

Total indoor unit HP	Model
<12	E-102SN4
12-15.6	E-162SN4

Ⓔ *Header branch for 2 pipes section*

Total indoor unit HP	Nº of header branches	Model
4-10	8	MH-108XN

Ⓕ *Header branch for 3 pipes section*

Total indoor unit HP	Nº of header branches	Model
2-8	4	MH-84AN1
4-10	8	MH-108AN

Ⓖ *CH-Box*

CH-Box model	Branch	Nº of connectable IU per branch	IU maximum connection capacity	
			(HP)	for 1 branch (HP)
CH-AP160SSX	1	7	≤6.0	≤6.0
CH-AP280SSX	1	8	≤10.0	≤10.0
CH-AP04MSSX	4	6	≤16.0	≤6.0 *(*)*
CH-AP08MSSX	8	6	≤30.0	≤6.0 *(*)*
CH-AP12MSSX	12	6	≤30.0	≤6.0 *(*)*
CH-AP16MSSX	16	6	≤30.0	≤6.0 *(*)*

NOTE

(*) Up to two 8.0, 10.0HP type indoor units can be connected to the CH-Box within the "Indoor unit maximum connection capacity". Make sure to increase the pipe connection size by using the appropriate accessory pipe.

8.1.2.1 Model sizes

◆ Line branch

A	To indoor unit
B	To outdoor unit
C	To main piping

Model	Gas line	High/low pressure gas line	Liquid line
E-52XN3	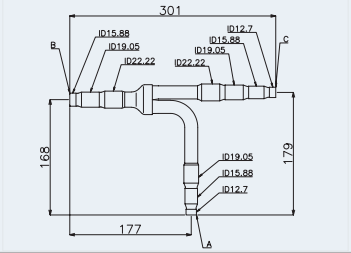	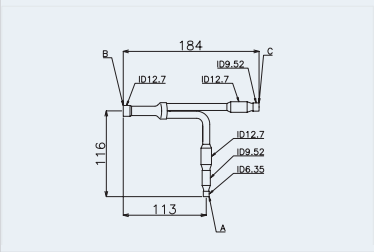	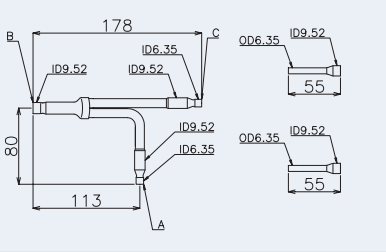
E-102XN3	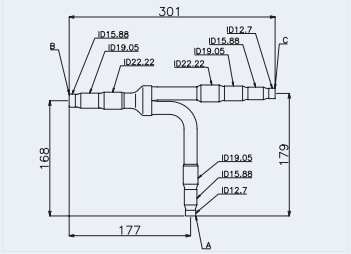	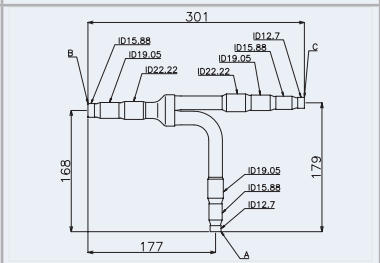	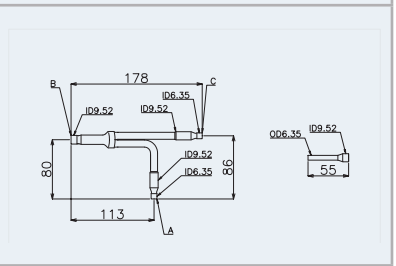
E-162XN3	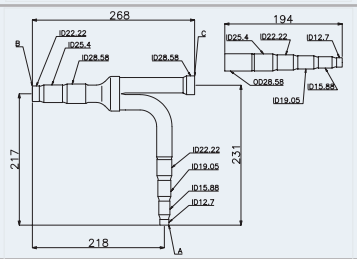	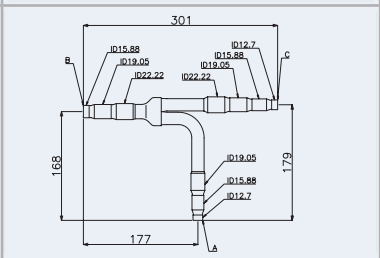	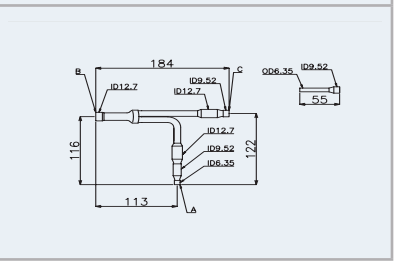

Unit: mm, ID: Inner diameter, OD: Outer diameter

◆ Header branch

MH-108XN					
Gas line	Expander for the gas line	Shut-off pipe for the gas line	Liquid line	Expander for the liquid line	Shut-off pipe for the liquid line
Low pressure			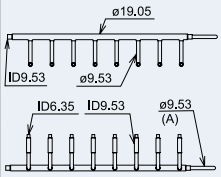 (A): For closing	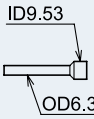 Quantity: 10 2: For end of multi-kit connection. 8: For unit piping connection.	Quantity: 6
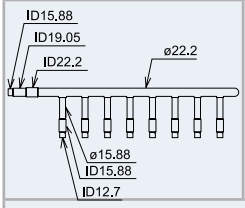	Quantity: 2 (for end of multi-kit connection)	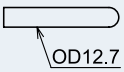 Quantity: 6			
High pressure					
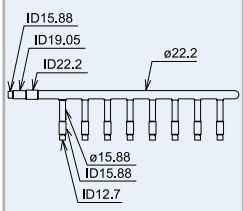	Quantity: 8 (for end of multi-kit connection 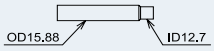 Quantity: 1 (for end of multi-kit connection)	Quantity: 6			

8.2 Pipe working conditions

IMPORTANT CONSIDERATIONS

- *The air flow volume for indoor units of 0.6HP, 0.8HP and 1.0HP is set higher than that for indoor units of 1.5HP or more. Make sure to select appropriate indoor units when installing indoor units where cold draft may occur during heating operation. If installing indoor units in such places, refer to the recommended number of connectable indoor units.*
- *Limit to "Recommended maximum number of combined indoor units" when the piping length exceeds any of the conditions permitted in this chapter tables according to the models.*
- *For connecting Wall Type (RPK-FSNH4M Series) with the Expansion Valve Kit, the number of connectable indoor unit is limited according to the total piping length between the expansion valve and the indoor unit. The total piping length must be less than the length indicated in the table. HITACHI will accept no responsibility for units that have been charged with non-specified refrigerant once.*
- *Make sure to charge the correct quantity of additional refrigerant on site according to the length of the refrigerant liquid pipes, according to the number and model of indoor units, and according to the connection capacity ratio of indoor units. A charge too low or too high could cause damage to the compressor. It is of the utmost importance to adjust the appropriate amount of refrigerant when exceeding the recommended number of indoor units shown in brackets in column "Combination quantity" in chapter "3.2 Indoor unit combinability"*

8.2.1 RAS-(4-6) FS(V)NME

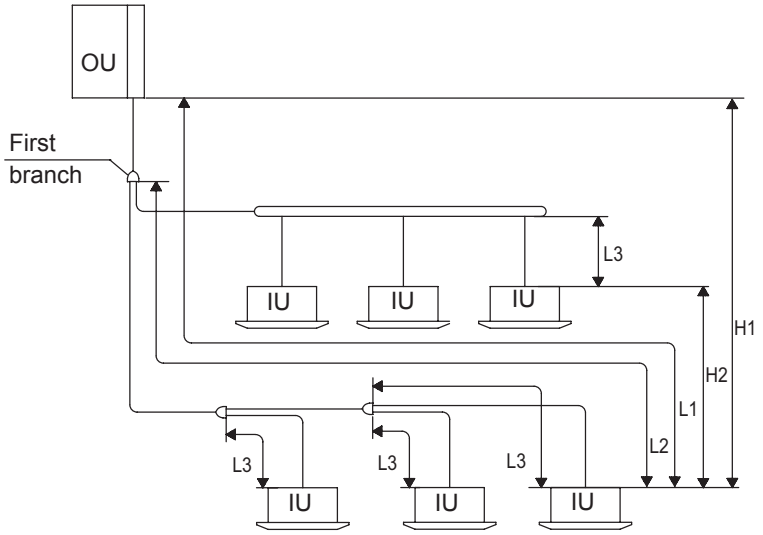

Part		Mark	Permitted pipe length
Total Piping Length		Total liquid piping actual length	≤ 180m
Maximum piping length	Actual length	L1	≤ 85m
	Equivalent length		≤ 100m
Maximum piping length between Multi-Kit of 1st branch and each IU		L2	≤ 40m
Maximum piping length between each Multi-Kit and each IU		L3	≤ 15m
Height difference between OU and IU	OU is Higher	H1	≤ 30m
	OU is Lower		≤ 30m
Height difference between IU		H2	≤ 15m

NOTE

- *Install the indoor unit and the multi-kit according to the instructions given in this manual.*
- *Check that the gas pipe and the liquid pipe are equivalent in terms of length and installation system.*

8.2.2 RAS-(8-12)FSXNME

◆ **2 pipes**

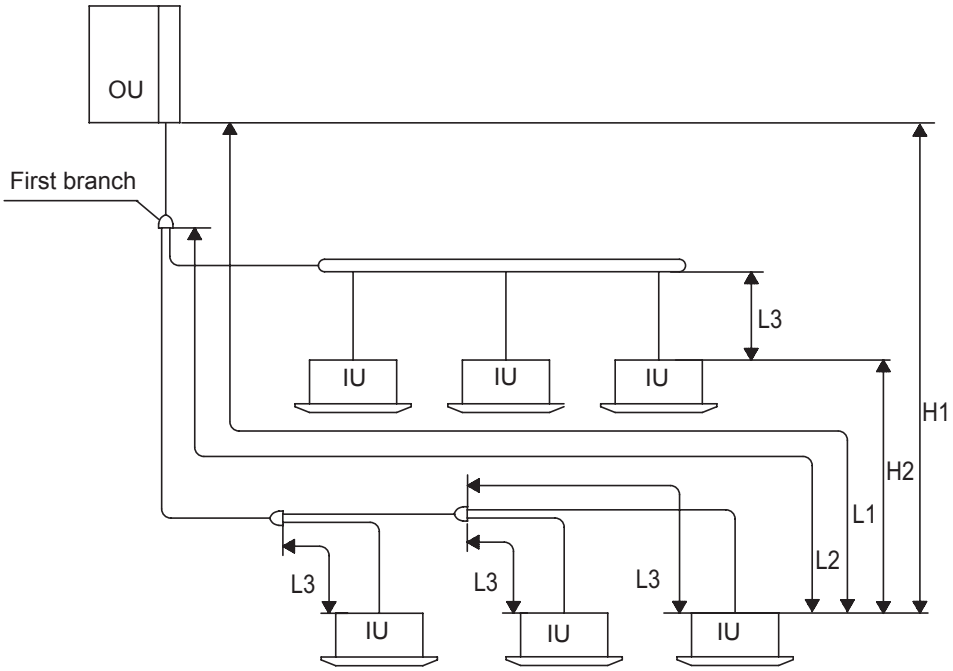

Part		Mark	Permitted pipe length	
			≤ Recommended number of connected indoor units	≥ Recommended number of connected indoor units
Total Piping Length		Total liquid piping actual length	≤ 500m	≤ 300m
Maximum Piping Length	Actual Length	L1	≤ 125m	≤ 125m
	Equivalent Length		≤ 150m	≤ 150m
Max. piping length between multi-kit of 1st branch and each IU		L2	≤ 90m	≤ 40m
Max. piping length between each multi-kit and each IU		L3	≤ 40m	≤ 30m
Height difference between outdoor units and indoor units	Outdoor Unit is Higher	H1	≤ 50m	≤ 50m
	Outdoor Unit is Lower		≤ 40m	≤ 40m
Height difference between indoor units		H2	≤ 15m	≤ 15m

NOTE

- *Install the indoor unit and the multi-kit according to the instructions given in this manual.*
- *The installation conditions for the refrigerant pipes are different depending on the number of indoor units connected.*
- *Check that the gas pipe and the liquid pipe are equivalent in terms of length and installation system.*
- *The total pipe length permitted must be less than 500 m due to the maximum additional refrigerant charge limitation.*
- *Where the length of pipe L3 between each multi-kit and each indoor unit is considerably longer than on another indoor unit, the refrigerant will not flow correctly and performance is lower in comparison with other models (recommended pipe length: up to 15 m).*
- *Note that the approval from HITACHI Customer Service Department must be obtained beforehand in case that the recommended indoor units is exceeded and the total piping lenght is over 300m. Contact the HITACHI Customer Service Department in order to provide the relevant system characteristics for feasibility evaluation.*
- *Note that the approval from HITACHI Customer Service Department must be obtained beforehand in case that height difference is over 50m.*
- *When the total length of the refrigerant pipes exceeds 300 m, the maximum additional refrigerant charge is restricted.*

◆ 3 pipes

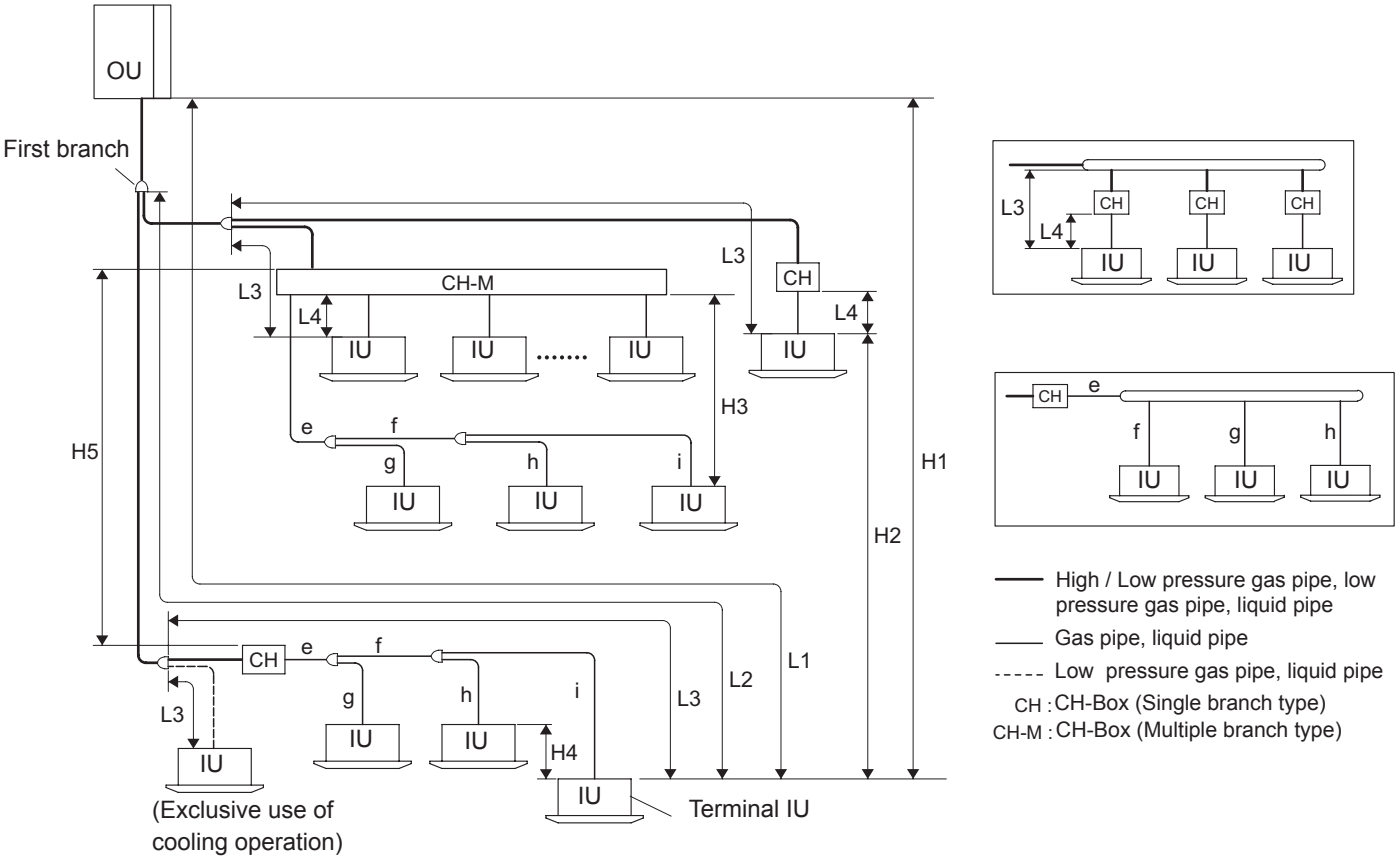

Part		Mark	Permitted pipe length	
			≤ Recommended number of connected indoor units	≥ Recommended number of connected indoor units
Total Piping Length		Total Liquid Piping Actual Length	≤ 500m	≤ 300m
Maximum piping length	Actual Length	L1	≤ 125m	≤ 125m
	Equivalent Length		≤ 150m	≤ 150m
Maximum piping length between Multi-Kit of 1st branch and each IU		L2	≤ 90m	≤ 40m
Maximum piping length between each multi-kit / CH-Box (Multiple branch type) and each indoor unit		L3 (*)	≤ 40m	≤ 30m
Total piping length between CH-Box and each indoor unit		* L4 * e+f+g+h+i	≤ 40m	≤ 40m
Height difference between outdoor units and indoor units	Outdoor unit is Higher	H1	≤ 50m (**)	≤ 50m (**)
	Outdoor unit is Lower		≤ 40m	≤ 40m
Height difference between indoor units		H2	≤ 15m	≤ 15m
Height difference between CH-Box and indoor units		H3	≤ 15m (*2)	≤ 15m (*2)
Height difference between i using the same branch of CH-Box		H4	≤ 4m	≤ 4m
Height difference between CH-Boxes		H5	≤ 15m	≤ 15m

NOTE

- *The condition of refrigerant piping installation is different depending on the connected indoor unit quantities.*
- *(*) If the piping length (L3) between each multi-kit and indoor unit is considerably longer than other indoor unit, refrigerant may not flow well and also performance may be deteriorated compared to other models (Recommended Piping Length: within 15m).*
- *Check the gas pipe and liquid pipe are equivalent in terms of the piping length and piping system.*
- *Use a multi-kit (system components) for the branch pipe of indoor unit.*
- *Install the indoor unit, multi-kit and CH-Box according to each "Installation & Maintenance Manual".*
- *In case that the combination of indoor unit capacity is 10HP for CH-AP280SSX, the performance may decrease approximate 5% in cooling and 10% in heating.*
- *The excess of the total capacity may cause insufficient performance and abnormal sound. Be sure to connect within the allowable total capacity.*
- *For the exclusive cooling operation, connect indoor units with low pressure gas pipe and liquid pipe (without CH-Box). The total capacity of the exclusive cooling operation should be smaller than 50% of the total indoor unit capacity.*
- *In case that a branch is located downstream of the CH-Box and also the connected indoor unit capacity is 1.5HP or less, use Ø15.88 for the gas pipe.*
- (*) *The piping length calculation is not included the Multi-kit between CH-Box and indoor unit. (Lm in the following examples are not L3).*

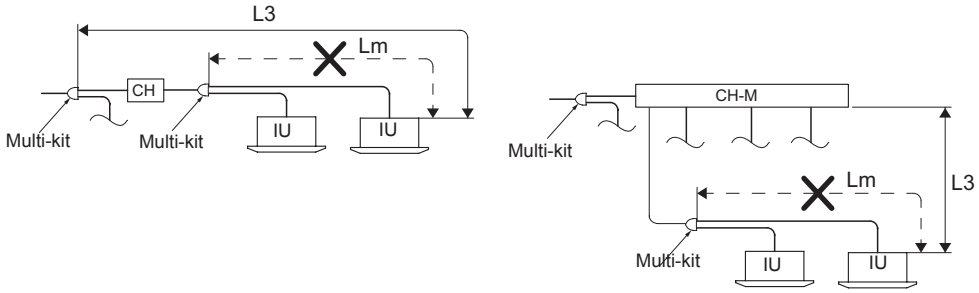

- *(**):Note that the approval from HITACHI Customer Service Department must be obtained beforehand in case that the recommended indoor units is exceeded and the total piping lenght is over 300m. Contact the HITACHI Customer Service Department in order to provide the relevant system characteristics for feasibility evaluation.*
- *Note that the approval from HITACHI Customer Service Department must be obtained beforehand in case that height difference is over 50m.*
- *Recommended height difference between CH-Box and indoor unit is within 15m. If the height difference exceed this value, it may cause a decrease of operating performance.*
- *The total pipe length permitted must be less than 500 m due to the maximum additional refrigerant charge limitation. In case "Recommended IU quantity" is exceeded, next graph restriction applies to total piping length:*

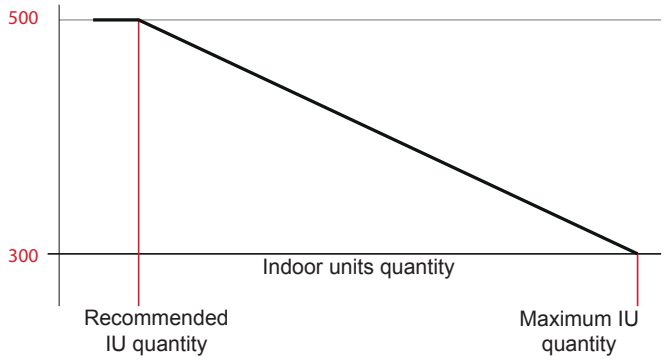

- *Make sure to calculate a lineal proportion when working out intermediate cases. In case the total pipe length is longer than 300m, capacity may drop progressively as a result of heat loss through the pipes.*

8.2.3 Pipe branching restrictions (Installation with Main Piping Branch)

Unlimited number of Main Piping Branches as long as the following restrictions are respected.
In the case that the piping length L2 from the multi-kit at the first branch to the farthest indoor unit is over 40m, follow the instructions below when performing the field-supplied piping work.

Example 1: Installation with Main Piping Branch

Piping length from the multi-kit at the first branch to the terminal Indoor Units is within 40-90 m

1 In the case that the piping length L2 is over 40m, the diameter size of gas and liquid lines “b and c” or “g and h” should be increased by one size with reducers (field-supplied).
   - If (a) is one size smaller than (b, c) after increasing the size, increase the size of (a) to the same size as (b, c)
   - If (a) is two sizes smaller than (b,g) after increasing the size, increase (a) one size and reduce (b, g) one size to be the same size.
2 The difference between the piping length from the first branch to the farthest indoor unit and the piping length from the first branch to the closest indoor unit must be within 40m.
   - (L2.1) - (L1.2) ≤40m
   - (L2.2) - (L1.1) ≤40m

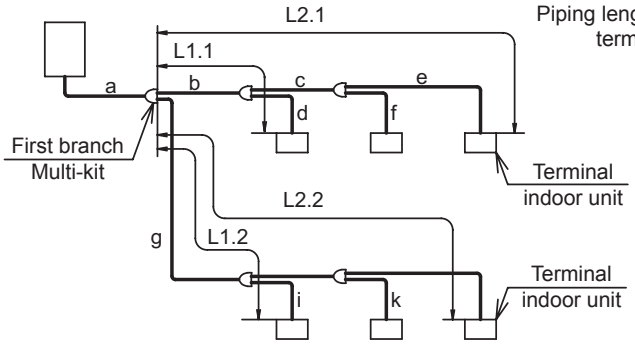

Piping length from the multi-kit at the branch to the terminal Indoor Unit is within 40~90 m

L1.1	(b+d)
L1.2	(g+i)
L2.1	(b+c+e)
L2.2	(g+h+j)

L1.1 / L1.2	The closest Indoor unit from the first branch
L2.1 / L2.2	The farthest indoor unit from the first branch

NOTE

Main Piping Branch: Both of the pipes branched from multi-kit are connected to a further Multi-kit.

Example 2: Installation without Main Piping Branch

Piping length from the multi-kit at the first branch to the terminal Indoor units is within 40-90 m

1 In the case that the piping length L2 is over 40m, the diameter size of gas and liquid lines “b, d and f” should be increased by one size with reducers (field-supplied).
   - If (a) is smaller than (b) after increasing the size, increase the size of (a) to the same size as (b).

Piping length from the multi-kit at the branch to the terminal Indoor Unit is whitin 40~90 m

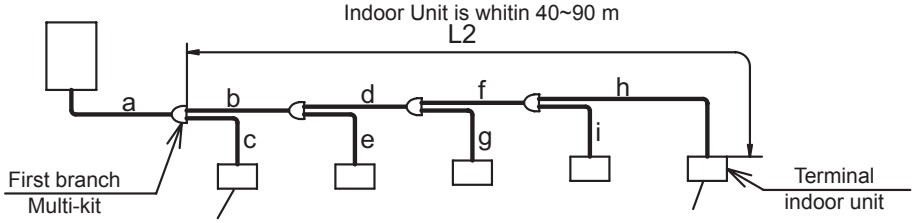

The closest Indoor unit from the first branch The farthest indoor unit from the first branch

◆ Heat pump system (with header branches)

Header branch can be used with line branch. Header branch can also be used after the second branch. Do not connect a line branch to a header branch. When using header branch, make sure that the piping length L2 from the multi-kit at the first branch to the farthest indoor unit is within 40m.

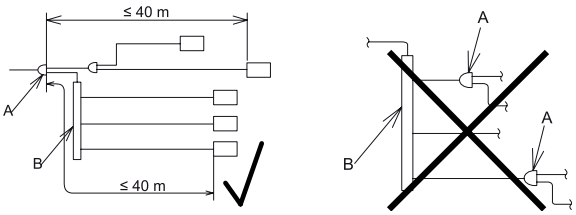

A	Line branch
B	Distributor (header branch)

Connect Wall Type (RPK-FSNH4M Series) with expansion valve kit

Outdoor unit	Total length between each I.U. and expansion valve kit (m)
RAS-(4-6)FS(V)NME	30
RAS-(8/10)FSXNME	40
RAS-12FSXNME	60

8.2.4 Piping work for CH-Box CH-AP(160/280)SSX

Refrigerant piping size depends on the combinations with the outdoor unit. Refer to the technical documentation for the outdoor unit. Perform piping work for the CH-Box according to the following figure.

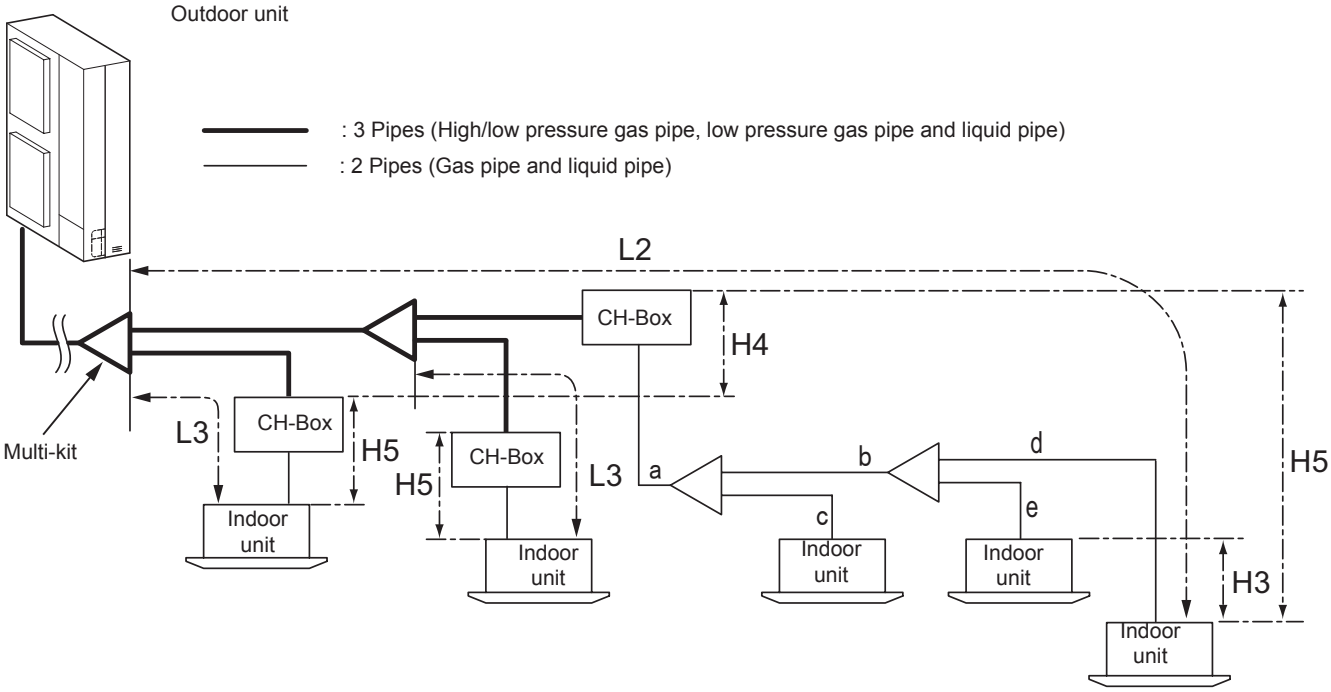

Item		Mark	Allowable Piping Length
Piping Length	Maximum Piping Length between multi-kit of 1st Branch and Terminal Indoor Unit	L2	≤ 90m (1*)
	Maximum Piping Length between Each multi-kit and Each Indoor Unit	L3	≤ 40m (2*)
	In Case there is Branch after CH-Box, Total Piping Length from CH-Box to Each Connected Indoor Unit per Branch	a+b+c+d+e	≤ 40m
Height Difference	Height Difference between Indoor Units Connected to Same CH-Box	H3	< 4m
	Height Difference between CH-Boxes	H4	< 15m
	Height Difference between CH-Box and Indoor Unit	H5	(*)

NOTE

- *(*)When the height difference between CH-Box and indoor unit is long, the performance may decrease. (Recommended piping length: within 15m).*
- (1*) *When the piping length from the multi-kit to the first branch and to the terminal indoor unit exceeds 40m, there are restrictions. Refer to the technical documentation for the outdoor unit.*
- (2*) *If the piping length (L3) between each multi-kit and indoor unit is considerably longer than other indoor unit, refrigerant may not flow well, and may lessen the unit's performance compared to other models. (Recommended piping length: within 15m).*

8.2.4.1 Piping connection

Perform the piping connection according to the table below.

Connected Indoor Unit Capacity: Q (HP)	CH-AP160SSX
Q ≤ 2.3	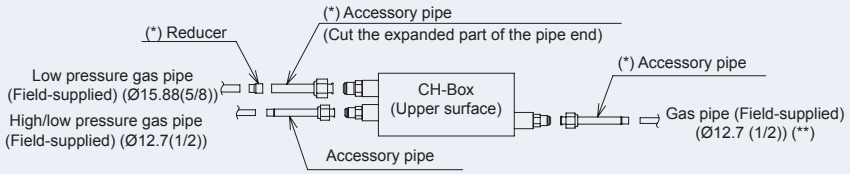
2.5 < Q < 6.0	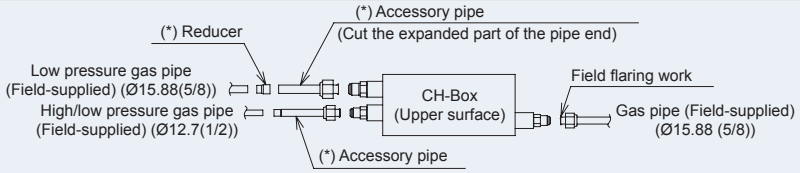
Q = 6.0	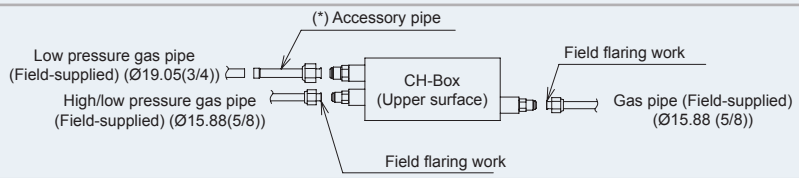

Connected Indoor Unit Capacity: Q (HP)	CH-AP280SSX
6.0 < Q ≤ 8.0	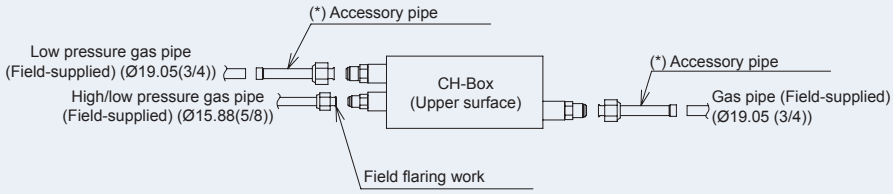
8.0 < Q ≤ 10.0	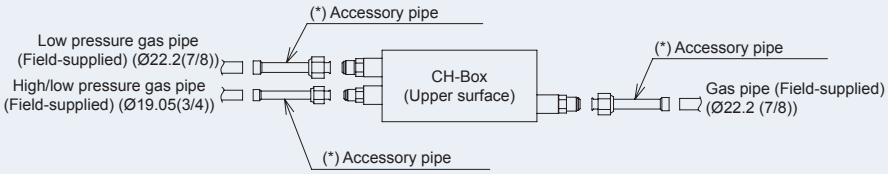

NOTE

- *(*) Factory-supplied accessories.*
- *Refer to the technical documentation for the outdoor unit for the following piping size:*
  - *Upstream piping of CH-Box*
  - *Downstream piping of CH-Box when the branch is located downstream of CH-Box.*
- *(**)Ø12.7 pipe connection is not available in some indoor unit types, and ø15.88 pipes must be used instead. Make sure to check the indoor unit specifications.*

8.2.4.2 Piping insulation

CH-AP160SSX	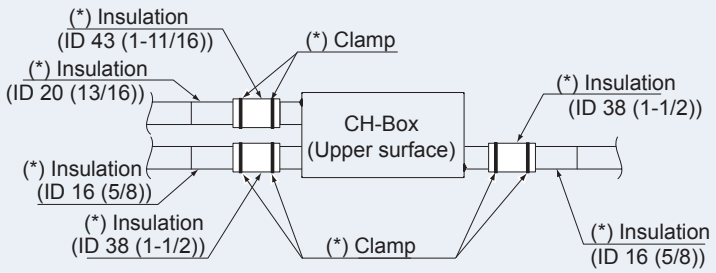
CH-AP280SSX	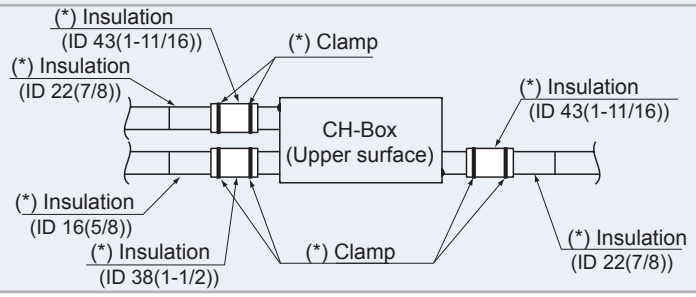

NOTE

- *(*) Factory-supplied accessories.*
- *When the humidity inside the ceiling is high, apply additional insulation to the flare nut connection.*

8.2.5 Piping work for CH-Box CH-AP(04-16)MSSX

Refrigerant piping size depends on the combinations with the outdoor unit. Refer to the technical documentation for the outdoor unit. Perform piping work for the CH-Box according to the following figure.

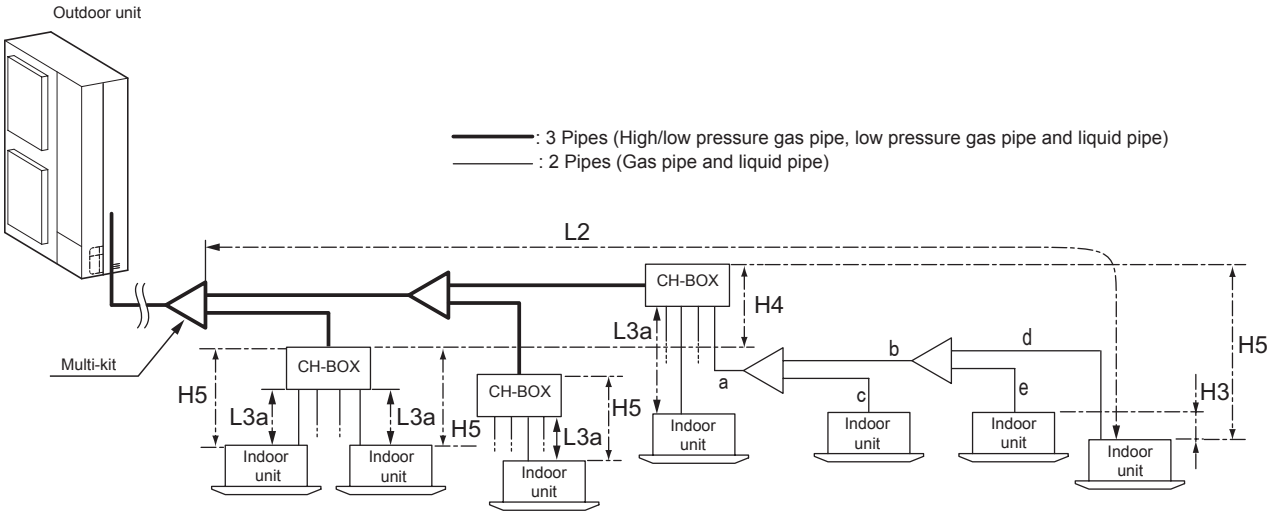

Item		Mark	Allowable Piping Length
Piping Length	Maximum Piping Length between multi-kit of 1st Branch and Terminal Indoor Unit	L2	≤ 90m (1*)
	Maximum Piping Length between Each multi-kit and Each Indoor Unit	L3a, a+b+d, a+b+e or a+c	≤ 40m (2*)
	In Case there is Branch after CH-Box, Total Piping Length from CH-Box to Each Connected Indoor Unit per Branch	a+b+c+d+e	≤ 40m
Height Difference	In case there is branch after CH-Box, height difference between indoor units connected to same connection port of CH-Box	H3	< 4m
	Height Difference between CH-Boxes	H4	< 15m
	Height Difference between CH-Box and Indoor Unit	H5	(*)

NOTE

- *(*)Recommended height difference between CH-Box and indoor unit is within 15m. If the height difference exceed this value, it may cause a decrease of operating performance.*
- (1*)*When the piping length from the multi-kit to the first branch and to the terminal indoor unit exceeds 40m, there are restrictions. Refer to the technical documentation for the outdoor unit.*
- (2*)*If the piping length (L3a) between each CH-Box and indoor unit is considerably longer than other indoor unit, refrigerant may not flow well, and may lessen the unit's performance compared to other models. (Recommended piping length: within 15m)*

8.2.5.1 Selecting Piping Size

- Select the size for the high/low pressure gas pipe, low pressure gas pipe and liquid pipe according to the table A. The size depends on the indoor unit total capacity connected downstream of the CH-Box.
- As for the multi-kit branch or header branch, refer to Technical Catalogue for outdoor unit.
- Perform the piping connection work for the CH-Box as shown below.

◆ **Outdoor unit side field piping size:**

Connected Indoor Unit Capacity: Q	Low Pressure Gas pipe (A)	High/Low Pressure Gas pipe (B)	Liquid pipe (C)
HP	mm (inch)	mm (inch)	mm (inch)
<6	Ø15.88 (5/8)	Ø12.7 (1/2)	Ø9.52 (3/8)
6 ≤ Q ≤ 8.99	Ø19.05 (3/4)	Ø15.88 (5/8)	Ø9.52 (3/8)
9 ≤ Q ≤ 11.99	Ø22.2 (7/8)	Ø19.05 (3/4)	Ø9.52 (3/8)
12 ≤ Q ≤ 15.99	Ø25.4 (1)	Ø22.2 (7/8)	Ø12.7 (1/2)
16 ≤ Q ≤ 17.99	Ø28.58 (1-1/8)	Ø22.2 (7/8)	Ø12.7 (1/2)
18 ≤ Q ≤ 21.99	Ø28.58 (1-1/8)	Ø22.2 (7/8)	Ø15.88 (5/8)
22 ≤ Q ≤ 25.99	Ø28.58 (1-1/8)	Ø25.4 (1)	Ø15.88 (5/8)
26 ≤ Q ≤ 35.99	Ø31.75 (1-1/4)	Ø28.58 (1-1/8)	Ø19.05 (3/4)

Table A

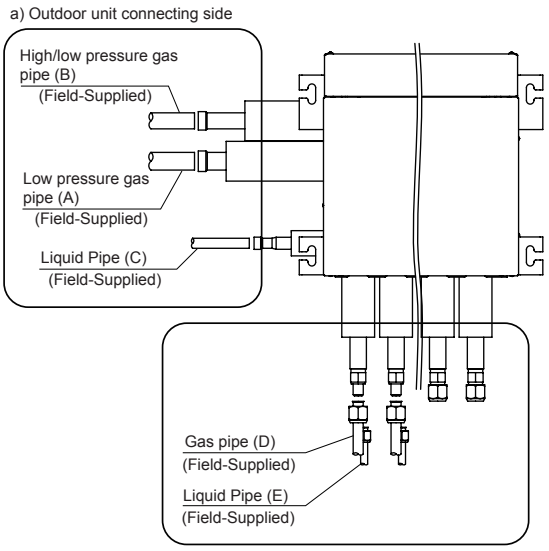

Details of changes to the piping size for connection to the CH-Box are shown below.

CH-AP04MSSX

Unit: mm

	Piping Connection Size for CH-Box	Required Pipe Size	Field-Supplied	Remarks
Low Pressure Gas Pipe (A)	Ø25.4 (1)	Ø19.05 (3/4)	OD25.4 (1) → ID19.05 (3/4)	Apply Field-Supplied Reducer (2 Size Down)
		Ø22.2 (7/8)	OD25.4 (1) → ID22.2 (7/8)	Apply Field-Supplied Reducer
		Ø25.4 (1)	-	-
		Ø28.58 (1-1/8)	OD25.4 (1) → ID28.58 (1-1/8)	Apply Field-Supplied Reducer
High/Low Pressure Gas Pipe (B)	Ø22.2 (7/8)	Ø12.7 (1/2)	OD22.2 (7/8) → ID12.7 (1/2)	Apply Field-Supplied Reducer (3 Size Down)
		Ø15.88 (5/8)	OD22.2 (7/8) → ID15.88 (5/8)	Apply Field-Supplied Reducer (2 Size Down)
		Ø19.05 (3/4)	OD22.2 (7/8) → ID19.05 (3/4)	Apply Field-Supplied Reducer
		Ø22.2 (7/8)	-	-
Liquid Pipe (C)	Ø12.7 (1/2)	Ø9.52 (3/8)	OD12.7 (1/2) → ID9.52 (3/8)	Apply Field-Supplied Reducer
		Ø12.7 (1/2)	-	-

CH-AP08MSSX

Unit: mm (inch)

	Piping Connection Size for CH-Box	Required Pipe Size	Field-Supplied	Remarks
Low Pressure Gas Pipe (A)	Ø28.58 (1-1/8)	Ø19.05 (3/4)	OD28.58 (1-1/8) → ID19.05 (3/4)	Apply Field-Supplied Reducer (2 Size Down)
		Ø22.2 (7/8)	OD28.58 (1-1/8) → ID22.2 (7/8)	Apply Field-Supplied Reducer (2 Size Down)
		Ø25.4 (1)	OD28.58 (1-1/8) → ID25.4 (1)	Apply Field-Supplied Reducer
		Ø28.58 (1-1/8)	-	-
		Ø34.93 (1-3/8)	OD28.58 (1-1/8) → ID34.93 (1-3/8)	Apply Field-Supplied Reducer
High/Low Pressure Gas Pipe (B)	Ø22.2 (7/8)	Ø15.88 (5/8)	OD22.2 (7/8) → ID15.88 (5/8)	Apply Field-Supplied Reducer (2 Size Down)
		Ø19.05 (3/4)	OD22.2 (7/8) → ID19.05 (3/4)	Apply Field-Supplied Reducer
		Ø22.2 (7/8)	-	-
		Ø25.4 (1)	OD22.2 (7/8) → ID25.4 (1)	Apply Field-Supplied Reducer
		Ø28.58 (1-1/8)	OD22.2 (7/8) → ID28.58 (1-1/8)	Apply Field-Supplied Reducer (2 Size Up)
Liquid Pipe (C)	Ø12.7 (1/2)	Ø9.52 (3/8)	OD12.7 (1/2) → ID9.52 (3/8)	Apply Field-Supplied Reducer
		Ø12.7 (1/2)	-	-
		Ø15.88 (5/8)	OD12.7 (1/2) → ID15.88 (5/8)	Apply Field-Supplied Reducer
		Ø19.05 (3/4)	OD12.7 (1/2) → ID19.05 (3/4)	Apply Field-Supplied Reducer (2 Size Up)

CH-AP12MSSX

Unit: mm (inch)

	Piping Connection Size for CH-Box	Required Pipe Size	Field-Supplied	Remarks
Low Pressure Gas Pipe (A)	Ø28.58 (1-1/8)	Ø22.2 (7/8)	OD28.58 (1-1/8) → ID22.2 (7/8)	Apply Field-Supplied Reducer (2 Size Down)
		Ø25.4 (1)	OD28.58 (1-1/8) → ID25.4 (1)	Apply Field-Supplied Reducer
		Ø28.58 (1-1/8)	-	-
		Ø34.93 (1-3/8)	OD28.58 (1-1/8) → ID34.93 (1-3/8)	Apply Field-Supplied Reducer
High/Low Pressure Gas Pipe (B)	Ø25.4 (1)	Ø19.05 (3/4)	OD25.4 (1) → ID19.05 (3/4)	Apply Field-Supplied Reducer (2 Size Down)
		Ø22.2 (7/8)	OD25.4 (1) → ID22.2 (7/8)	Apply Field-Supplied Reducer
		Ø25.4 (1)	-	-
		Ø28.58 (1-1/8)	OD25.4 (1) → ID28.58 (1-1/8)	Apply Field-Supplied Reducer
Liquid Pipe (C)	Ø15.88 (5/8)	Ø9.52 (3/8)	OD15.88 (5/8) → ID9.52 (3/8)	Apply Field-Supplied Reducer (2 Size Down)
		Ø12.7 (1/2)	OD15.88 (5/8) → ID12.7 (1/2)	Apply Field-Supplied Reducer
		Ø15.88 (5/8)	-	-
		Ø19.05 (3/4)	OD15.88 (5/8) → ID19.05 (3/4)	Apply Field-Supplied Reducer

CH-AP16MSSX

Unit: mm (inch)

	Piping Connection Size for CH-Box	Required Pipe Size	Field-Supplied	Remarks
Low Pressure Gas Pipe (A)	Ø31.75 (1-1/4)	Ø22.2 (7/8)	OD31.75 (1-1/4) → ID22.2 (7/8)	Apply Field-Supplied Reducer (3 Size Down)
		Ø25.4 (1)	OD31.75 (1-1/4) → ID25.4 (1)	Apply Field-Supplied Reducer (2 Size Down)
		Ø28.58 (1-1/8)	OD31.75 (1-1/4) → ID28.58 (1-1/8)-	Apply Field-Supplied Reducer
		Ø31.75 (1-1/4)	-	-
High/Low Pressure Gas Pipe (B)	Ø28.58 (1-1/8)	Ø19.05 (3/4)	OD28.58 (1-1/8) → ID19.05 (3/4)	Apply Field-Supplied Reducer (3 Size Down)
		Ø22.2 (7/8)	OD28.58 (1-1/8) → ID22.2 (7/8)	Apply Field-Supplied Reducer (2 Size Down)
		Ø25.4 (1)	OD28.58 (1-1/8) → ID25.4 (1)	Apply Field-Supplied Reducer
		Ø28.58 (1-1/8)	-	-
Liquid Pipe (C)	Ø19.05 (3/4)	Ø9.52 (3/8)	OD19.05 (3/4) → ID9.52 (3/8)	Apply Field-Supplied Reducer (3 Size Down)
		Ø12.7 (1/2)	OD19.05 (3/4) → ID12.7 (1/2)	Apply Field-Supplied Reducer (2 Size Down)
		Ø15.88 (5/8)	OD19.05 (3/4) → ID15.88 (5/8)	Apply Field-Supplied Reducer
		Ø19.05 (3/4)	-	-

◆ Indoor unit side field piping size

- When a branch is located downstream of the CH-Box

Connected Indoor Unit Capacity: Q	Gas pipe (D)	Liquid pipe (E)
HP	mm (inch)	mm (inch)
Q < 6	Ø15.88 (5/8)(*)	Ø9.52 (3/8)(*)
Q = 6	Ø19.05 (3/4)	Ø9.52 (3/8)(*)

NOTE

- *(*)Field flaring work is required.*
- *When connecting the Gas Pipe (D) and Liquid Pipe (E), reuse the flare nut attached to the CH-Box.*
- *When the connected indoor unit capacity is 6.3kW or less and the piping length exceeds 15m, use 9.52mm (3/8 inch) for the liquid pipe.*

When a branch is not located downstream of the CH-Box

Connected Indoor Unit Capacity: (Q)	Gas pipe (D)	Liquid pipe (E)	Remarks
kW	mm	mm	
Q ≤ 2.3	Ø12.7 (1/2) (**)	Ø6.35 (1/4)	Use accessory pipe on gas pipe side and accessory pipe on liquid pipe side to decrease the pipe size.
2.5 ≤ Q ≤ 6.0	Ø15.88 (5/8)(*)	Ø9.52 (3/8)(*)	-
Q = 8.0	Ø19.05 (3/4)	Ø9.52 (3/8)(*)	Use accessory pipe on gas pipe side to increase the pipe size.
Q = 10.0	Ø22.2 (7/8)	Ø9.52 (3/8)(*)	Use accessory pipe on gas pipe side to increase the pipe size.

NOTE

- *(*) Field flaring work is required.*
- *(**) Ø12.7 pipe connection is not available in some indoor unit types, and ø15.88 pipes must be used instead. Make sure to check the indoor unit specifications.*
- *When connecting the Gas Pipe (D) and Liquid Pipe (E), reuse the flare nut attached to the CH-Box.*
- *When the connected indoor unit capacity is 6.3 kW or less and the piping length exceeds 15m, use 9.52 mm (3/8 inch) for the liquid pipe.*

CAUTION

In case the piping connection is not used for the indoor unit side piping connection, it must be sealed using the closed flare nut originally attached. These flare nuts have been tightened by torque specifications shown below before shipping. Ensure that they are sealed completely.

- Tightening torque for flare nut before shipping.

Item	Tightening Torque
Gas Pipe Flare Nut	75+7 Nm (55.3+5 ft/lbs)
Liquid Pipe Flare Nut	38+4 Nm (28.0+3 ft/lbs)

1 In case of 8 and 10HP type indoor unit connection:
   - Up to two 8 and 10HP type indoor units can be connected to the CH-Box within the “Maximum otal Capacity of All Connected Indoor Units”.
   - Make sure to increase the pipe connection size by using the appropriate accessory pipe.

2 In case of 8 and 10HP type indoor unit connection:
   - Only single unit per branch is allowed to be connected.

3 In case the number of indoor unit connection is less and the piping connections are left over:
   - Unused piping connections must be sealed using the closed flare nut originally attached.
   - It is unnecessary to attach closed-end piping.
   - Refrigerant leakage is caused by loosened flare nuts.
   - Ensure that they are sealed completely.
   - Use specified tightening torque according to the table “Tightening Torque for Flare Nut before shipping” above.
   - Any piping connections can be left over.

4 In case there is plan for additional indoor units in the future:
- Do not plan the piping size for additional indoor units. Ensure to select the piping again in the future.
- Additional indoor units can be connected only after the refrigerant is recovered.

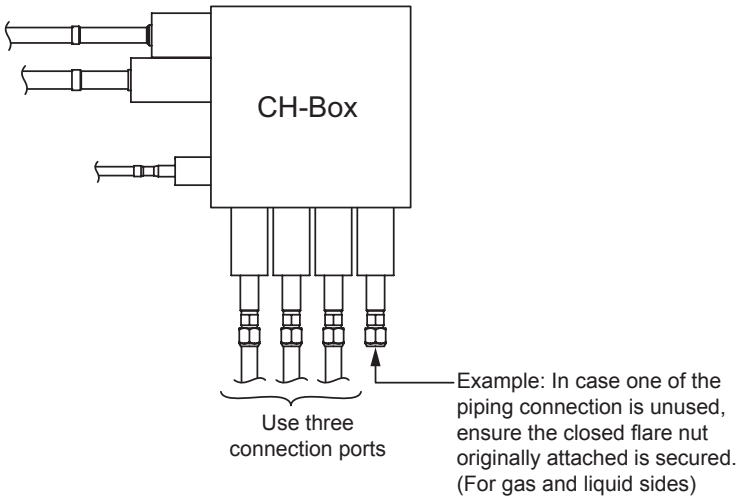

Above figure illustrate the example of CH-AP04MSSX

8.2.5.2 Piping insulation

1 After the air-tight leakage test, perform insulation work as shown below.

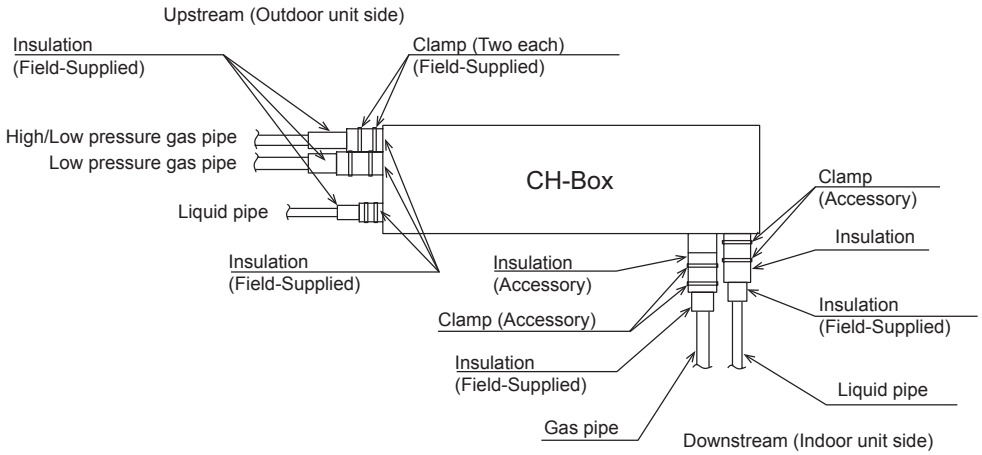

2 Insulate gas and liquid pipe separately using the accessory insulation material. In the event that temperature and humidity levels inside the ceiling exceed 30 ºC / RH, relative humidity 80%, apply additional insulation materials (approximately 10mm (3/8 inch) thickness) to the surface of the accessory insulation material to avoid condensation.

3 Perform cold insulation work by insulating and taping the flare connection and reducer connection. Also insulate all the refrigerant pipes.

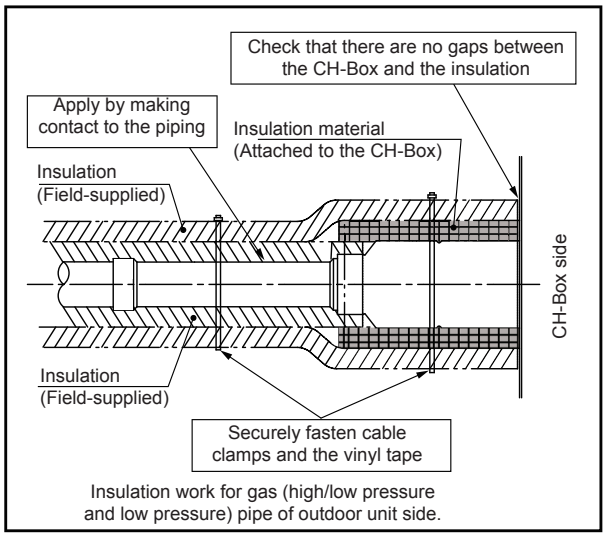

Insulation work for gas (high/low pressure and low pressure) pipe of outdoor unit side.

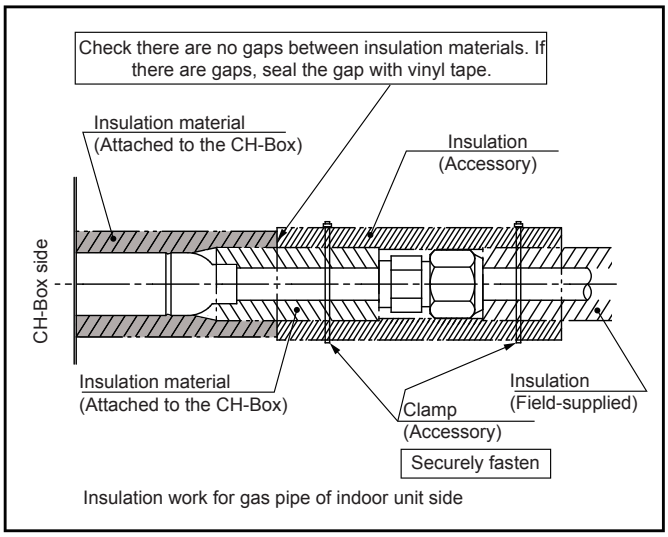

Insulation work for gas pipe of indoor unit side

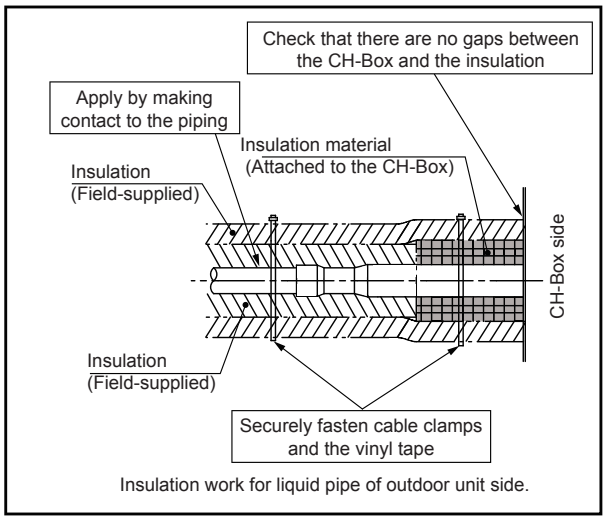

Insulation work for liquid pipe of outdoor unit side.

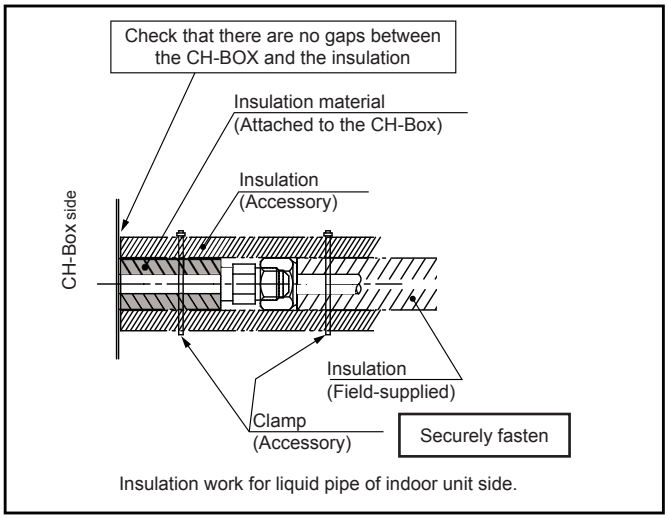

Insulation work for liquid pipe of indoor unit side.

4 In case there are unused piping connection, ensure to apply accessory insulation material to the piping and flare connections without gaps as shown on the right figure. (For gas and liquid sides)

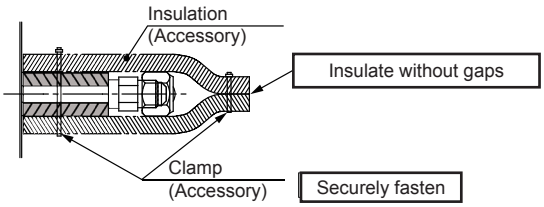

8.3 Vaccum pumping

◆ Basic Method

- Connect the gauge manifold using charging hoses with a vacuum pump or a nitrogen cylinder to the check joints of the liquid line and the gas line stop valve.
- Check for any gas leakage at the flare nut connection, by using nitrogen gas to increase the pressure at 4.15 MPa for outdoor units inside of the field-supplied piping.
- Connect a manifold gauge and vacuum pump to the check joints.

	SIDE FLOW VRF (4-6 HP)	SIDE FLOW VRF (8-12 HP)
Heat pump system	Gas stop valve Liquid stop valve	High/low pressure gas stop valve Liquid stop valve
Heat recovery system		High/low pressure gas stop valve Low pressure gas stop valve Liquid stop valve

- Continue vacuum pumping work until the pressure reaches -0.1MPa (-756mmHg) or lower for one to two hours.
- After vacuum pumping work, stop the vacuum pumping and leave the gauge for one hour. Check to ensure that the pressure in the manifold gauge does not increase.
- If the pressure inside the gauge does not mantain -0.1MPa (-756mmHg), it is considered that there is a gas leakage. Check for any gas leakage once again.
- If no leakage exists, operate the vacuum pumping for one to two hours. If moisture remains inside the pipes, the compressor may be damaged.
- Tighten the caps of check joint according to the specified torque after the vacuum pumping work.

NOTE

- *This system is only for the refrigerant R410A. The manifold gauge and the charging hose should be exclusive use for R410A.*
- *If tools or measuring instruments come into contact with the refrigerant, use the tools or the measuring instruments exclusively for R410A.*
- *DO NOT perform vacuuming pumping work with valves of the outdoor units open. Otherwise, the refrigerant charged before shipment may leak and it may result in failure.*
- *When the spindle cap for stop valve is removed, the gas accumulated at O-ring or screws is released and may make sound. This phenomenon is NOT a gas leakage.*
- *If vacuum degree of -0.1 MPa (-756 mmHg) is not available, it is considered of gas leakage or entering moisture. Check for any gas leakage once again. If no leakage exists, operate the vacuum pump for more than one to two hours.*
- *Insulate the liquid pipe for prevention of the capacity decrease according to the ambient air conditions and the dewing on the pipe surface by the low pressure.*

DANGER

Only use nitrogen gas when testing for leaks. Never use oxygen, acetylene or fluorocarbon gas; these could result in an intoxication or explosion. Apply a maximum pressure of 4.15 MPa of nitrogen gas to the installation.

◆ Triple Evacuation Method

According to the following [Step 1] [Step 2] [Step 3] in order, conduct vacuum drying work.

[Step 1]

1 Vacuum until the pressure reaches 2000 microns (2.0 mmHg).
2 Pressurize with nitrogen up to 0.3 MPaG (50 PSIG) for 15 minutes.
3 Release pressure to atmosphere level as less than 0.03 MPaG (5 PSIG).

[Step 2]

1 Vacuum until the pressure reaches 1000 microns (1.0 mmHg).
2 Pressurize with nitrogen up to 0.3 MPaG (50 PSIG) for 15 minutes.
3 Release pressure to atmosphere level as less than 0.03 MPaG (5 PSIG).

[Step 3]

1 Vacuum until the pressure reaches 500 microns (0.5 mmHg).
2 Stop vacuum pump.
3 Check that the vacuum 500 microns (0.5 mmHG) can maintain for one hour.

NOTE

- *If tool or measuring instruments come into contact with the refrigerant, use the tools or the measuring instruments exclusively for R410A.*
- *Do not perform vacuuming pumping work with valves of the outdoor units open. Otherwise, the refrigerant charged before shipment may leak and it may result in failure. If moisture remains inside the pipes, the compressor may be damaged.*

8.4 Refrigerant charge

DANGER

Use refrigerant R410A in the refrigerant cycle. Do not charge oxygen, acetylene or other flammable and poisonous gases into the refrigerant cycle when performing a leakage test or an air-tigh test. These types of gases are extremely dangerous and can cause an explosion. It is recommended that compressed air, nitrogen or refrigerant be used for these types of test.

After vacuum pumping work, keep the gas valve and liquid valve fully closed. Check if the system needs an additional charge of refrigeration. If the total refrigerant amount of the system is insufficient, charge the additional refrigerant, which amount is calculated, from the check joint of the liquid valve. (Additional refrigerant tolerance shall be +0.5 kg.) according to follows:

- Fully open the gas valve.
- For charging refrigerant, connect the gauge manifold using charging hoses with a refrigerant charging cylinder to the check joint of the liquid line stop valve.
- Charge the proper quantity of refrigerant according to the piping length (Calculate the quantity of the refrigerant charge).
- Charged quantity needs to be controlled by a weighing equipment
- Charge refrigerant by opening the gauge manifold valve. Charge the required refrigerant by operating the system in cooling.
- With the gas line stop valve fully open, slightly open the liquid line stop valve.perate the compressor at the cooling mode. At this time, liquid valve is slightly opened. Continue cooling operation for more than 10 minutes to circulate the refrigerant.
- Fully open the gas valve and liquid valve.
- If the total refrigerant amount is excessive or insufficient, the compressor will be damaged.
- Be sure to charge the refrigerant in the liquid condition.
- The additional refrigerant charge must be performed from the check joint of the liquid valve. If the additional refrigerant is charged from the check joint of the gas valve, the compressor will be damaged.
- Insulate the liquid pipe for prevention of the capacity decrease according to the ambient air conditions and the dewing on the pipe surface by the low pressure. Insulate the flare nut and union of the piping connection.
- Check for refrigerant leakage in detail to ensure that there is no gas leakage. When large amount of the refrigerant leaks, the troubles as follows may occur.
  - Oxygen Deficiency. it will cause difficulty with breathing or harmful gases would occur.
  - Generation of Harmful Gas Due to Chemical Reaction with fire.
- An excess or a shortage of refrigerant is the main cause of trouble to the units. Charge the correct refrigerant quantity according to the description of label at the inside of service cover.
- Never use the refrigerant charged in the outdoor unit for air purging. If used, insufficient refrigerant will lead to failure.

CAUTION

- *If the total refrigerant amount is excessive or insufficient, the compressor will be damaged.*
- *Be sure to charge the refrigerant in the liquid condition.*
- *The additional refrigerant charge must be performed from the check joint of the liquid valve. If the additional refrigerant is charged from the check joint of the gas valve, the compressor will be damaged.*
- *Insulate the liquid pipe for prevention of the capacity decrease according to the ambient air conditions and the dewing on the pipe surface by the low pressure. Insulate the flare nut and union of the piping connection.*
- *Check for refrigerant leakage in detail to ensure that there is no gas leakage. When large amount of the refrigerant leaks, the troubles as follows may occur.*
  - *Oxygen Deficiency. it will cause difficulty with breathing or harmful gases would occur.*
  - *Generation of Harmful Gas Due to Chemical Reaction with fire.*
- *An excess or a shortage of refrigerant is the main cause of trouble to the units. Charge the correct refrigerant quantity according to the description of label at the inside of service cover.*
- *Never use the refrigerant charged in the outdoor unit for air purging. If used, insufficient refrigerant will lead to failure.*

◆ **SET FREE mini heat recovery system (example)**

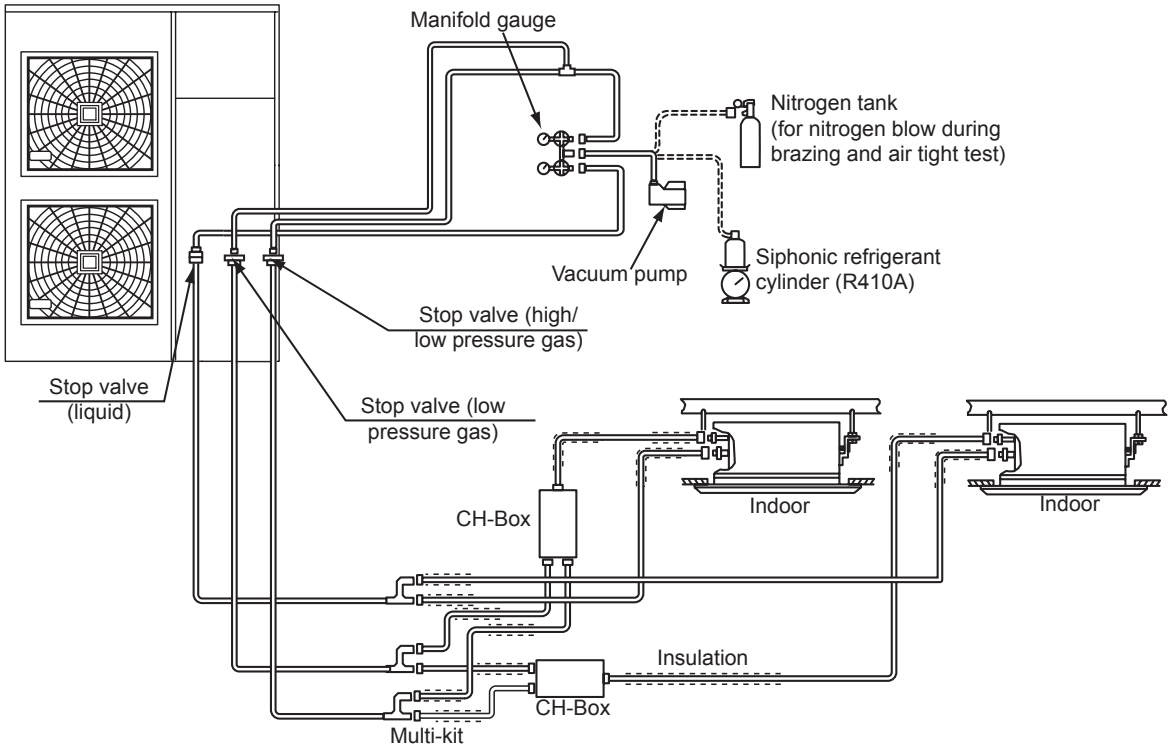

NOTE

- *Only tools and indicators specifically for use with R410A refrigerant gas should be used.*
- *Do not open the stop valves on the outdoor unit.*

8.5 Additional refrigerant charge calculation

Although refrigerant has been charged into this unit in advance (W0 (kg)), additional refrigerant charge (W (kg)) is required according to piping length.

Ensure that the total additional refrigerant charge quantity should not exceed the max. additional charge quantity shown in the table below.

Outdoor unit	Refrigerant charge before shipment (W0 (kg))	Maximum additional charge (kg)
RAS-4FS(V)NME	3.7	9.3
RAS-5FS(V)NME	3.7	9.3
RAS-6FS(V)NME	4.1	8.9
RAS-8FSXNME	4.2	26.1
RAS-10FSXNME	5.5	26.1
RAS-12FSXNME	5.5	26.1

NOTE

- *When the total length of the refrigerant pipes exceeds 300 m, the maximum additional refrigerant charge is restricted.*
- *The total additional charge (refrigerant pipes + indoor units) must not exceed the maximum additional refrigerant charge indicated in the table before*
- *Allowable total piping length may become shorter than 1,000 m due to the limitation of maximum additional refrigerant amount:*

Determine the additional refrigerant quantity according to the following procedure, and charge the system with it. Record the additional refrigerant quantity to facilitate maintenance and servicing activities thereafter.

8.5.1 For RAS-(4-6)FS(V)NME

Pipe diameter (mm)	Total piping length (m)	Refrigerant amount for 1m pipe (kg/m)	Additional charge (kg)
∅12.70	m	× 0.085 =	=_____kg
∅9.52	m	× 0.050 =	=_____kg
∅6.35	m	× 0.020 =	=_____kg
Total additional charge for liquid piping =			=_____kg

◆ **Total refrigerant charge in the system**

Total refrigerant charge = W + W_0

8.5.2 For RAS-(8-12)FSXNME

◆ **W1. For liquid piping (W1 kg)**

Pipe diameter (mm)	Total piping length (m)	Refrigerant amount for 1m pipe (kg/m)	Additional charge (kg)
∅15.88	m	× 0.17 =	=_____kg
∅12.70	m	× 0.11 =	=_____kg
∅9.52	m	× 0.056 =	=_____kg
∅6.35		× 0.024 =	=_____kg
Total additional charge for liquid piping =			=_____kg

NOTE

In the case that the quantity calculated above is less than the minimum quantity indicated in the table below, adopt the quantity in the table below as the additional refrigerant quantity for piping liquid, regardless of the piping length.

RAS-(8-12)FSXNME	Minimum Additional Refrigerant Charge of Base Unit = 2.0 kg

◆ **W2 For indoor unit (W2 kg)**

Depending on the number of connected indoor units, select the refrigerant quantity from the following table:

Indoor Unit Capacity (HP)	0.4 - 1.0	1.5 - 6.0
Additional Refrigerant Charge (kg)	0.3	0.5

Maximum additional refrigerant charge must not exceed 6.0kg.

Nº of IU x 0.3 kg/unit or 0.5 kg/unit = additional charge (W2 kg) ≤ 6.0 kg

◆ **W3. For indoor unit 8HP and 10HP only (W3 kg)**

Additional refrigerant charge is 1kg/unit of 8HP and 10HP indoor units.

Nº of 8HP and 10HP IU x 1.0 kg/unit.= Additional charge (W3 kg)

◆ **W4. For indoor unit (W4 kg)**

Depending on the ratio of the indoor unit connection capacity.

IU Capacity Ratio is ≤ 100% = 0.0kg

IU Capacity Ratio is > 100% = 0.5kg.

◆ **W5. For each CH-Box connected (W5 kg)**

If CH-Boxes (multiple branch type only) are connected, additional refrigerant charge is required. Select adequate refrigerant charge from the following table.

CH-Box Model	CH-AP04MSSX	CH-AP08MSSX	CH-AP12MSSX	CH-AP16MSSX
Additional Refrigerant Charge (kg)	0.1	0.2	0.3	0.4

◆ **W**

Calculation of additional charge (W kg) = W1 + W2 + W3 +W4 (Only heat pump)

Calculation of additional charge (W kg) = W1 + W2 + W3 +W4 + W5 (Only heat recovery)

NOTE

- *Check that the total additional refrigerant charge is not greater than the values given in "Maximum additional refrigerant charge"*
- *Some refrigerant charge calculations differ when installing Wall Type (RPK Series) with the expansion valve kit. Refer to the RPK technical information.*

Additional Refrigerant Calculation for Wall Type (RPK-FSNH4M Series)

The additional refrigerant calculation for Wall Type (RPK-FSNH4M Series) with the expansion valve kit is as follows. Refer to the item "Calculating method of additional refrigerant charge W1".

1 Firstly calculate the additional refrigerant amount for the liquid pipe between multi-kit and the expansion valve kit according to the piping length and diameter.

2 Then, calculate the additional refrigerant amount for the liquid pipe between indoor unit and the expansion valve kit (Pipe diameter: 6.35. Refrigerant amount for 1m pipe: 0.011kg/m).

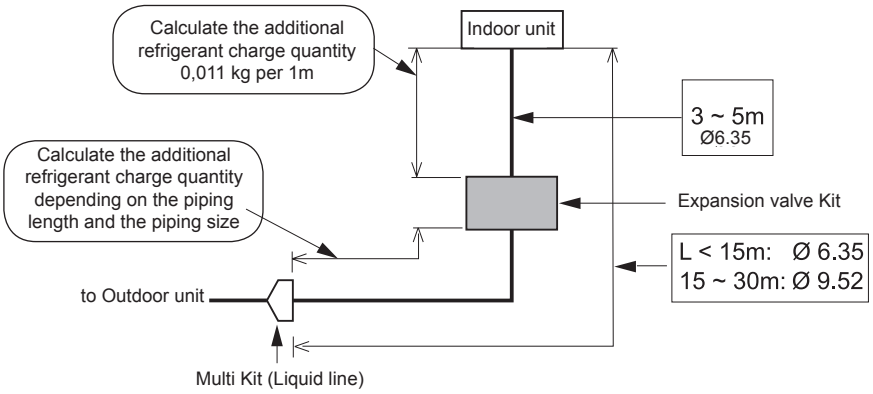

NOTE

Check the installation limits and restrictions.

8.6 Precautions in the event of refrigerant leaks

DANGER

- ***Fitters and the designers of the installations must strictly observe local and national legislation, and local codes regarding safety requirements in the event of refrigerant leaks.***
- ***The following standards may be applicable, if local regulations are not available. International Organization for Standardization, ISO5149 or European Standard, EN378***

8.6.1 Maximum permitted concentration of hydrofluorocarbon (HFC)

The R410A refrigerant gas, used in the equipment, is fireproof and non-toxic.

The maximum permissible concentration of HFC R410A gas in the air is 0.44 kg/m^3, according to Standard EN378-1. Consequently, effective measures must be adopted to maintain the concentration of R410A gas in the air below 0.44kg/m^3 in case of leakage.

DANGER

In the event of a leak, the gas will spread around the room, displacing the air, and could therefore result in asphyxia.

NOTE

Before the indoor unit installation, confirm that the room can keep the lower gas concentration than the limit value in order to take the emergency countermeasures even if the gas leakage is occurred.

8.6.2 Calculation of the refrigerant leakage

1 Calculate the total quantity of refrigerant *R* (kg) charged in the system. To do so, connect all the indoor units of the rooms in which you wish to have air conditioning.

2 Calculate the volume *V* (m^3) of each room.

3 Calculate the refrigerant concentration *C* (kg/m^3) of the room in accordance with the following formula:

$$R / V = C$$

R: total quantity of refrigerant charged (kg).
V: volume of the room (m^3).
C: concentration of refrigerant (≤ 0.44 kg/m^3 for R410A gas).

8.6.3 Countermeasures in the event of refrigerant leaks

The room should have the following characteristics in case of a leak of refrigerant:

1 Opening without shutter to permit the circulation of fresh air in the room.
2 Opening without door measuring 0.15%, or greater, of the floor surface.
3 A fan with a capacity of at least 0.4 m^3/minute per Japanese tonne of refrigeration (= volume displaced by the compressor / 5.7 m^3/h) or greater, connected to a gas sensor in the air conditioning system which uses the refrigerant.

◆ **Japanesse tonne of refrigeration table**

Model	Refrigerating Tons	Model	Refrigerating Tons
RAS-4FS(V)NME	3.05	RAS-8FSXNME	3.08
RAS-5FS(V)NME	3.34	RAS-10FSXNME	3.69
RAS-6FS(V)NME	3.34	RAS-12FSXNME	4.52

DANGER

Special attention should be given to areas where the refrigerant may be deposited and stay in the room, such as basements or similar, as it is heavier than air.

8.7 Drain kit components

The drain boss is for the drain pipe connection in order to use outdoor unit bottom base as a drain pan.

Quantity

Model	OUTDOOR	Q´ty
DBS-26	RAS-(4-6)FS(V)NME	1
	RAS-(8-12)FSXNME	2

Drain water treatment

Drain water is discharged during heating and defrosting operation (rain is also discharged).

CAUTION

- *Choose a place where well drainage is available or provide a drain ditch.*
- *Do not install the unit over the walkways. Condensation water may fall on people. In case of installing the unit in such a place, provide the additional drain pan.*
- *Do not use the drain boss in the cold area. The drain water in the drain pipe may be frozen and then the drain pipe may crack.*

HITACHI

9. Electrical wiring

Index

9.1 General information 98

9.2 General verifications 98

9.3 Setting of the DSW 99

9.4 DSW setting for outdoor unit 99

9.4.1 RAS-(4-6)FSVNME 99

9.4.2 RAS-(4-6)FSNME 100

9.4.3 RAS-(8-12)FSXNME 102

9.5 Outdoor and indoor units electrical settings 104

9.5.1 Connection in outdoor unit 104

9.5.2 Connection of indoor units 106

9.6 Connection of the power supply circuits 109

9.6.1 Cable sizes 109

9.6.2 Main breaker switch 109

9.6.3 Electromagnetic compatibility 110

9.7 CH-Box electrical wiring and settings 111

9.7.1 CH-Box CH-AP(160/280)SSX 111

9.7.2 CH-Box CH-AP(04-16)MSSX 112

9.1 General information

NOTE

- *Use twist pair wire (more than 0.75 mm²) for operation wiring between outdoor unit and indoor unit, and operation wiring between indoor unit and indoor unit.(Do not use wire with more than 3 cores).*
- *H-LINK twist pair shielded cable must be grounded in the outdoor unit side.*
- *Use shielded wires for intermediate wiring to protect the units from noise obstacle at length of less than 300 m and size complied with local code.*

CAUTION

- *Before any work to the electrical wiring or regular inspections, switch off the mains power supply of the indoor and outdoor units. Wait three minutes before starting installation or maintenance work.*
- *Make sure that the interior and exterior fans have come to a complete standstill before starting work on the electrical wiring or regular inspections.*
- *Protect cables, the drainage pipe, electrical components, etc. from rodents and insects; otherwise these might damage unprotected components and this could result in fire.*
- *Do not allow cables to come into contact with the refrigerant pipes, metal edges, printed circuit boards (PCB) or the electric components inside the unit; the cables may be damaged and this could result in fire.*
- *Firmly secure the cables inside the indoor unit with plastic flanges.*
- *Connecting the operating line cables incorrectly may lead to faults in the PCB.*
- *Secure the cable of the remote control switch with the cord clamp inside the electrical box.*
- *Before starting work on the installation of the outdoor unit, set the DSW required to supply voltage in the correct position.*

DANGER

- ***Do not connect or adjust any wiring or connections unless the main power switch is OFF. Check and test to ensure that if there is more than one source of power supply, all are turned OFF.***
- ***Use an earth leakage breaker with medium sensitivity, and an activation speed of 0.1 or less. If this is not fitted, there is a risk of electric shock and/or fire.***
- ***Install an earth leakage breaker, fuse or circuit breaker of the specific capacity for each outdoor unit power line. Not fitting it may cause an electric shock or fire.***
- ***Check that the earth wire is securely connected, tagged and locked in accordance with national and local codes.***

9.2 General verifications

1 Make sure the electric components supplied by the installer (main power switches, circuit breakers, wires, connectors and connection terminals) have been selected correctly in line with the electrical data given.

   a. The electricity supply to the unit should be via an exclusive power control switch and protective circuit breaker, certified and installed in accordance with local or national safety regulations.

   b. The electricity supply for the outdoor and indoor units should be separate. Connect the voltage supply wiring for each group of indoor units to the same outdoor unit (maximum capacity for each group of indoor units: 26 HP).

   c. For heat recovery systems, the CH-Box and the indoor unit of the same refrigerant cycle can be supplied from the same mains power supply.

2 Check that the supply voltage is between 90 and 110% of the rated voltage. Where the voltage capacity is too low, it will not be possible to start the system due to the drop in voltage.

3 Sometimes, the refrigeration/heating system is not able to operate correctly in the following cases:

   - When the system is supplied from the same supply line as other major consumers (heavy machinery, power inverter systems, cranes, welding machinery, etc).
   - When the supply cables of the major consumers and the refrigeration/heating system are very close together.

   In these cases, induction in the wiring to the refrigeration/heating system may arise due to a rapid change in the electricity consumption of the above consumers and their start-up. Therefore before starting installation work, check the regulations and standards concerning adequate protection of the power supply line.

NOTE

For further information, please refer to the applicable legislation in the country in which the unit is to be fitted.

4 During the preliminary preparation work of the electricity supply line for the unit, the provisions in local and national legislation must never be violated.

5 Check that the earth cable is correctly connected.

DANGER

- ***Never connect the earth cable to the refrigerant pipes. The gas in the pipes could cause a fire.***
- ***Do not connect the earth cable to the lighting arrest system. The electrical potential of earth would increase abnormally.***

9.3 Setting of the DSW

Location of the DSW on PCB.

RAS-(4-6)FSVNME (PCB2)	RAS-(4-6)FSNME (PCB1)	RAS-(8-12)FSXNME (PCB1)
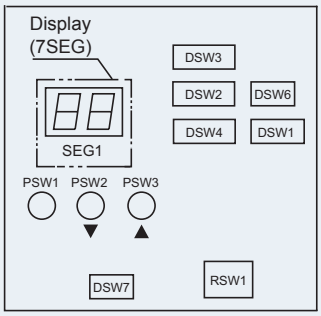	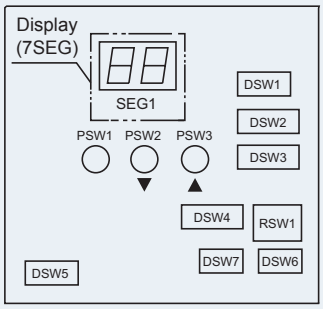	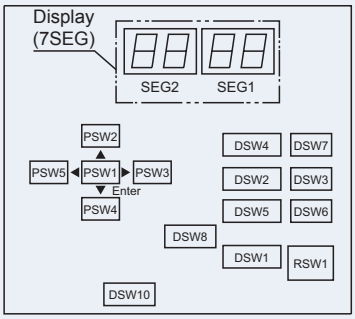
DSW1 and PSW can be operated while power source is ON. *It may take up to 20 seconds for the change of operation state (RUN/STOP) to be effective after having set DSW1.*		*DSW4, 5, 8 and PSW can be operated while power source is ON.* *It may take up to 20 seconds for the change of operation state (RUN/STOP) to be effective after having set DSW4.*

CAUTION

Before changing the settings of the DSWs, the voltage supply should be disconnected. Otherwise, the new settings will not be valid.

9.4 DSW setting for outdoor unit

NOTE

The symbol "■" indicates the position of the DSWs. The figures show the position of the DSWs once the position setting has been completed.

9.4.1 RAS-(4-6)FSVNME

◆ PCB1

DSW1

Setting not required
(not used)

Factory setting

DSW5 transmission setting
Setting not required

Factory setting	End resistance cancellation

◆ PCB2

DSW1 test run

Setting required

Factory setting	Cooling test run	Heating test run	Forced compressor stoppage	Heating intermediate test run	Cooling intermediate test run
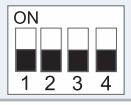	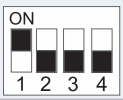	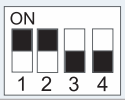	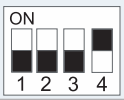	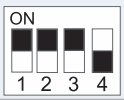	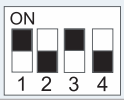

DSW2 pipe length

Setting required

Factory setting	Pipe length shorter than 5m	Pipe length longer than 30m	Control supporting existing piping	Function selection setting mode	External input,output setting mode
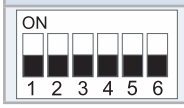	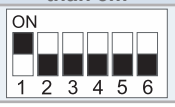	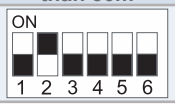	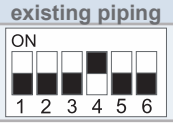	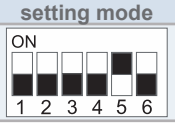	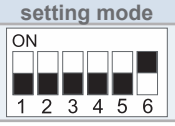

DSW3 supply voltage and system setting

Setting not required

4HP 1-phase	5HP 1-phase	6HP 1-phase
	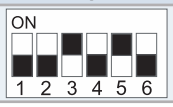	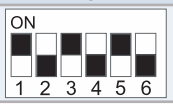

DSW4 / RSW1 refrigerant system setting

Setting required

Set all the IU and the OU belonging to the same refrigerant cycle with the same cycle number.

Factory setting		Setting example	
Tens	Units	Refrigerant cycle nº 25	
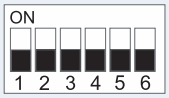	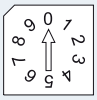	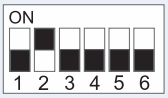	

NOTE

Maximum refrigerant cycle number setting: 63.

DSW6 function selection

Setting not required

Factory setting	Fixed value setting mode (used in combination with DSW2- 5)

DSW7

Setting not required (not used)

Factory setting

9.4.2 RAS-(4-6)FSNME

◆ PCB1

DSW1 test run

Setting required

Factory setting	Cooling test run	Heating test run	Forced compressor stoppage	Heating intermediate test run	Cooling intermediate test run
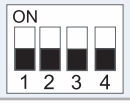	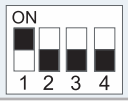	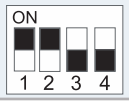	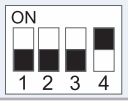	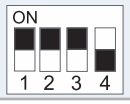	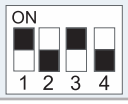

DSW2 pipe length

Setting required

Factory setting	Pipe length shorter than 5m	Pipe length longer than 30m	Control supporting existing piping	Function selection setting mode	External input,output setting mode
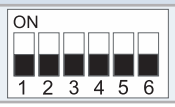	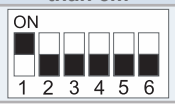	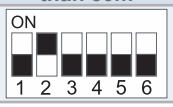	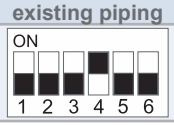	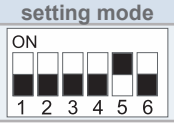	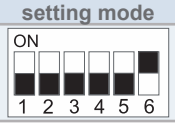

DSW3 supply voltage and system setting

Setting not required

4HP 3-phase	5HP 3-phase	6HP 3-phase
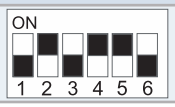	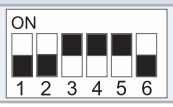	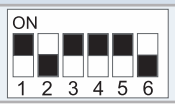

DSW4 / RSW1 refrigerant system setting

Setting required

Set all the IU and the OU belonging to the same refrigerant cycle with the same cycle number.

Factory setting		Setting example	
Tens	Units	Refrigerant cycle nº 25	
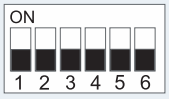	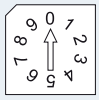	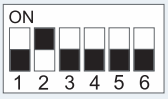	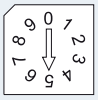

NOTE

Maximum refrigerant cycle number setting: 63.

DSW5 transmission setting

Setting not required

Factory setting	End resistance cancellation

DSW6 function selection

Setting not required

Factory setting	Fixed value setting mode (used in combination with DSW2- 5)

DSW7

Setting not required
(not used)

Factory setting

SW1

Setting not required

Only RAS-(4-6)FSNME (not used)

Factory setting

◆ PCB2

DSW1

Setting not required (not used)

Factory setting
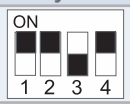

9.4.3 RAS-(8-12)FSXNME

◆ PCB1

DSW1: refrigerant system setting

Setting required

Set all the IU and the OU belonging to the same refrigerant cycle with the same cycle number.

Factory setting		Setting example	
Tens	Units	Refrigerant cycle nº 25	
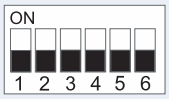			

NOTE

Maximum refrigerant cycle number setting: 63.

DSW2 capacity setting

Setting not required

8HP	10HP	12HP
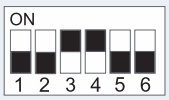	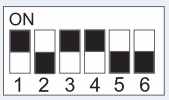	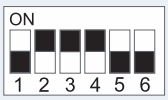

DSW3

Setting not required

NOTE

Do not change DSW3 setting. Otherwise, it may cause abnormal operation.

Factory setting

DSW4 test run and service settings

Setting required

Factory setting	Forced compressor stoppage	External input / output setting	Cooling test run	Heating test run	Function setting
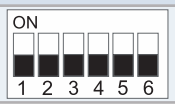	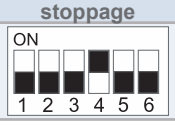	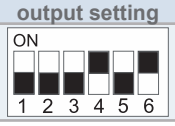	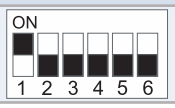	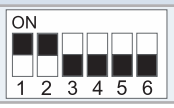	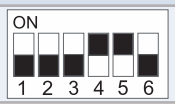

DSW5

Setting not required

Factory setting
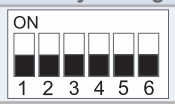

DSW6 function setting (low ambient setting)

Setting required

Factory setting	Cooling operation under low load operation

NOTE

Make sure to apply snow protection hood.

DSW7 supply voltage and system setting

Setting required

Factory setting (400 V) (Heat recovery system)	Heat pump system
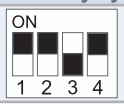	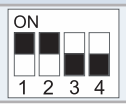

DSW8 high static pressure mode setting

Setting required

Factory setting	HSP setting

NOTE

When adopting the air outlet duct (field-supplied), make sure to set DSW8.

DSW10 transmission setting

Setting required

Factory setting	End resistance cancellation	Fuse recovery (*1)
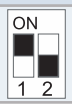		

NOTE

*(*1) If the fuse (EF1) is melted, set Nº.2 pin to ON for recovery.*

◆ PCB2

DSW101

Setting required

INV1	Cancellation of current detection
Factory setting	
	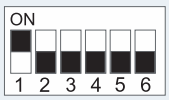

NOTE

If cancellation of current detection is set, make sure to return the setting, after service works.

9.5 Outdoor and indoor units electrical settings

9.5.1 Connection in outdoor unit

Remove cover to the refrigerant pipes.

The power and transmission cables should be inserted through one of the unit pre-drilled holes and lower rubber bushing provided, using a different protective duct for each one. Seal the access of the pipes and the wiring to the unit, to prevent the entrance of water, rodents and dirt.

Do not allow the cables to touch the refrigerant pipes, sharp metal edges or electric parts from inside the unit.

NOTE

- *Do not insert the supply and communication cables together through the same protective duct. Keep a minimum distance between them of 50 mm.*
- *Secure the rubber bushes with adhesive when the outdoor unit ducts are not used.*
- *Fasten the power cables with the flanges provided inside the unit.*
- *Attach unused rubber bushings with adhesive.*
- *Make a drainage hole in the lowest part of the protective duct.*

◆ **RAS-(4-6)FS(V)NME**

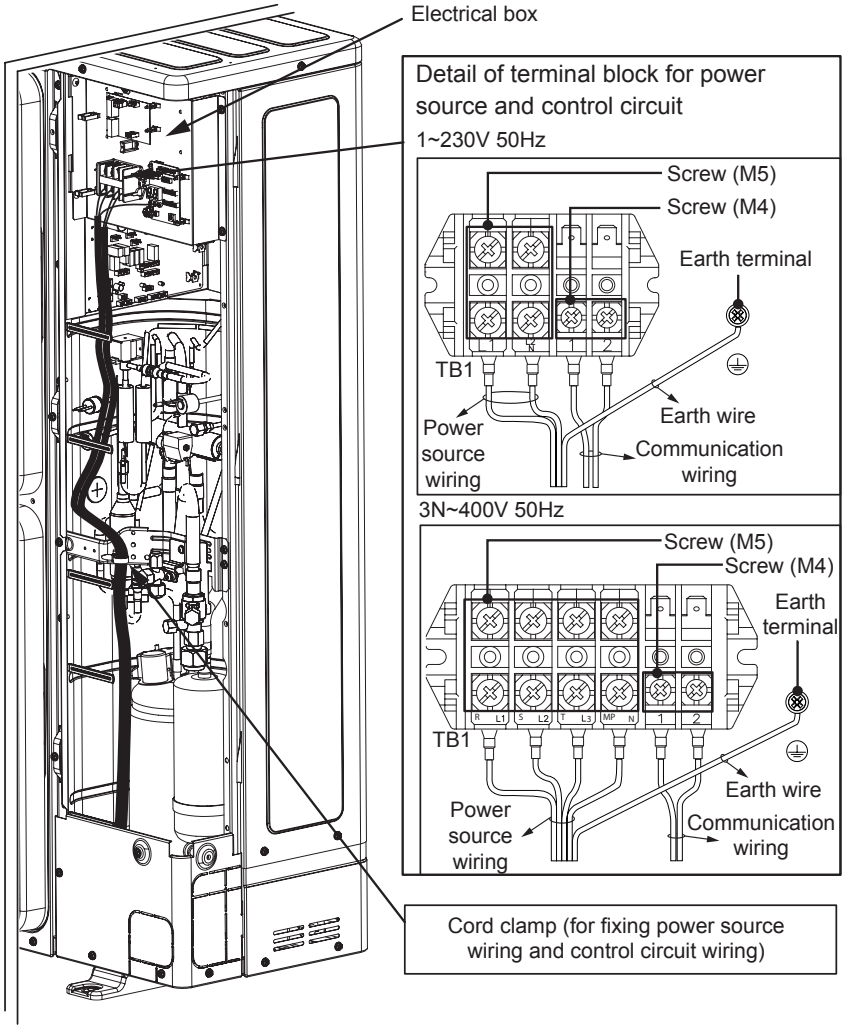

Connect the mono-phase power cables on terminals L and N of the TB1 terminal board and connect the earth wire to the screw-in terminal. Use insulated terminals or heat-shrink covers.

From the indoor units to the outdoor unit: terminals 1 and 2 of the TB1.

Connect the three-phase power cables on terminals L1, L2, L3 and N of the TB1 terminal board and connect the earth wire to the screw-in terminal. Use insulated terminals or heat-shrink covers.

From the indoor units to the outdoor unit: terminals 1 and 2 of the TB1.

◆ RAS-(8-12)FSXNME

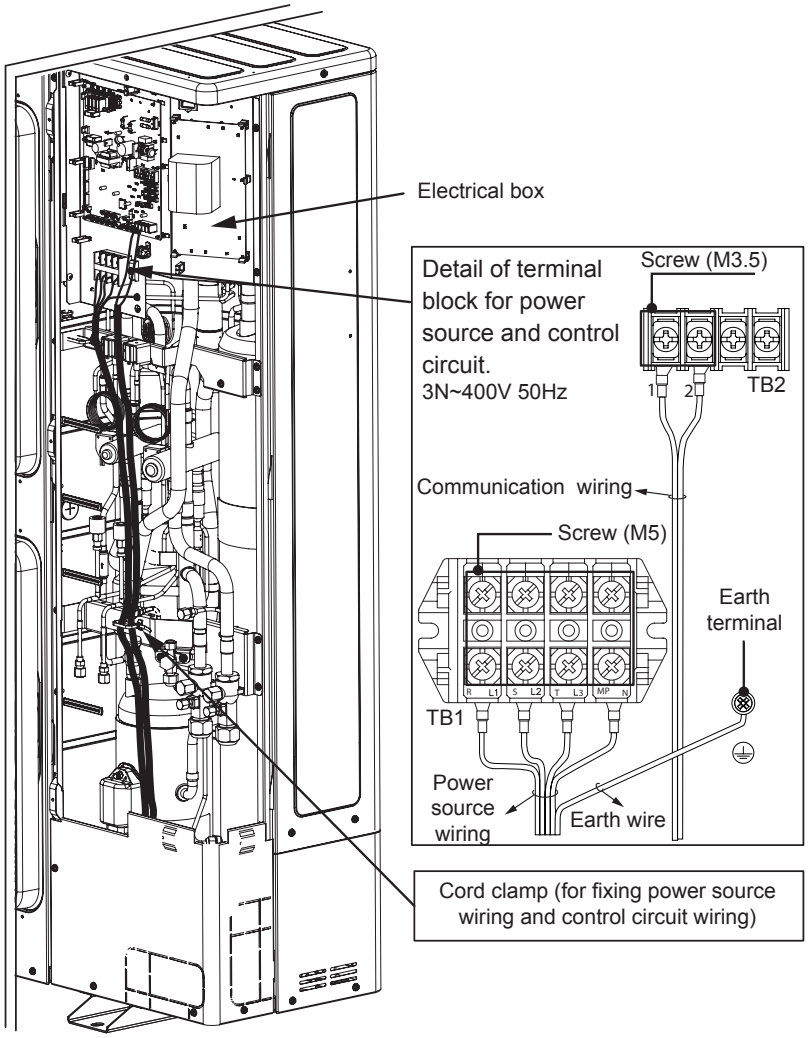

Connect the three-phase power cables on terminals L1, L2, L3 and N of the TB1 terminal board and connect the earth wire to the screw-in terminal. Use insulated terminals or heat-shrink covers.

From the indoor units to the outdoor unit connect the communication cables on the terminals 1 and 2 of the TB2 (PCB1):

NOTE

Completely seal the entrance to the duct using sealant, etc. to prevent water from entering.

Tighten the connection terminals as shown in the following table:

Size	Tightening torque (Nm)
M3.5	(0.75-0.97)
M4	(1.0–1.3)
M5	(2.0–2.5)

9.5.2 Connection of indoor units

Connect outdoor unit to a power supply line. Install an earth leakage breaker, fuse and circuit breaker for the outdoor unit power line.

Connect the group of indoor units to the outdoor unit to a voltage supply line (maximum capacity for each group of indoor units: 15.6 HP). Install an earth leakage breaker, fuse and circuit breaker for each group of indoor units.

Connect the communication cable between the indoor units, the CH-Boxes and the outdoor unit.

Connect the communication cable on the corresponding units to the same refrigerant cycle. (Where the refrigerant pipe of the indoor unit is connected to the outdoor unit, connect the communication cable to the same indoor unit).

NOTE

Connecting the refrigerant pipe and the communication cable to units in different refrigerant cycles may lead to operating problems.

Use shielded twisted pair cable or shielded pair cable. Do not use cable with three or more conductors.

Use the same type of cables for the H-LINK system of units in each refrigerant cycle.

Ensure a minimum distance of 50 mm between the power cables and the communication cables and 1500 mm between these and the power cables of other electrical devices. Where this is not possible, install power cables in a metal duct separate from the others.

Connect the communication cables to the corresponding TB terminals depending on the outdoor unit:

- Between the outdoor unit and the indoor unit.
- Between the outdoor unit and the CH-Box.
- Between the outdoor unit and the indoor unit on other refrigerant cycles.

CAUTION

- *For RAS-(8-12)FSXNME do not connect power cables to communication terminals (TB2). This could damage the circuit board.*
- *For heat recovery systems, connect the communication cable on the indoor unit (used exclusively for refrigeration) to TB2 terminals 1 and 2 on the CH-Box.*

Connect the earthing cable for the outdoor units, the indoor units and the CH-Boxes. Earthing connections below a resistance of 100 Ω (max.) must be made by skilled personnel.

NOTE

- *Where an alarm is indicated on the display of the outdoor unit, follow the instructions given to make the necessary checks.*
- *Make the function settings from the outdoor unit.*

◆ Connection diagram: heat pump system

Power source from the outdoor unit to the indoor unit

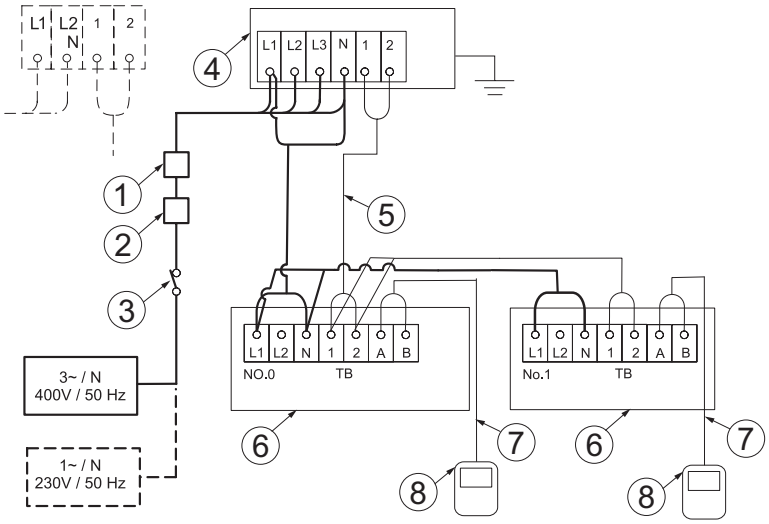

1	ELB (Earth leakage breaker)
2	CB (Circuit breaker)
3	S (Main switch)
4	Outdoor unit
5	Operation wiring (O.U-I.U)
6	Indoor unit
7	Remote control wire (I.U)
8	Remote control (I.U)

Independent power source of outdoor unit and indoor unit

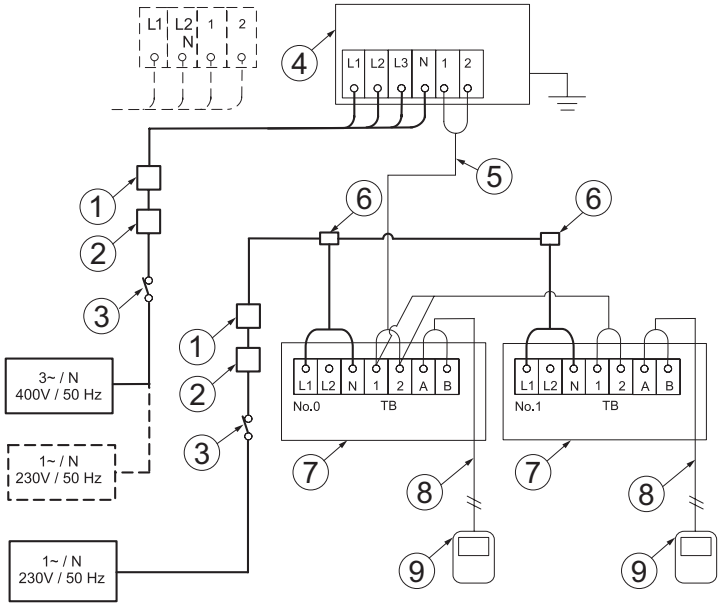

1	ELB (Earth leakage breaker)
2	CB (Circuit breaker)
3	S (Main switch)
4	Outdoor unit
5	Operation wiring (O.U-I.U)
6	Distribution box (field- supplied)
7	Indoor unit
8	Remote control wire (I.U)
9	Remote control (I.U)

◆ Connection diagram: heat recovery system

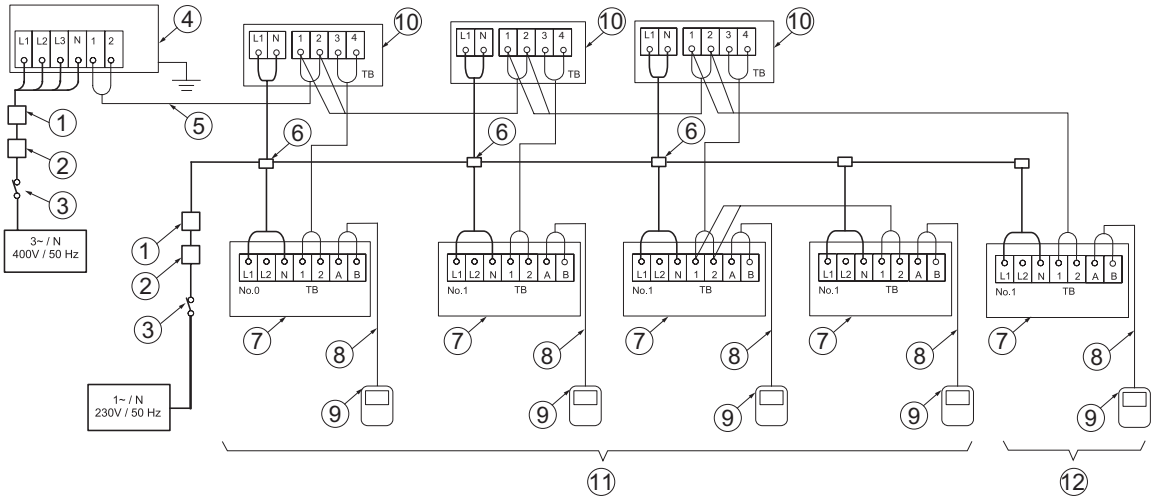

1	ELB (Earth leakage breaker)	7	Indoor unit
2	CB (Circuit breaker)	8	Remote control wire (I.U)
3	S (Main switch)	9	Remote control (I.U)
4	Outdoor unit	10	CH-Box single
5	Operation wiring (O.U-I.U)	11	Indoor unit system No 0
6	Distribution box (field- supplied)	12	Indoor unit system No 1

Detail for CH-Box multi connection

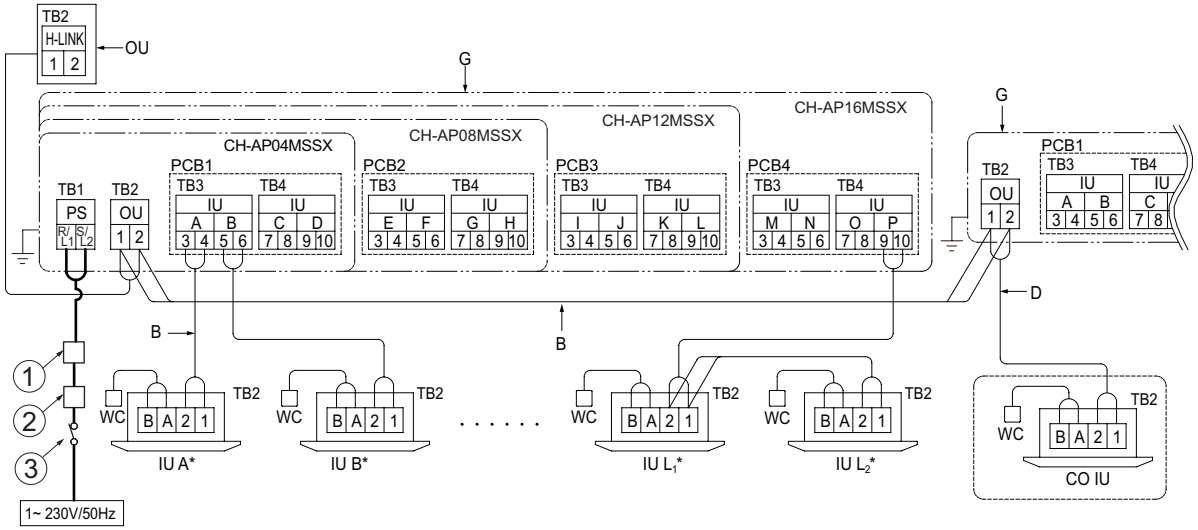

1	ELB (Earth leakage breaker)	G	CH-Box
2	CB (Circuit breaker)	WC	Wired controler
3	S (Main switch)	IU (A-L)*	Indoor unit (A to L indicate the Indoor Unit number)*.
C	Connect communication cable from OU to the TB2 in CH-Box	CO IU	Cooling only indoor unit
D	Connect communication cable from cooling only indoor unit to the outdoor terminal block (TB2) in CH-Box	B	Communication Cable (Non-Polarity)
		OU	Outdoor unit

NOTE

- *When multiple indoor units are connected to the same single CH-Box, they are controlled with the same operation mode.*
- *When multiple indoor units are connected to the same branch of the multi CH-Box, they are controlled with the same operation mode.*
- *Do not apply excessive voltage to the communication cable DC5V (non-polarity) between the outdoor unit and the CH-Box, between the CH-Box and the indoor unit or between CH-Boxes.*
- *Use 2-Conductor shielded communication cable for the communication cable. (Do not use 3-Conductor cable or over.)*
- *Connect the communication cable for the outdoor unit to terminals “1” and “2” on TB2 in the CH-Box.*
- *For a CH-Box in the same refrigerant cycle, an electrical power supply can be supplied by one main switch.*
- *Do not connect the power supply line (1N~230V 50Hz) to the terminal block for transmission line.*
- *Connect the ground wiring for the outdoor/indoor units and CH-Box. When ground resistance is less than 100 ohms, ground wiring work should be performed by the qualified electrician.*
- *Do not run the communication cables along with power supply wirings in the CH-Box. Separate communication cables from the power supply wirings.*

9.6 Connection of the power supply circuits

CAUTION

Check to ensure that the field supplied electrical components (mains power switches, circuit breakers, wires, connectors and wire terminals) have been properly selected according to the electrical data indicated on this chapter and they comply with national and local codes. If it is necessary, contact with your local authority in regards to standards, rules, regulations, etc.

9.6.1 Cable sizes

NOTE

- *(1) The cross-sections of the cable should be selected for the maximum current of the unit, in accordance with European Standard EN60335-1.*
- *Use a shielded cable for the transmitting circuit and connect it to the ground.*
- *Do not use cables that are lighter than the normal flexible coated polychloroprene cable (code H05RN-F).*
- *The total transition wiring length between the indoor unit and the outdoor unit should be less than 1000m and the total transition wiring length between outdoor units should be less than 30m.*

Model	Power source cable size	Transmitting cable size
	EN60335-1 (mm^2) (1)	EN60335-1 (mm^2) (1)
RAS-4FSVNME	6.0	0.75
RAS-5FSVNME	6.0	0.75
RAS-6FSVNME	6.0	0.75
RAS-4FSNME	4.0	0.75
RAS-5FSNME	4.0	0.75
RAS-6FSNME	4.0	0.75
RAS-8FSXNME	4.0	0.75
RAS-10FSXNME	6.0	0.75
RAS-12FSXNME	6.0	0.75

9.6.2 Main breaker switch

CAUTION

- *Ensure specifically that there is an Earth Leakage Breaker (ELB) installed for the units (outdoor and indoor unit).*
- *If the installation is already equipped with an Earth Leakage Breaker (ELB), ensure that its rated current is large enough to hold the current of the units (outdoor and indoor unit).*

NOTE

- *Electric fuses can be used instead of magnetic Circuit Breakers (CB). In that case, select fuses with similar rated values as the CB.*
- *The Earth Leakage Breaker (ELB) mentioned on this manual is also commonly known as Residual Current Device (RCD) or Residual Current Circuit Breaker (RCCB).*
- *The Circuit Breakers (CB) are also known as Thermal-Magnetic Circuit Breakers or just Magnetic Circuit Breakers (MCB).*

Model	Power supply	ELB (poles/A/mA)	CB (A)	Fuse (A)
RAS-4FSVNME	1~ 230V 50Hz	2/40/30	32	32
RAS-5FSVNME		2/40/30	32	32
RAS-6FSVNME		2/40/30	32	32
RAS-4FSNME	3N~ 400V 50Hz	4/40/30	20	20
RAS-5FSNME		4/40/30	20	20
RAS-6FSNME		4/40/30	20	20
RAS-8FSXNME		4/40/30	20	20
RAS-10FSXNME		4/40/30	25	25
RAS-12FSXNME		4/40/30	30	30

ELB: Earth leakage Breaker (field-supplied), CB: circuit breaker (field-supplied). Select the high response type of ELB that acts within 0.1 second.

9.6.3 Electromagnetic compatibility

◆ Flicker

According to Directive 2014/30/EU, relating to electromagnetic compatibility:

Equipment complying with EN61000-3-3:

- RAS-(4-6)FSNME and RAS-(8-12)FSXNME

Model	Z_{max} (Ω)
RAS-(4-6)FSVNME	0.24

◆ Harmonics (Preliminary Data)

Harmonics situation of each model regarding EN 61000-3-2 and EN 61000-3-12 is as follows:

MODELS SITUATION REGARDING EN 61000-3-2 AND EN 61000-3-12 Ssc "xx"	MODELS	Ssc "xx" (KVA)
Complying with EN 61000-3-2 (professional use)	RAS-4FSNME	-
	RAS-5FSNME	-
	RAS-6FSNME	-
Complying with EN 61000-3-12	RAS-4FSVNME	TBC
	RAS-5FSVNME	TBC
	RAS-6FSVNME	TBC
	RAS-8FSXNME	TBC
	RAS-10FSXNME	-
	RAS-12FSXNME	2297

9.7 CH-Box electrical wiring and settings

9.7.1 CH-Box CH-AP(160/280)SSX

◆ Electrical Wiring

The electrical wiring connection for the CH-Box is shown in figure below:

- Turn OFF the main power switch and take off the electrical box cover of CH-Box.
- Connect the power supply wiring to L1 and L2 on the terminal block TB1, and connect ground wiring to the terminals in the electrical box.
- Connect the communication cable to “1”, “2”, “3” and “4” on the terminal block TB2 mounted on PCB1.
- Tightly clamp the wires using the cable clamp inside the electrical box.
- Attach the electrical box cover after completing the wiring work.

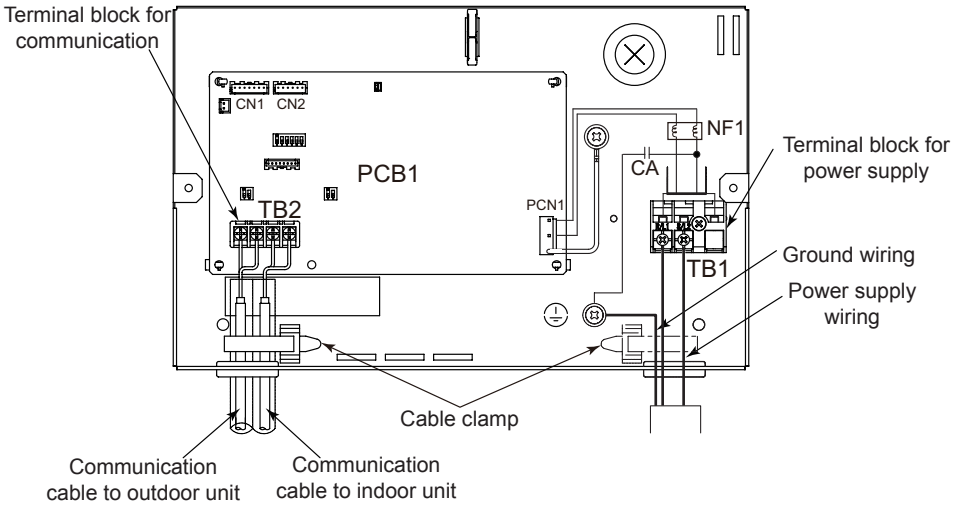

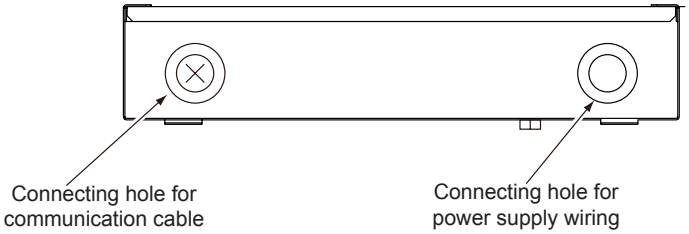

◆ Electrical Wiring Connection

- Perform the electrical wiring work for the CH-Boxes. Select the wire size according to the table below.
- Pay attention to the marks on the terminal block when connecting wires for CH-Box and indoor unit / outdoor unit.

Model	Power Supply	ELB (A/mA)	Earth Wire Size (mm²)	Power Source Cable Size	Transmitting Cable Size	CB (A)	Maximum Current (A)
				EN60 335-1(mm²) *1	EN60 335-1 (mm²)*1		
CH-AP160SSX	1~ 230V 50Hz	15/30	2.0	0.75	0.75	5	0.1
CH-AP280SSX							

NOTE

- *Follow local codes and regulations when selecting field wires.*
- *The wire sizes marked with *1 in the above table are selected at the maximum current of the unit according to the European Standard, EN60335-1. Use the wires which are not lighter than the ordinary tough rubber sheathed flexible cord (code designation H05RN-F) or ordinary polychloroprene sheathed flexible cord (code designation H05RN-F).*
- *Use a shielded cable for the transmitting circuit and connect it to ground.*

◆ Setting of DSW

DSWs on the PCB1 are set before shipping as shown below and no setting is required.

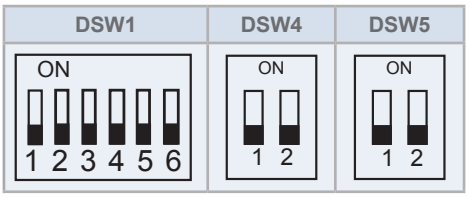

When introducing high voltage to terminals 1 and 2 of TB2, the fuse on the PCB is open. In such a case, first, reconnect the wiring correctly to TB2, and then adjust the number 1 pin to ON for DSW4 and DSW5.

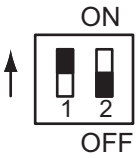

NOTE

- *The "■" mark indicates the position of DSW. Figures show setting before shipment.*
- *All indoor and outdoor units must be shut down prior to attempting to make DSW adjustments, otherwise, the settings will not take effect.*

9.7.2 CH-Box CH-AP(04-16)MSSX

◆ Electrical Wiring

The electrical wiring connection for the CH-Box is shown below.

- Turn OFF the main power switch and take off the electrical box cover of CH-Box.
- Connect the power supply wiring to L1 and L2 on the terminal block TB1, and connect ground wiring to the terminals in the electrical box.
- Connect the communication cable between the outdoor unit and CH-Box to TB2 of the CH-Box. Connect the communication cable between the CH-Box and indoor unit to TB3 and TB4 of the CH-Box. Ensure that the communication cable between the CH-Box and indoor unit is connected to the same letter as piping connection. (Tightening Torque: 1.0 to 1.3 N.m (0.7 to 1.0 ft.lbs)).
- Tightly clamp the wires using the cable clamp inside the electrical box.
- Attach the electrical box cover after completing the wiring work.

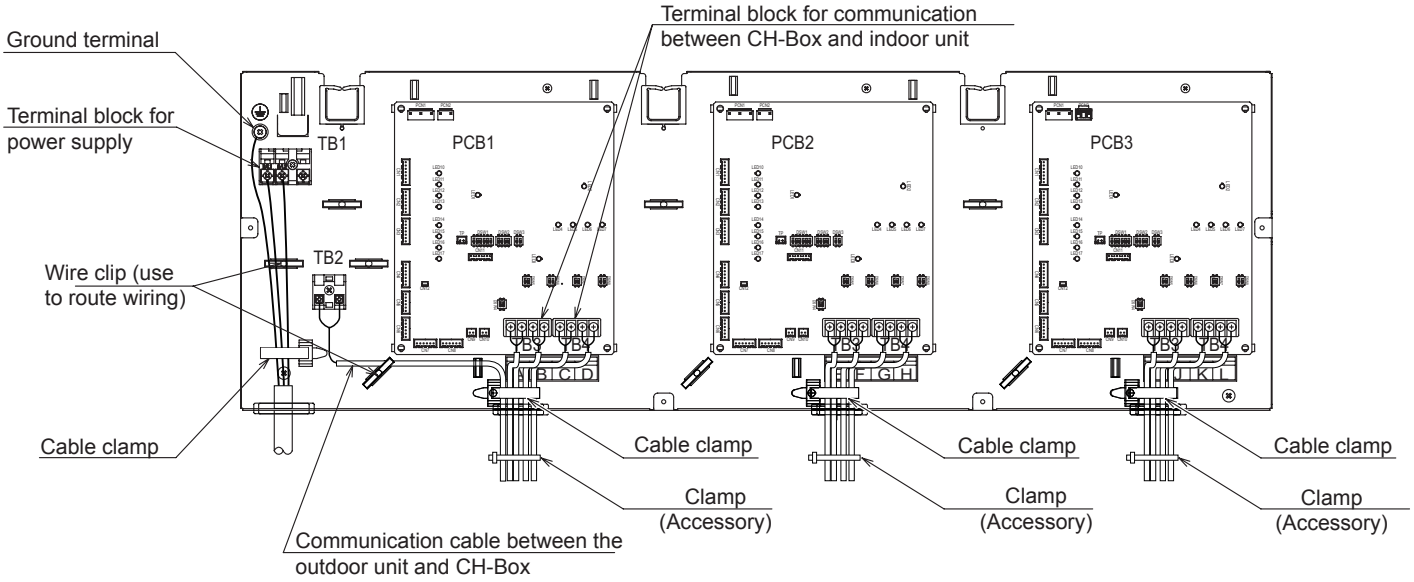

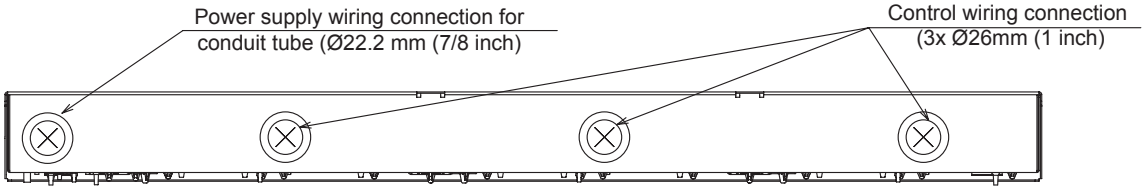

TB1: Terminal Block for Power Supply; TB2: Terminal Block for Communication; TB3, TB4: Terminal Block for Communication

NOTE

- *Above figure illustrate the example of CH-AP12MSSX.*
- *Number of PCBs are different depending on model number.*
- *Refer to the following table:*

	PCB1	PCB2	PCB3	PCB4
CH-AP04MSSX	○	×	×	×
CH-AP08MSSX	○	○	×	×
CH-AP12MSSX	○	○	○	×
CH-AP16MSSX	○	○	○	○

◆ Electrical Wiring Connection

- Perform the electrical wiring work for the CH-Boxes. Select the wire size according to the table below.
- Pay attention to the marks on the terminal block when connecting wires for CH-Box and indoor unit / outdoor unit.

Model	Power Supply	Earth Wire Size (mm²)	Earth Wire Size (mm²)	Power Source Cable Size EN60 335-1(mm²) *1	Transmitting Cable Size EN60 335-1 (mm²)*1	CB (A)	Maximum Current (A)
CH-AP04MSSX	1~ 230V 50Hz	2.0	15/30	0.75	0.75	5	0.2
CH-AP08MSSX							0.4
CH-AP12MSSX							0.6
CH-AP16MSSX							0.8

NOTE

- *Follow local codes and regulations when selecting field wires.*
- *The wire sizes marked with *1 in the above table are selected at the maximum current of the unit according to the European Standard, EN60 335-1. Use the wires which are not lighter than the ordinary tough rubber sheathed flexible cord (code designation H05RN-F) or ordinary polychloroprene sheathed flexible cord (code designation H05RN-F).*
- *Use a shielded cable for the transmitting circuit and connect it to ground.*

◆ Setting of DSW

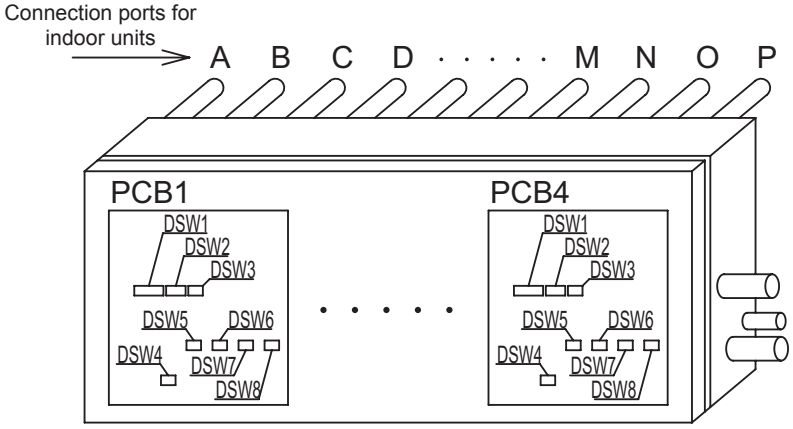

DSW1	DSW2 (Connection port setting)	DSW3	DSW4 - 8 (Fuse recover)	
No setting is required	This setting is required. When the connection port is not used, turn ON the applicable pin shown in table 1. Example: When the connection port "D" is not used, turn ON DW2-Number 4 pin on PCB1.	No setting is required	In case of applying high voltage to terminals TB2, TB3 or TB4, the 0.5 A fuse on the PCB is open. In such a case, first reconnect the wiring correctly to the terminal block, and then set the Number 1 pin to ON.	
			DSW4 (for TB2) Factory setting fuse recover	DSW5 - 8 (for TB3 and TB4) Factory setting fuse recover
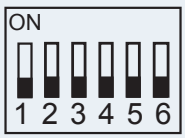		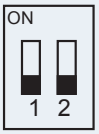	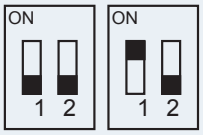	

MODELS	CH-AP04MSSX				CH-AP08MSSX				CH-AP12MSSX				CH-AP16MSSX			
Connection ports for indoor unit	A	B	C	D	E	F	G	H	I	J	K	L	M	N	O	P
PCB Number	PCB1				PCB2				PCB3				PCB4			
DSW2 Pin Number	1	2	3	4	1	2	3	4	1	2	3	4	1	2	3	4
DSW5 - 8	5	6	7	8	5	6	7	8	5	6	7	8	5	6	7	8

Table 1: Cross reference table of DSW settings and connection ports for indoor unit

NOTE

- *The "■" mark indicates the position of DSW. Figures show setting before shipment.*
- *All indoor and outdoor units must be shut down prior to attempting to make DSW adjustments, otherwise, the settings will not take effect.*

HITACHI

10. Optional functions

Index

10.1 Optional functions available in the outdoor units..... 116

10.1 Optional functions available in the outdoor units

External input function	
Optional function	**Explanation**
Fixing Operation Mode (Heating/Cooling)	This function fixes the operation mode, heating or cooling. If indoor unit is set on Heating (Cooling) mode when Cooling (Heating) mode is fixed, the indoor unit will be thermo-OFF.
Demand stoppage	When this function is enabled, the compressor is stopped and the indoor units are put under thermo-OFF condition.
Outdoor unit fan motor stop/ start (snow sensor)	This function starts all the outdoor fan motors and are operated at the full speed if the outdoor temperature is below 10 °C (When the outdoor temperature is higher than 10 °C, the fan motor will not be operated) during compressor stoppage in order to prevents the outdoor units from a condition covered with snow.
Forced stoppage	This function produces an emergency stoppage. The compressor and indoor fans do not operate.
Demand Current Control	This function regulates Outdoor running current 40%, 60%, 70%, 80%, 100%, if demanded current is above set, the indoor unit capacity is reduced still thermo-OFF if needs.
Forced noise reduction	This function reduces the compressor and fan rotation frequency and, as a result, the sound level and capacity. (4 sound pressure level cases can be selected) (Only for RAS-(8-12)FSXNME).

External output function	
Optional function	**Explanation**
Operation signal	The operation signal is sent to output terminals when the indoor units (or a single indoor unit) are operating. This function can be used for the circulation or humidification operation.
Alarm signal	This function is used to receive the alarm signal. The alarm signal will be sent to output terminals when the indoor units (or a single indoor unit) are operating and an alarm occurs in the system.
Compressor ON signal	This function is used to receive the compressor operation signal.
Defrosting signal	This function is used to receive the defrosting signal.

◆ RAS-(4-6)FS(V)NME

	Optional functions (by 7–segment display)	
	Optional function	Explanation
User confort	Indoor unit fan control during the thermo-OFF in heating mode	Normally, the fan speed is changed to “LOW” at heating thermo-OFF. However, the indoor fan motor is operated at “LOW” and stopped repeatedly by setting this function.
	Cancellation of the hot start	This function allows to disable compressor’s protection controls that ensure proper oil viscosity. In case this function is activated, compressor operation can start whenever is it required but reliability of component may decrease. In case this function is not activated, compressor operation is allowed in case crankase heater has been powered on for a certain time.
	Cold draft protection	The discharge air temperature of the indoor unit is also low, the outdoor unit is switching operation mode to prevent this low discharge air temperature.
Outdoor acoustic control	Night-shift (low noise)	The night shift operation shall be applied in case the cooling capacity has the allowed range to decrease the capacity and the low noise level operation is required especially at night.
	Low noise setting	This setting reduce the compressor frequency and the outdoor fan motor rotation frequency. (The working range in cooling/heating will be restricted).
	Fan rotation adjustment (to prevent humming noises in multiple installation)	If the outdoor unit fans makes a whining sound in case of the multiple installation, set this operation in the required outdoor units.
Outdoor unit performance	Cancellation of the outdoor ambient temperature limit.	The heating operation is continued under a high outdoor temperature or the cooling operation is continued under a low temperature.
	Defrost for cold area (change in the defrost condition)	This function changes the defrosting operation conditions. It is particularly useful in cold areas.
	SLo (fan speed) Defrost setting	When this function is enabled, the indoor fan speed in defrost mode switches to slow instead of stopping the fan.
	Priority capacity mode	By setting this function, the target frequency and current limit of the compressor are set higher.
	Heating/cooling capacity priority mode	Change of upper limit for compressor frequency of heating/cooling operation.
	Hot gas bypass control disabled	To set SVC (hot bypass) in OFF position (disabled).
	High Static pressure mode	To add static pressure.
	Fan operation during force stoppage.	Allows to set indoor unit fan during emergency operation of outdoor unit.
	Intermittent operations of outdoor fan motor	When the outdoor temperature reaches the setting temperature, all the outdoor fan motors start intermitted operation. When the outdoor temperature is at least 5ºC higher than the setting temperature, the outdoor fan motors stop operating.
ECO	Demand function setting	Demand control setting is adapting the self-demand function, which causes the power consumption to drop drastically for the purpose of saving energy.
	Wave function setting	This function sets the outdoor flow. If the flow demanded is above the flow set, the capacity of the indoor unit is reduced and the thermostat may even be disabled if necessary. Control of the operation flow is not a set value and may vary within a range.
	Crankase	Allows to stop crankase heater.
Indoor unit	Indoor unit expansion valve	It is possible to regulate the opening of the expansión valve in different ways operating situations with the aim of improving the performance and the comfort of the installation.

◆ RAS-(8-12)FSXNME

	Optional functions (by 7–segment display)	
	Optional function	Explanation
User confort	Indoor unit fan control during the thermo-OFF in heating mode	Normally, the fan speed is changed to “LOW” at heating thermo-OFF. However, the indoor fan motor is operated at “LOW” and stopped repeatedly by setting this function.
	Cancellation of the hot start	This function allows to disable compressor’s protection controls that ensure proper oil viscosity. In case this function is activated, compressor operation can start whenever is it required but reliability of component may decrease. In case this function is not activated, compressor operation is allowed in case crankase heater has been powered on for a certain time.
	Cold draft protection	The discharge air temperature of the indoor unit is also low, the outdoor unit is switching operation mode to prevent this low discharge air temperature.
	Indoor fan hot start period	To control indoor fan when operation starts in heating to avoid blow cold air.
Outdoor acoustic control	Night-shift (low noise)	The night shift operation shall be applied in case the cooling capacity has the allowed range to decrease the capacity and the low noise level operation is required especially at night.
	Low noise setting	This setting reduce the compressor frequency and the outdoor fan motor rotation frequency. (The working range in cooling/heating will be restricted).
	Fan rotation adjustment (to prevent humming noises in multiple installation)	If the outdoor unit fans makes a whining sound in case of the multiple installation, set this operation in the required outdoor units.
Outdoor unit performance	Cancellation of the outdoor ambient temperature limit.	The heating operation is continued under a high outdoor temperature or the cooling operation is continued under a low temperature.
	Forced defrosting after enforced stoppage during defrosting cycle	It forces defrost in case ODU is forcedly stopped.
	Defrost for cold area (change in the defrost condition)	This function changes the defrosting operation conditions. It is particularly useful in cold areas.
	SLo (fan speed) Defrost setting	When this function is enabled, the indoor fan speed in defrost mode switches to slow instead of stopping the fan.
	Priority capacity mode	By setting this function, the target frequency and current limit of the compressor are set higher.
	Minimum evaporating temperature setting for cooling	This optional function allows outdoor unit to evaporate at lower temperature below standard value, providing more capacity if required.
	Compressor frequency control target value for heating	This function allows to correct Pd value of outdoor unit.
	Heating/cooling capacity priority mode	Change of upper limit for compressor frequency of heating/cooling operation..
	Hot gas bypass control disabled	To set SVC (hot bypass) in OFF position (disabled).
	High Static pressure mode	To add static pressure.
	Fan operation during force stoppage.	Allows to set indoor unit fan during emergency operation of outdoor unit.
	Intermittent operations of outdoor fan motor	When the outdoor temperature reaches the setting temperature, all the outdoor fan motors start intermitted operation. When the outdoor temperature is at least 5ºC higher than the setting temperature, the outdoor fan motors stop operating.
Protection	Intermitent operation of outdoor fan motor	To avoid frost formation
ECO	Demand function setting	Demand control setting is adapting the self-demand function, which causes the power consumption to drop drastically for the purpose of saving energy.
	Wave function setting	This function sets the outdoor flow. If the flow demanded is above the flow set, the capacity of the indoor unit is reduced and the thermostat may even be disabled if necessary. Control of the operation flow is not a set value and may vary within a range.
	Crankase	Allows to stop crankase heater.
Indoor unit	Indoor unit expansion valve	It is possible to regulate the opening of the expansión valve in different ways operating situations with the aim of improving the performance and the comfort of the installation.

11. Capacity tables (partial loads)

Index

12.1 Cooling capacity tables according to total power of combined indoor units 124

12.1.1 FS(V)NME 124

12.1.2 FSXNME 134

12.2 Heating capacity tables according to total power of combined indoor units 144

12.2.1 FS(V)NME 144

12.2.2 FSXNME 154

11.1 Cooling capacity tables according to total power of combined indoor units

NOTE

- *To: Inlet air temperature in the outdoor DB (°C)*
- *Ti: Inlet air temperature in the indoor WB (°C)*
- *CAP: Capacity at compressor maximum frequency (kW)*
- *IPT: Input power (kW)*

11.1.1 FS(V)NME

◆ **RAS-4FS(V)NME**

	To/ Ti	14		16		18		19		20		22		23		24	
		CAP	IPT	CAP	IPT	CAP	IPT	CAP	IPT	CAP	IPT	CAP	IPT	CAP	IPT	CAP	IPT
130%	10	9.18	2.37	10.78	2.51	12.33	2.63	13.11	2.70	13.81	2.74	15.21	2.79	15.93	2.81	16.56	2.83
	12	9.18	2.37	10.78	2.51	12.33	2.63	13.11	2.71	13.81	2.75	15.21	2.80	15.93	2.81	16.56	2.83
	14	9.18	2.38	10.78	2.52	12.33	2.64	13.11	2.71	13.81	2.76	15.21	2.80	15.93	2.82	16.56	2.84
	16	9.18	2.40	10.78	2.53	12.33	2.65	13.11	2.71	13.81	2.76	15.21	2.82	15.93	2.83	16.56	2.86
	18	9.18	2.41	10.78	2.55	12.33	2.67	13.11	2.76	13.81	2.79	15.21	2.84	15.93	2.86	16.56	2.89
	20	9.18	2.43	10.78	2.57	12.33	2.70	13.11	2.78	13.81	2.82	15.21	2.86	15.93	2.88	16.56	2.90
	22	9.18	2.46	10.78	2.60	12.33	2.74	13.11	2.81	13.81	2.84	15.21	2.90	15.93	2.92	16.56	2.95
	24	9.18	2.48	10.78	2.63	12.33	2.77	13.11	2.85	13.81	2.88	15.21	2.93	15.93	2.95	16.56	2.98
	25	9.18	2.51	10.78	2.65	12.33	2.80	13.11	2.87	13.81	2.90	15.21	2.97	15.93	2.99	16.56	3.02
	26	9.20	2.53	10.78	2.67	12.31	2.81	13.08	2.88	13.78	2.92	15.17	2.98	15.87	3.00	16.51	3.02
	28	9.21	2.55	10.74	2.69	12.23	2.83	12.97	2.91	13.66	2.94	15.02	3.00	15.68	3.02	16.33	3.04
	30	9.17	2.59	10.65	2.72	12.08	2.86	12.80	2.93	13.48	2.97	14.78	3.03	15.40	3.05	16.05	3.08
	32	9.08	2.66	10.51	2.80	11.88	2.93	12.57	3.01	13.22	3.05	14.46	3.10	15.04	3.12	15.65	3.15
	34	8.94	2.73	10.32	2.87	11.62	3.01	12.27	3.08	12.90	3.12	14.05	3.17	14.58	3.19	15.15	3.22
	35	8.86	2.76	10.20	2.90	11.47	3.05	12.10	3.12	12.70	3.15	13.81	3.22	14.31	3.23	14.85	3.26
	36	8.76	2.84	10.07	2.99	11.30	3.12	11.91	3.21	12.50	3.24	13.55	3.30	14.02	3.32	14.53	3.35
	38	8.52	3.00	9.77	3.14	10.92	3.29	11.49	3.36	12.02	3.40	12.97	3.47	13.38	3.49	13.82	3.52
	40	8.24	3.16	9.42	3.31	10.48	3.45	11.01	3.53	11.48	3.57	12.30	3.63	12.65	3.65	12.99	3.69
	43	7.73	3.32	8.79	3.47	9.71	3.62	10.16	3.70	10.53	3.74	11.14	3.81	11.38	3.83	11.54	6.33
	46	7.10	3.55	8.05	3.70	8.80	3.84	9.18	3.93	9.42	3.98	9.78	4.05	9.90	4.07	9.85	6.30
	48	6.63	3.70	7.49	3.85	8.13	3.99	8.44	4.08	8.59	4.13	8.76	4.20	8.80	4.23	8.59	5.15
120%	10	9.18	2.33	10.78	2.46	12.33	2.58	13.11	2.65	13.81	2.68	15.21	2.73	15.93	2.75	16.56	2.78
	12	9.18	2.32	10.78	2.46	12.33	2.58	13.11	2.66	13.81	2.69	15.21	2.74	15.93	2.75	16.56	2.78
	14	9.18	2.34	10.78	2.47	12.33	2.59	13.11	2.66	13.81	2.70	15.21	2.74	15.93	2.77	16.56	2.79
	16	9.18	2.36	10.78	2.48	12.33	2.60	13.11	2.66	13.81	2.70	15.21	2.77	15.93	2.78	16.56	2.81
	18	9.18	2.36	10.78	2.50	12.33	2.62	13.11	2.70	13.81	2.73	15.21	2.79	15.93	2.81	16.56	2.83
	20	9.18	2.38	10.78	2.52	12.33	2.65	13.11	2.72	13.81	2.77	15.21	2.81	15.93	2.83	16.56	2.85
	22	9.18	2.41	10.78	2.55	12.33	2.68	13.11	2.75	13.81	2.79	15.21	2.85	15.93	2.87	16.56	2.90
	24	9.18	2.44	10.78	2.58	12.33	2.71	13.11	2.80	13.81	2.83	15.21	2.88	15.93	2.90	16.56	2.92
	25	9.18	2.46	10.78	2.60	12.33	2.74	13.11	2.82	13.81	2.85	15.21	2.91	15.93	2.93	16.56	2.96
	26	9.20	2.48	10.78	2.62	12.31	2.75	13.08	2.83	13.78	2.87	15.17	2.92	15.87	2.94	16.51	2.96
	28	9.21	2.50	10.74	2.64	12.23	2.78	12.97	2.86	13.66	2.89	15.02	2.94	15.68	2.96	16.33	2.99
	30	9.17	2.54	10.65	2.67	12.08	2.81	12.80	2.88	13.48	2.91	14.78	2.97	15.40	2.99	16.05	3.02
	32	9.08	2.61	10.51	2.74	11.88	2.88	12.57	2.95	13.22	2.99	14.46	3.04	15.04	3.06	15.65	3.09
	34	8.94	2.68	10.32	2.82	11.62	2.95	12.27	3.02	12.90	3.06	14.05	3.11	14.58	3.13	15.15	3.16
	35	8.86	2.70	10.20	2.85	11.47	2.99	12.10	3.06	12.70	3.09	13.81	3.15	14.31	3.16	14.85	3.20
	36	8.76	2.78	10.07	2.93	11.30	3.06	11.91	3.14	12.50	3.17	13.55	3.24	14.02	3.26	14.53	3.29
	38	8.52	2.94	9.77	3.08	10.92	3.23	11.49	3.30	12.02	3.34	12.97	3.40	13.38	3.42	13.82	3.45
	40	8.24	3.10	9.42	3.25	10.48	3.38	11.01	3.46	11.48	3.50	12.30	3.56	12.65	3.58	12.99	3.62
	43	7.73	3.26	8.79	3.41	9.71	3.55	10.16	3.63	10.53	3.67	11.14	3.74	11.38	3.76	11.54	6.21
	46	7.10	3.48	8.05	3.63	8.80	3.77	9.18	3.86	9.42	3.90	9.78	3.97	9.90	3.99	9.85	6.18
	48	6.63	3.63	7.49	3.78	8.13	3.91	8.44	4.00	8.59	4.05	8.76	4.12	8.80	4.14	8.59	5.05

RAS-4FS(V)NME

	To/ Ti	14		16		18		19		20		22		23		24	
		CAP	IPT	CAP	IPT	CAP	IPT	CAP	IPT	CAP	IPT	CAP	IPT	CAP	IPT	CAP	IPT
110%	10	9.18	2.31	10.78	2.43	12.33	2.56	13.11	2.63	13.81	2.66	15.21	2.71	15.93	2.73	16.56	2.75
	12	9.18	2.30	10.78	2.43	12.33	2.56	13.11	2.64	13.81	2.67	15.21	2.72	15.93	2.73	16.56	2.75
	14	9.18	2.32	10.78	2.44	12.33	2.57	13.11	2.64	13.81	2.68	15.21	2.72	15.93	2.74	16.56	2.76
	16	9.18	2.33	10.78	2.45	12.33	2.58	13.11	2.64	13.81	2.68	15.21	2.74	15.93	2.75	16.56	2.78
	18	9.18	2.34	10.78	2.47	12.33	2.60	13.11	2.68	13.81	2.71	15.21	2.76	15.93	2.78	16.56	2.80
	20	9.18	2.36	10.78	2.49	12.33	2.63	13.11	2.70	13.81	2.74	15.21	2.78	15.93	2.80	16.56	2.82
	22	9.18	2.39	10.78	2.53	12.33	2.66	13.11	2.73	13.81	2.76	15.21	2.82	15.93	2.84	16.56	2.87
	24	9.18	2.41	10.78	2.56	12.33	2.69	13.11	2.77	13.81	2.80	15.21	2.85	15.93	2.87	16.56	2.90
	25	9.18	2.43	10.78	2.58	12.33	2.72	13.11	2.79	13.81	2.82	15.21	2.88	15.93	2.90	16.56	2.93
	26	9.20	2.46	10.78	2.60	12.31	2.73	13.08	2.80	13.78	2.84	15.17	2.89	15.87	2.91	16.51	2.94
	28	9.21	2.47	10.74	2.62	12.23	2.75	12.97	2.83	13.66	2.86	15.02	2.91	15.68	2.93	16.33	2.96
	30	9.17	2.51	10.65	2.65	12.08	2.78	12.80	2.85	13.48	2.88	14.78	2.94	15.40	2.96	16.05	2.99
	32	9.08	2.58	10.51	2.72	11.88	2.85	12.57	2.92	13.22	2.96	14.46	3.01	15.04	3.03	15.65	3.06
	34	8.94	2.65	10.32	2.79	11.62	2.92	12.27	2.99	12.90	3.03	14.05	3.08	14.58	3.10	15.15	3.13
	35	8.86	2.68	10.20	2.82	11.47	2.96	12.10	3.03	12.70	3.06	13.81	3.12	14.31	3.13	14.85	3.16
	36	8.76	2.76	10.07	2.90	11.30	3.03	11.91	3.11	12.50	3.14	13.55	3.20	14.02	3.23	14.53	3.26
	38	8.52	2.91	9.77	3.05	10.92	3.19	11.49	3.27	12.02	3.31	12.97	3.37	13.38	3.39	13.82	3.42
	40	8.24	3.07	9.42	3.21	10.48	3.35	11.01	3.43	11.48	3.47	12.30	3.53	12.65	3.55	12.99	3.58
	43	7.73	3.23	8.79	3.37	9.71	3.51	10.16	3.59	10.53	3.63	11.14	3.70	11.38	3.72	11.54	6.15
	46	7.10	3.45	8.05	3.60	8.80	3.73	9.18	3.82	9.42	3.86	9.78	3.93	9.90	3.95	9.85	6.12
	48	6.63	3.59	7.49	3.74	8.13	3.88	8.44	3.96	8.59	4.01	8.76	4.08	8.80	4.10	8.59	5.00
100%	10	9.18	2.26	10.78	2.39	12.33	2.51	13.11	2.58	13.81	2.61	15.21	2.65	15.93	2.67	16.56	2.70
	12	9.18	2.25	10.78	2.39	12.33	2.51	13.11	2.59	13.81	2.62	15.21	2.66	15.93	2.67	16.56	2.70
	14	9.18	2.27	10.78	2.40	12.33	2.52	13.11	2.59	13.81	2.62	15.21	2.66	15.93	2.68	16.56	2.70
	16	9.18	2.29	10.78	2.41	12.33	2.53	13.11	2.59	13.81	2.62	15.21	2.68	15.93	2.69	16.56	2.72
	18	9.18	2.29	10.78	2.43	12.33	2.55	13.11	2.62	13.81	2.65	15.21	2.70	15.93	2.72	16.56	2.75
	20	9.18	2.31	10.78	2.45	12.33	2.58	13.11	2.64	13.81	2.68	15.21	2.72	15.93	2.74	16.56	2.76
	22	9.18	2.34	10.78	2.48	12.33	2.61	13.11	2.67	13.81	2.70	15.21	2.76	15.93	2.78	16.56	2.81
	24	9.18	2.37	10.78	2.51	12.33	2.63	13.11	2.71	13.81	2.74	15.21	2.79	15.93	2.81	16.56	2.84
	25	9.18	2.39	10.78	2.53	12.33	2.66	13.11	2.73	13.81	2.76	15.21	2.82	15.93	2.84	16.56	2.87
	26	9.20	2.41	10.78	2.55	12.31	2.67	13.08	2.74	13.78	2.78	15.17	2.83	15.87	2.85	16.51	2.88
	28	9.21	2.43	10.74	2.57	12.23	2.69	12.97	2.77	13.66	2.80	15.02	2.85	15.68	2.87	16.33	2.90
	30	9.17	2.46	10.65	2.60	12.08	2.72	12.80	2.79	13.48	2.82	14.78	2.88	15.40	2.90	16.05	2.93
	32	9.08	2.53	10.51	2.66	11.88	2.79	12.57	2.86	13.22	2.90	14.46	2.95	15.04	2.97	15.65	3.00
	34	8.94	2.60	10.32	2.73	11.62	2.86	12.27	2.93	12.90	2.97	14.05	3.02	14.58	3.04	15.15	3.07
	35	8.86	2.62	10.20	2.76	11.47	2.90	12.10	2.97	12.70	3.00	13.81	3.06	14.31	3.07	14.85	3.10
	36	8.76	2.70	10.07	2.84	11.30	2.97	11.91	3.05	12.50	3.08	13.55	3.14	14.02	3.16	14.53	3.19
	38	8.52	2.85	9.77	2.99	10.92	3.13	11.49	3.20	12.02	3.24	12.97	3.30	13.38	3.32	13.82	3.35
	40	8.24	3.01	9.42	3.15	10.48	3.28	11.01	3.36	11.48	3.40	12.30	3.46	12.65	3.48	12.99	3.51
	43	7.73	3.16	8.79	3.31	9.71	3.44	10.16	3.52	10.53	3.56	11.14	3.63	11.38	3.65	11.54	6.03
	46	7.10	3.38	8.05	3.53	8.80	3.66	9.18	3.75	9.42	3.79	9.78	3.86	9.90	3.88	9.85	6.00
	48	6.63	3.52	7.49	3.67	8.13	3.80	8.44	3.89	8.59	3.93	8.76	4.00	8.80	4.02	8.59	4.91
90%	10	8.26	1.99	9.70	2.10	11.10	2.20	11.80	2.27	12.42	2.29	13.69	2.34	14.33	2.35	14.90	2.38
	12	8.26	1.98	9.70	2.10	11.10	2.20	11.80	2.27	12.42	2.30	13.69	2.34	14.33	2.35	14.90	2.38
	14	8.26	2.00	9.70	2.11	11.10	2.21	11.80	2.27	12.42	2.31	13.69	2.34	14.33	2.36	14.90	2.38
	16	8.26	2.01	9.70	2.12	11.10	2.22	11.80	2.27	12.42	2.31	13.69	2.36	14.33	2.37	14.90	2.40
	18	8.26	2.02	9.70	2.13	11.10	2.24	11.80	2.31	12.42	2.34	13.69	2.38	14.33	2.40	14.90	2.42
	20	8.26	2.04	9.70	2.15	11.10	2.27	11.80	2.33	12.42	2.36	13.69	2.40	14.33	2.41	14.90	2.43
	22	8.26	2.06	9.70	2.18	11.10	2.29	11.80	2.35	12.42	2.38	13.69	2.43	14.33	2.45	14.90	2.48
	24	8.26	2.08	9.70	2.20	11.10	2.32	11.80	2.39	12.42	2.41	13.69	2.46	14.33	2.48	14.90	2.50
	25	8.26	2.10	9.70	2.22	11.10	2.34	11.80	2.41	12.42	2.43	13.69	2.48	14.33	2.50	14.90	2.53
	26	8.28	2.12	9.70	2.24	11.08	2.35	11.77	2.41	12.40	2.45	13.65	2.49	14.28	2.51	14.86	2.53
	28	8.29	2.13	9.67	2.26	11.01	2.37	11.67	2.44	12.30	2.47	13.52	2.51	14.11	2.53	14.70	2.55
	30	8.25	2.17	9.59	2.28	10.88	2.40	11.52	2.46	12.13	2.48	13.30	2.54	13.86	2.55	14.44	2.58
	32	8.17	2.23	9.46	2.34	10.69	2.46	11.31	2.52	11.90	2.55	13.01	2.60	13.53	2.62	14.09	2.64
	34	8.05	2.29	9.28	2.41	10.46	2.52	11.04	2.58	11.61	2.62	12.64	2.66	13.12	2.68	13.63	2.70
	35	7.97	2.31	9.18	2.43	10.32	2.55	10.89	2.62	11.43	2.64	12.43	2.69	12.88	2.70	13.37	2.73
	36	7.88	2.38	9.06	2.50	10.17	2.62	10.72	2.69	11.25	2.71	12.20	2.76	12.62	2.78	13.08	2.81
	38	7.67	2.51	8.79	2.63	9.83	2.76	10.34	2.82	10.82	2.85	11.67	2.90	12.04	2.92	12.43	2.95
	40	7.42	2.65	8.48	2.77	9.43	2.89	9.91	2.96	10.33	2.99	11.07	3.04	11.38	3.06	11.69	3.09
	43	6.95	2.78	7.91	2.91	8.74	3.03	9.15	3.10	9.48	3.13	10.02	3.19	10.24	3.21	10.39	5.31
	46	6.39	2.97	7.24	3.10	7.92	3.22	8.26	3.30	8.48	3.33	8.80	3.39	8.91	3.41	8.87	5.28
	48	5.97	3.10	6.74	3.23	7.31	3.34	7.60	3.42	7.73	3.46	7.89	3.52	7.92	3.54	7.73	4.32

RAS-4FS(V)NME

	To/ Ti	14		16		18		19		20		22		23		24	
		CAP	IPT	CAP	IPT	CAP	IPT	CAP	IPT	CAP	IPT	CAP	IPT	CAP	IPT	CAP	IPT
80%	10	7.35	1.74	8.62	1.84	9.87	1.93	10.49	1.98	11.04	2.01	12.17	2.04	12.74	2.06	13.25	2.08
	12	7.35	1.73	8.62	1.84	9.87	1.93	10.49	1.99	11.04	2.01	12.17	2.05	12.74	2.06	13.25	2.08
	14	7.35	1.75	8.62	1.85	9.87	1.94	10.49	1.99	11.04	2.02	12.17	2.05	12.74	2.07	13.25	2.08
	16	7.35	1.76	8.62	1.85	9.87	1.94	10.49	1.99	11.04	2.02	12.17	2.07	12.74	2.07	13.25	2.10
	18	7.35	1.77	8.62	1.87	9.87	1.96	10.49	2.02	11.04	2.04	12.17	2.08	12.74	2.10	13.25	2.12
	20	7.35	1.78	8.62	1.88	9.87	1.98	10.49	2.04	11.04	2.07	12.17	2.10	12.74	2.11	13.25	2.13
	22	7.35	1.80	8.62	1.91	9.87	2.01	10.49	2.06	11.04	2.08	12.17	2.13	12.74	2.14	13.25	2.17
	24	7.35	1.82	8.62	1.93	9.87	2.03	10.49	2.09	11.04	2.11	12.17	2.15	12.74	2.17	13.25	2.19
	25	7.35	1.84	8.62	1.94	9.87	2.05	10.49	2.11	11.04	2.13	12.17	2.17	12.74	2.19	13.25	2.21
	26	7.36	1.86	8.62	1.96	9.85	2.06	10.46	2.11	11.02	2.14	12.14	2.18	12.69	2.20	13.21	2.22
	28	7.37	1.87	8.59	1.98	9.78	2.07	10.38	2.14	10.93	2.16	12.02	2.20	12.55	2.21	13.07	2.23
	30	7.34	1.90	8.52	2.00	9.67	2.10	10.24	2.15	10.78	2.17	11.83	2.22	12.32	2.24	12.84	2.26
	32	7.27	1.95	8.41	2.05	9.51	2.15	10.05	2.20	10.58	2.24	11.57	2.27	12.03	2.29	12.52	2.31
	34	7.16	2.00	8.25	2.11	9.30	2.20	9.82	2.26	10.32	2.29	11.24	2.33	11.66	2.34	12.12	2.36
	35	7.09	2.02	8.16	2.13	9.17	2.24	9.68	2.29	10.16	2.31	11.05	2.36	11.45	2.37	11.88	2.39
	36	7.01	2.08	8.05	2.19	9.04	2.29	9.53	2.35	10.00	2.37	10.84	2.42	11.22	2.43	11.63	2.46
	38	6.82	2.20	7.82	2.30	8.73	2.41	9.19	2.47	9.62	2.50	10.38	2.54	10.71	2.56	11.05	2.58
	40	6.59	2.32	7.53	2.43	8.38	2.53	8.81	2.59	9.18	2.62	9.84	2.66	10.12	2.68	10.39	2.70
	43	6.18	2.44	7.03	2.55	7.77	2.65	8.13	2.71	8.42	2.74	8.91	2.79	9.10	2.81	9.23	4.65
	46	5.68	2.60	6.44	2.72	7.04	2.82	7.34	2.88	7.53	2.92	7.82	2.97	7.92	2.99	7.88	4.62
	48	5.30	2.71	5.99	2.82	6.50	2.93	6.75	2.99	6.87	3.03	7.01	3.08	7.04	3.10	6.88	3.78
70%	10	6.43	1.49	7.55	1.57	8.63	1.65	9.18	1.70	9.66	1.72	10.65	1.75	11.15	1.77	11.59	1.78
	12	6.43	1.49	7.55	1.57	8.63	1.65	9.18	1.71	9.66	1.73	10.65	1.76	11.15	1.77	11.59	1.78
	14	6.43	1.50	7.55	1.58	8.63	1.66	9.18	1.71	9.66	1.73	10.65	1.76	11.15	1.77	11.59	1.78
	16	6.43	1.51	7.55	1.59	8.63	1.67	9.18	1.71	9.66	1.73	10.65	1.77	11.15	1.78	11.59	1.80
	18	6.43	1.51	7.55	1.60	8.63	1.68	9.18	1.73	9.66	1.75	10.65	1.78	11.15	1.80	11.59	1.81
	20	6.43	1.53	7.55	1.61	8.63	1.70	9.18	1.75	9.66	1.77	10.65	1.80	11.15	1.81	11.59	1.82
	22	6.43	1.55	7.55	1.63	8.63	1.72	9.18	1.77	9.66	1.78	10.65	1.82	11.15	1.84	11.59	1.86
	24	6.43	1.56	7.55	1.65	8.63	1.74	9.18	1.79	9.66	1.81	10.65	1.84	11.15	1.86	11.59	1.87
	25	6.43	1.57	7.55	1.67	8.63	1.76	9.18	1.80	9.66	1.82	10.65	1.86	11.15	1.88	11.59	1.90
	26	6.44	1.59	7.55	1.68	8.62	1.77	9.16	1.81	9.64	1.84	10.62	1.87	11.11	1.88	11.56	1.90
	28	6.45	1.60	7.52	1.69	8.56	1.78	9.08	1.83	9.56	1.85	10.51	1.88	10.98	1.90	11.43	1.91
	30	6.42	1.63	7.46	1.71	8.46	1.80	8.96	1.84	9.44	1.86	10.35	1.90	10.78	1.92	11.23	1.94
	32	6.36	1.67	7.36	1.76	8.32	1.84	8.80	1.89	9.26	1.92	10.12	1.95	10.52	1.96	10.96	1.98
	34	6.26	1.72	7.22	1.80	8.13	1.89	8.59	1.94	9.03	1.96	9.83	1.99	10.20	2.01	10.60	2.02
	35	6.20	1.73	7.14	1.82	8.03	1.92	8.47	1.96	8.89	1.98	9.67	2.02	10.02	2.03	10.40	2.05
	36	6.13	1.78	7.05	1.88	7.91	1.96	8.34	2.01	8.75	2.03	9.49	2.07	9.82	2.09	10.17	2.11
	38	5.97	1.88	6.84	1.98	7.64	2.07	8.04	2.11	8.42	2.14	9.08	2.18	9.37	2.19	9.67	2.21
	40	5.77	1.99	6.59	2.08	7.33	2.17	7.70	2.22	8.04	2.24	8.61	2.28	8.85	2.30	9.09	2.32
	43	5.41	2.09	6.15	2.18	6.79	2.27	7.11	2.33	7.37	2.35	7.80	2.39	7.96	2.41	8.08	3.98
	46	4.97	2.23	5.63	2.33	6.16	2.42	6.42	2.47	6.59	2.50	6.84	2.54	6.93	2.56	6.90	3.96
	48	4.64	2.32	5.24	2.42	5.69	2.51	5.91	2.56	6.01	2.59	6.14	2.64	6.16	2.66	6.02	3.24
60%	10	5.51	1.29	6.47	1.36	7.40	1.43	7.87	1.47	8.28	1.48	9.13	1.51	9.56	1.52	9.94	1.54
	12	5.51	1.28	6.47	1.36	7.40	1.43	7.87	1.47	8.28	1.49	9.13	1.52	9.56	1.52	9.94	1.54
	14	5.51	1.29	6.47	1.37	7.40	1.43	7.87	1.47	8.28	1.50	9.13	1.52	9.56	1.53	9.94	1.54
	16	5.51	1.30	6.47	1.37	7.40	1.44	7.87	1.47	8.28	1.50	9.13	1.53	9.56	1.54	9.94	1.55
	18	5.51	1.31	6.47	1.38	7.40	1.45	7.87	1.50	8.28	1.51	9.13	1.54	9.56	1.55	9.94	1.57
	20	5.51	1.32	6.47	1.39	7.40	1.47	7.87	1.51	8.28	1.53	9.13	1.55	9.56	1.56	9.94	1.58
	22	5.51	1.34	6.47	1.41	7.40	1.48	7.87	1.52	8.28	1.54	9.13	1.58	9.56	1.59	9.94	1.60
	24	5.51	1.35	6.47	1.43	7.40	1.50	7.87	1.55	8.28	1.56	9.13	1.59	9.56	1.60	9.94	1.62
	25	5.51	1.36	6.47	1.44	7.40	1.52	7.87	1.56	8.28	1.58	9.13	1.61	9.56	1.62	9.94	1.64
	26	5.52	1.38	6.47	1.45	7.39	1.52	7.85	1.56	8.27	1.59	9.10	1.62	9.52	1.63	9.91	1.64
	28	5.53	1.38	6.45	1.46	7.34	1.54	7.78	1.58	8.20	1.60	9.01	1.63	9.41	1.64	9.80	1.65
	30	5.50	1.40	6.39	1.48	7.25	1.55	7.68	1.59	8.09	1.61	8.87	1.64	9.24	1.65	9.63	1.67
	32	5.45	1.44	6.31	1.52	7.13	1.59	7.54	1.63	7.93	1.65	8.67	1.68	9.02	1.69	9.39	1.71
	34	5.37	1.48	6.19	1.56	6.97	1.63	7.36	1.67	7.74	1.69	8.43	1.72	8.75	1.73	9.09	1.75
	35	5.31	1.50	6.12	1.58	6.88	1.65	7.26	1.69	7.62	1.71	8.29	1.75	8.59	1.75	8.91	1.77
	36	5.26	1.54	6.04	1.62	6.78	1.69	7.15	1.74	7.50	1.76	8.13	1.79	8.41	1.80	8.72	1.82
	38	5.11	1.63	5.86	1.71	6.55	1.79	6.89	1.82	7.21	1.85	7.78	1.88	8.03	1.89	8.29	1.91
	40	4.95	1.72	5.65	1.80	6.29	1.87	6.60	1.92	6.89	1.94	7.38	1.97	7.59	1.98	7.79	2.00
	43	4.64	1.80	5.28	1.89	5.82	1.96	6.10	2.01	6.32	2.03	6.68	2.07	6.83	2.08	6.93	3.44
	46	4.26	1.93	4.83	2.01	5.28	2.09	5.51	2.13	5.65	2.16	5.87	2.20	5.94	2.21	5.91	3.42
	48	3.98	2.01	4.49	2.09	4.88	2.17	5.07	2.22	5.15	2.24	5.26	2.28	5.28	2.29	5.16	2.80

RAS-4FS(V)NME

	To/ Ti	14		16		18		19		20		22		23		24	
		CAP	IPT	CAP	IPT	CAP	IPT	CAP	IPT	CAP	IPT	CAP	IPT	CAP	IPT	CAP	IPT
50%	10	4.59	1.06	5.39	1.12	6.17	1.18	6.56	1.21	6.90	1.22	7.61	1.25	7.96	1.26	8.28	1.27
	12	4.59	1.06	5.39	1.12	6.17	1.18	6.56	1.22	6.90	1.23	7.61	1.25	7.96	1.26	8.28	1.27
	14	4.59	1.07	5.39	1.13	6.17	1.18	6.56	1.22	6.90	1.23	7.61	1.25	7.96	1.26	8.28	1.27
	16	4.59	1.07	5.39	1.13	6.17	1.19	6.56	1.22	6.90	1.23	7.61	1.26	7.96	1.27	8.28	1.28
	18	4.59	1.08	5.39	1.14	6.17	1.20	6.56	1.23	6.90	1.25	7.61	1.27	7.96	1.28	8.28	1.29
	20	4.59	1.09	5.39	1.15	6.17	1.21	6.56	1.24	6.90	1.26	7.61	1.28	7.96	1.29	8.28	1.30
	22	4.59	1.10	5.39	1.16	6.17	1.22	6.56	1.26	6.90	1.27	7.61	1.30	7.96	1.31	8.28	1.32
	24	4.59	1.11	5.39	1.18	6.17	1.24	6.56	1.28	6.90	1.29	7.61	1.31	7.96	1.32	8.28	1.33
	25	4.59	1.12	5.39	1.19	6.17	1.25	6.56	1.29	6.90	1.30	7.61	1.33	7.96	1.34	8.28	1.35
	26	4.60	1.13	5.39	1.20	6.16	1.26	6.54	1.29	6.89	1.31	7.58	1.33	7.93	1.34	8.26	1.35
	28	4.61	1.14	5.37	1.21	6.11	1.27	6.49	1.30	6.83	1.32	7.51	1.34	7.84	1.35	8.17	1.36
	30	4.59	1.16	5.33	1.22	6.04	1.28	6.40	1.31	6.74	1.33	7.39	1.36	7.70	1.36	8.02	1.38
	32	4.54	1.19	5.26	1.25	5.94	1.31	6.28	1.35	6.61	1.36	7.23	1.39	7.52	1.40	7.83	1.41
	34	4.47	1.22	5.16	1.29	5.81	1.35	6.14	1.38	6.45	1.40	7.02	1.42	7.29	1.43	7.57	1.44
	35	4.43	1.23	5.10	1.30	5.73	1.36	6.05	1.40	6.35	1.41	6.91	1.44	7.16	1.44	7.43	1.46
	36	4.38	1.27	5.03	1.34	5.65	1.40	5.96	1.43	6.25	1.45	6.78	1.48	7.01	1.49	7.27	1.50
	38	4.26	1.34	4.88	1.41	5.46	1.47	5.75	1.50	6.01	1.52	6.48	1.55	6.69	1.56	6.91	1.57
	40	4.12	1.42	4.71	1.48	5.24	1.54	5.50	1.58	5.74	1.60	6.15	1.63	6.32	1.64	6.49	1.65
	43	3.86	1.49	4.40	1.55	4.85	1.62	5.08	1.66	5.26	1.67	5.57	1.70	5.69	1.71	5.77	2.84
	46	3.55	1.59	4.02	1.66	4.40	1.72	4.59	1.76	4.71	1.78	4.89	1.81	4.95	1.82	4.93	2.82
	48	3.31	1.65	3.74	1.72	4.06	1.79	4.22	1.83	4.29	1.85	4.38	1.88	4.40	1.89	4.30	2.31

◆ RAS-5FS(V)NME

	To/ Ti	14		16		18		19		20		22		23		24	
		CAP	IPT	CAP	IPT	CAP	IPT	CAP	IPT	CAP	IPT	CAP	IPT	CAP	IPT	CAP	IPT
130%	10	10.66	2.61	12.49	2.75	14.29	2.89	15.19	2.97	16.01	3.01	17.67	3.07	18.49	3.09	19.28	3.12
	12	10.66	2.60	12.49	2.75	14.29	2.89	15.19	2.98	16.01	3.02	17.67	3.07	18.49	3.09	19.28	3.11
	14	10.66	2.62	12.49	2.76	14.29	2.90	15.19	2.98	16.01	3.02	17.67	3.08	18.49	3.09	19.28	3.13
	16	10.66	3.22	12.49	2.77	14.29	2.47	15.19	2.11	16.01	2.59	17.67	3.09	18.49	3.11	19.28	3.37
	18	10.66	2.63	12.49	2.79	14.29	2.94	15.19	3.02	16.01	3.06	17.67	3.12	18.49	3.14	19.28	3.17
	20	10.66	2.67	12.49	2.82	14.29	2.97	15.19	3.05	16.01	3.09	17.67	3.15	18.49	3.16	19.28	3.19
	22	10.66	2.71	12.49	2.86	14.29	3.00	15.19	3.09	16.01	3.12	17.67	3.18	18.49	3.20	19.28	3.23
	24	10.66	2.74	12.49	2.89	14.29	3.04	15.19	3.13	16.01	3.16	17.67	3.23	18.49	3.24	19.28	3.27
	25	10.66	2.76	12.49	2.92	14.29	3.07	15.19	3.16	16.01	3.19	17.67	3.25	18.49	3.27	19.28	3.30
	26	10.67	2.77	12.49	2.93	14.27	3.08	15.16	3.16	15.97	3.21	17.59	3.26	18.39	3.29	19.16	3.31
	28	10.67	2.80	12.45	2.95	14.18	3.11	15.05	3.19	15.82	3.23	17.35	3.30	18.12	3.31	18.83	3.34
	30	10.62	2.84	12.34	2.99	14.02	3.14	14.86	3.22	15.58	3.26	17.01	3.32	17.74	3.34	18.40	3.37
	32	10.52	2.91	12.18	3.07	13.78	3.22	14.58	3.30	15.25	3.34	16.58	3.40	17.25	3.43	17.85	3.46
	34	10.37	2.99	11.95	3.15	13.46	3.30	14.21	3.38	14.83	3.43	16.05	3.49	16.66	3.51	17.20	3.54
	35	10.28	3.03	11.82	3.19	13.28	3.34	14.00	3.43	14.58	3.46	15.75	3.52	16.33	3.55	16.83	3.58
	36	10.17	3.12	11.67	3.28	13.07	3.43	13.77	3.51	14.32	3.56	15.42	3.62	15.97	3.64	16.44	3.67
	38	9.93	3.29	11.32	3.45	12.61	3.61	13.23	3.70	13.72	3.73	14.70	3.80	15.17	3.83	15.56	3.86
	40	9.64	3.48	10.91	3.64	12.07	3.78	12.61	3.87	13.04	3.92	13.87	3.99	14.27	4.01	14.58	4.05
	43	9.11	3.66	10.19	3.82	11.12	3.97	11.53	4.06	11.85	4.10	12.45	4.18	12.73	4.20	12.90	5.30
	46	8.47	3.91	9.33	4.07	10.01	4.23	10.25	4.32	10.46	4.36	10.81	4.44	10.95	4.47	10.98	5.28
	48	7.98	4.07	8.68	4.24	9.17	4.39	9.30	4.48	9.42	4.53	9.59	4.61	9.63	4.64	9.56	4.31
120%	10	10.66	2.56	12.49	2.70	14.29	2.84	15.19	2.92	16.01	2.95	17.67	3.01	18.49	3.03	19.28	3.06
	12	10.66	2.55	12.49	2.70	14.29	2.84	15.19	2.92	16.01	2.96	17.67	3.01	18.49	3.03	19.28	3.05
	14	10.66	2.57	12.49	2.71	14.29	2.85	15.19	2.92	16.01	2.96	17.67	3.02	18.49	3.04	19.28	3.07
	16	10.66	3.16	12.49	2.72	14.29	2.43	15.19	2.07	16.01	2.54	17.67	3.04	18.49	3.05	19.28	3.30
	18	10.66	2.58	12.49	2.74	14.29	2.88	15.19	2.97	16.01	3.00	17.67	3.06	18.49	3.08	19.28	3.11
	20	10.66	2.62	12.49	2.77	14.29	2.92	15.19	2.99	16.01	3.03	17.67	3.09	18.49	3.10	19.28	3.13
	22	10.66	2.65	12.49	2.80	14.29	2.94	15.19	3.03	16.01	3.06	17.67	3.12	18.49	3.14	19.28	3.17
	24	10.66	2.68	12.49	2.84	14.29	2.98	15.19	3.07	16.01	3.10	17.67	3.16	18.49	3.18	19.28	3.21
	25	10.66	2.71	12.49	2.86	14.29	3.01	15.19	3.10	16.01	3.13	17.67	3.19	18.49	3.21	19.28	3.24
	26	10.67	2.72	12.49	2.87	14.27	3.02	15.16	3.10	15.97	3.15	17.59	3.20	18.39	3.22	19.16	3.25
	28	10.67	2.74	12.45	2.90	14.18	3.05	15.05	3.13	15.82	3.17	17.35	3.23	18.12	3.25	18.83	3.28
	30	10.62	2.78	12.34	2.93	14.02	3.08	14.86	3.16	15.58	3.20	17.01	3.26	17.74	3.28	18.40	3.31
	32	10.52	2.85	12.18	3.01	13.78	3.16	14.58	3.24	15.25	3.28	16.58	3.34	17.25	3.36	17.85	3.39
	34	10.37	2.93	11.95	3.09	13.46	3.23	14.21	3.32	14.83	3.36	16.05	3.42	16.66	3.44	17.20	3.47
	35	10.28	2.97	11.82	3.13	13.28	3.28	14.00	3.36	14.58	3.40	15.75	3.46	16.33	3.48	16.83	3.51
	36	10.17	3.06	11.67	3.22	13.07	3.36	13.77	3.45	14.32	3.49	15.42	3.55	15.97	3.57	16.44	3.60
	38	9.93	3.23	11.32	3.39	12.61	3.54	13.23	3.63	13.72	3.66	14.70	3.73	15.17	3.76	15.56	3.79
	40	9.64	3.41	10.91	3.57	12.07	3.71	12.61	3.80	13.04	3.84	13.87	3.91	14.27	3.94	14.58	3.97
	43	9.11	3.59	10.19	3.75	11.12	3.90	11.53	3.98	11.85	4.03	12.45	4.10	12.73	4.12	12.90	5.20
	46	8.47	3.84	9.33	4.00	10.01	4.15	10.25	4.24	10.46	4.28	10.81	4.36	10.95	4.38	10.98	5.18
	48	7.98	4.00	8.68	4.16	9.17	4.31	9.30	4.39	9.42	4.44	9.59	4.52	9.63	4.55	9.56	4.23
110%	10	10.66	2.53	12.49	2.67	14.29	2.81	15.19	2.89	16.01	2.92	17.67	2.98	18.49	3.00	19.28	3.03
	12	10.66	2.53	12.49	2.67	14.29	2.81	15.19	2.90	16.01	2.93	17.67	2.98	18.49	3.00	19.28	3.02
	14	10.66	2.54	12.49	2.68	14.29	2.82	15.19	2.90	16.01	2.93	17.67	2.99	18.49	3.01	19.28	3.04
	16	10.66	3.13	12.49	2.69	14.29	2.40	15.19	2.05	16.01	2.51	17.67	3.01	18.49	3.02	19.28	3.27
	18	10.66	2.56	12.49	2.71	14.29	2.85	15.19	2.94	16.01	2.97	17.67	3.03	18.49	3.05	19.28	3.08
	20	10.66	2.60	12.49	2.74	14.29	2.89	15.19	2.96	16.01	3.00	17.67	3.06	18.49	3.07	19.28	3.10
	22	10.66	2.63	12.49	2.78	14.29	2.91	15.19	3.00	16.01	3.03	17.67	3.09	18.49	3.11	19.28	3.14
	24	10.66	2.66	12.49	2.81	14.29	2.96	15.19	3.04	16.01	3.07	17.67	3.13	18.49	3.15	19.28	3.18
	25	10.66	2.68	12.49	2.84	14.29	2.98	15.19	3.07	16.01	3.10	17.67	3.16	18.49	3.18	19.28	3.21
	26	10.67	2.69	12.49	2.84	14.27	2.99	15.16	3.07	15.97	3.12	17.59	3.17	18.39	3.19	19.16	3.22
	28	10.67	2.72	12.45	2.87	14.18	3.02	15.05	3.10	15.82	3.14	17.35	3.20	18.12	3.22	18.83	3.25
	30	10.62	2.76	12.34	2.90	14.02	3.05	14.86	3.12	15.58	3.17	17.01	3.23	17.74	3.24	18.40	3.27
	32	10.52	2.83	12.18	2.98	13.78	3.12	14.58	3.21	15.25	3.24	16.58	3.30	17.25	3.33	17.85	3.36
	34	10.37	2.90	11.95	3.06	13.46	3.20	14.21	3.29	14.83	3.33	16.05	3.39	16.66	3.41	17.20	3.43
	35	10.28	2.95	11.82	3.10	13.28	3.24	14.00	3.33	14.58	3.36	15.75	3.42	16.33	3.45	16.83	3.48
	36	10.17	3.03	11.67	3.18	13.07	3.33	13.77	3.41	14.32	3.46	15.42	3.52	15.97	3.53	16.44	3.56
	38	9.93	3.20	11.32	3.35	12.61	3.51	13.23	3.59	13.72	3.63	14.70	3.69	15.17	3.72	15.56	3.75
	40	9.64	3.38	10.91	3.53	12.07	3.68	12.61	3.76	13.04	3.80	13.87	3.87	14.27	3.90	14.58	3.93
	43	9.11	3.55	10.19	3.71	11.12	3.86	11.53	3.94	11.85	3.99	12.45	4.06	12.73	4.08	12.90	5.15
	46	8.47	3.80	9.33	3.96	10.01	4.11	10.25	4.19	10.46	4.24	10.81	4.31	10.95	4.34	10.98	5.13
	48	7.98	3.96	8.68	4.12	9.17	4.27	9.30	4.35	9.42	4.40	9.59	4.48	9.63	4.51	9.56	4.19

RAS-5FS(V)NME

	To/ Ti	14		16		18		19		20		22		23		24	
		CAP	IPT	CAP	IPT	CAP	IPT	CAP	IPT	CAP	IPT	CAP	IPT	CAP	IPT	CAP	IPT
100%	10	10.66	2.48	12.49	2.62	14.29	2.76	15.19	2.83	16.01	2.86	17.67	2.92	18.49	2.94	19.28	2.97
	12	10.66	2.48	12.49	2.62	14.29	2.76	15.19	2.84	16.01	2.87	17.67	2.92	18.49	2.94	19.28	2.96
	14	10.66	2.49	12.49	2.63	14.29	2.76	15.19	2.84	16.01	2.87	17.67	2.93	18.49	2.95	19.28	2.98
	16	10.66	3.07	12.49	2.64	14.29	2.36	15.19	2.01	16.01	2.46	17.67	2.95	18.49	2.96	19.28	3.21
	18	10.66	2.51	12.49	2.66	14.29	2.80	15.19	2.88	16.01	2.91	17.67	2.97	18.49	2.99	19.28	3.02
	20	10.66	2.54	12.49	2.69	14.29	2.83	15.19	2.91	16.01	2.94	17.67	3.00	18.49	3.01	19.28	3.04
	22	10.66	2.58	12.49	2.72	14.29	2.86	15.19	2.94	16.01	2.97	17.67	3.03	18.49	3.05	19.28	3.08
	24	10.66	2.61	12.49	2.76	14.29	2.90	15.19	2.98	16.01	3.01	17.67	3.07	18.49	3.09	19.28	3.12
	25	10.66	2.63	12.49	2.78	14.29	2.92	15.19	3.01	16.01	3.04	17.67	3.10	18.49	3.11	19.28	3.14
	26	10.67	2.64	12.49	2.79	14.27	2.93	15.16	3.01	15.97	3.06	17.59	3.11	18.39	3.13	19.16	3.16
	28	10.67	2.66	12.45	2.81	14.18	2.96	15.05	3.04	15.82	3.08	17.35	3.14	18.12	3.16	18.83	3.18
	30	10.62	2.70	12.34	2.85	14.02	2.99	14.86	3.06	15.58	3.11	17.01	3.16	17.74	3.18	18.40	3.21
	32	10.52	2.77	12.18	2.92	13.78	3.06	14.58	3.15	15.25	3.18	16.58	3.24	17.25	3.26	17.85	3.29
	34	10.37	2.85	11.95	3.00	13.46	3.14	14.21	3.22	14.83	3.26	16.05	3.32	16.66	3.34	17.20	3.37
	35	10.28	2.89	11.82	3.04	13.28	3.18	14.00	3.26	14.58	3.30	15.75	3.35	16.33	3.38	16.83	3.41
	36	10.17	2.97	11.67	3.12	13.07	3.26	13.77	3.35	14.32	3.39	15.42	3.45	15.97	3.46	16.44	3.49
	38	9.93	3.13	11.32	3.29	12.61	3.44	13.23	3.52	13.72	3.55	14.70	3.62	15.17	3.65	15.56	3.68
	40	9.64	3.31	10.91	3.46	12.07	3.60	12.61	3.69	13.04	3.73	13.87	3.80	14.27	3.82	14.58	3.85
	43	9.11	3.48	10.19	3.64	11.12	3.78	11.53	3.87	11.85	3.91	12.45	3.98	12.73	4.00	12.90	5.05
	46	8.47	3.73	9.33	3.88	10.01	4.03	10.25	4.11	10.46	4.15	10.81	4.23	10.95	4.26	10.98	5.03
	48	7.98	3.88	8.68	4.04	9.17	4.18	9.30	4.27	9.42	4.31	9.59	4.39	9.63	4.42	9.56	4.11
90%	10	9.59	2.19	11.24	2.31	12.86	2.42	13.67	2.49	14.41	2.52	15.90	2.57	16.65	2.59	17.36	2.61
	12	9.59	2.18	11.24	2.31	12.86	2.42	13.67	2.50	14.41	2.53	15.90	2.57	16.65	2.59	17.36	2.61
	14	9.59	2.19	11.24	2.32	12.86	2.43	13.67	2.50	14.41	2.53	15.90	2.58	16.65	2.59	17.36	2.62
	16	9.59	2.70	11.24	2.32	12.86	2.07	13.67	1.77	14.41	2.17	15.90	2.59	16.65	2.61	17.36	2.82
	18	9.59	2.20	11.24	2.34	12.86	2.46	13.67	2.53	14.41	2.56	15.90	2.62	16.65	2.63	17.36	2.66
	20	9.59	2.24	11.24	2.37	12.86	2.49	13.67	2.56	14.41	2.59	15.90	2.64	16.65	2.65	17.36	2.68
	22	9.59	2.27	11.24	2.40	12.86	2.51	13.67	2.59	14.41	2.62	15.90	2.67	16.65	2.68	17.36	2.71
	24	9.59	2.29	11.24	2.42	12.86	2.55	13.67	2.62	14.41	2.65	15.90	2.70	16.65	2.72	17.36	2.74
	25	9.59	2.31	11.24	2.45	12.86	2.57	13.67	2.64	14.41	2.67	15.90	2.73	16.65	2.74	17.36	2.77
	26	9.60	2.32	11.24	2.45	12.84	2.58	13.65	2.65	14.37	2.69	15.83	2.73	16.56	2.75	17.24	2.78
	28	9.60	2.34	11.20	2.48	12.76	2.61	13.55	2.67	14.24	2.71	15.61	2.76	16.31	2.78	16.95	2.80
	30	9.56	2.38	11.11	2.51	12.61	2.63	13.37	2.70	14.02	2.73	15.31	2.78	15.96	2.80	16.56	2.82
	32	9.47	2.44	10.96	2.57	12.40	2.70	13.12	2.77	13.72	2.80	14.92	2.85	15.53	2.87	16.07	2.90
	34	9.33	2.50	10.76	2.64	12.12	2.76	12.79	2.84	13.34	2.87	14.45	2.92	15.00	2.94	15.48	2.96
	35	9.25	2.54	10.64	2.67	11.95	2.80	12.60	2.87	13.13	2.90	14.17	2.95	14.70	2.97	15.15	3.00
	36	9.16	2.61	10.50	2.75	11.77	2.87	12.39	2.95	12.89	2.98	13.88	3.03	14.37	3.05	14.79	3.07
	38	8.94	2.76	10.19	2.89	11.35	3.03	11.91	3.10	12.35	3.13	13.23	3.19	13.66	3.21	14.01	3.24
	40	8.67	2.92	9.82	3.05	10.86	3.17	11.35	3.25	11.74	3.28	12.48	3.34	12.85	3.36	13.12	3.39
	43	8.20	3.07	9.17	3.20	10.01	3.33	10.38	3.40	10.66	3.44	11.20	3.50	11.46	3.52	11.61	4.45
	46	7.62	3.28	8.39	3.42	9.01	3.55	9.23	3.62	9.41	3.65	9.73	3.72	9.86	3.75	9.88	4.42
	48	7.18	3.41	7.81	3.55	8.25	3.68	8.37	3.75	8.48	3.79	8.63	3.86	8.67	3.89	8.60	3.62
80%	10	8.52	1.91	9.99	2.02	11.43	2.12	12.15	2.18	12.81	2.21	14.13	2.25	14.80	2.26	15.43	2.29
	12	8.52	1.91	9.99	2.02	11.43	2.12	12.15	2.19	12.81	2.21	14.13	2.25	14.80	2.26	15.43	2.28
	14	8.52	1.92	9.99	2.03	11.43	2.13	12.15	2.19	12.81	2.21	14.13	2.26	14.80	2.27	15.43	2.29
	16	8.52	2.36	9.99	2.03	11.43	1.81	12.15	1.54	12.81	1.90	14.13	2.27	14.80	2.28	15.43	2.47
	18	8.52	1.93	9.99	2.04	11.43	2.15	12.15	2.22	12.81	2.24	14.13	2.29	14.80	2.30	15.43	2.32
	20	8.52	1.96	9.99	2.07	11.43	2.18	12.15	2.24	12.81	2.26	14.13	2.31	14.80	2.32	15.43	2.34
	22	8.52	1.98	9.99	2.10	11.43	2.20	12.15	2.26	12.81	2.29	14.13	2.33	14.80	2.35	15.43	2.37
	24	8.52	2.01	9.99	2.12	11.43	2.23	12.15	2.29	12.81	2.32	14.13	2.37	14.80	2.38	15.43	2.40
	25	8.52	2.03	9.99	2.14	11.43	2.25	12.15	2.31	12.81	2.34	14.13	2.38	14.80	2.40	15.43	2.42
	26	8.54	2.03	9.99	2.15	11.42	2.26	12.13	2.32	12.78	2.35	14.07	2.39	14.72	2.41	15.33	2.43
	28	8.54	2.05	9.96	2.17	11.35	2.28	12.04	2.34	12.65	2.37	13.88	2.42	14.49	2.43	15.07	2.45
	30	8.49	2.08	9.88	2.19	11.21	2.30	11.89	2.36	12.46	2.39	13.61	2.44	14.19	2.45	14.72	2.47
	32	8.42	2.13	9.74	2.25	11.02	2.36	11.66	2.42	12.20	2.45	13.27	2.49	13.80	2.51	14.28	2.54
	34	8.30	2.19	9.56	2.31	10.77	2.42	11.37	2.48	11.86	2.51	12.84	2.56	13.33	2.57	13.76	2.59
	35	8.22	2.22	9.46	2.34	10.62	2.45	11.20	2.51	11.67	2.54	12.60	2.58	13.06	2.60	13.47	2.63
	36	8.14	2.29	9.33	2.40	10.46	2.51	11.01	2.58	11.46	2.61	12.34	2.65	12.78	2.67	13.15	2.69
	38	7.94	2.41	9.06	2.53	10.09	2.65	10.59	2.71	10.98	2.74	11.76	2.79	12.14	2.81	12.45	2.83
	40	7.71	2.55	8.73	2.67	9.66	2.78	10.09	2.84	10.43	2.87	11.10	2.92	11.42	2.94	11.66	2.97
	43	7.29	2.68	8.15	2.80	8.90	2.91	9.22	2.98	9.48	3.01	9.96	3.06	10.18	3.08	10.32	3.89
	46	6.77	2.87	7.46	2.99	8.01	3.10	8.20	3.17	8.37	3.20	8.65	3.26	8.76	3.28	8.78	3.87
	48	6.38	2.99	6.94	3.11	7.34	3.22	7.44	3.29	7.54	3.32	7.67	3.38	7.71	3.40	7.65	3.16

RAS-5FS(V)NME

	To/ Ti	14		16		18		19		20		22		23		24	
		CAP	IPT	CAP	IPT	CAP	IPT	CAP	IPT	CAP	IPT	CAP	IPT	CAP	IPT	CAP	IPT
70%	10	7.46	1.64	8.74	1.73	10.00	1.82	10.63	1.87	11.21	1.89	12.37	1.93	12.95	1.94	13.50	1.96
	12	7.46	1.64	8.74	1.73	10.00	1.82	10.63	1.87	11.21	1.90	12.37	1.93	12.95	1.94	13.50	1.96
	14	7.46	1.64	8.74	1.74	10.00	1.82	10.63	1.87	11.21	1.90	12.37	1.93	12.95	1.95	13.50	1.96
	16	7.46	2.03	8.74	1.74	10.00	1.55	10.63	1.32	11.21	1.63	12.37	1.95	12.95	1.96	13.50	2.12
	18	7.46	1.65	8.74	1.75	10.00	1.85	10.63	1.90	11.21	1.92	12.37	1.96	12.95	1.97	13.50	1.99
	20	7.46	1.68	8.74	1.77	10.00	1.87	10.63	1.92	11.21	1.94	12.37	1.98	12.95	1.99	13.50	2.01
	22	7.46	1.70	8.74	1.80	10.00	1.88	10.63	1.94	11.21	1.96	12.37	2.00	12.95	2.01	13.50	2.03
	24	7.46	1.72	8.74	1.82	10.00	1.91	10.63	1.97	11.21	1.99	12.37	2.03	12.95	2.04	13.50	2.06
	25	7.46	1.74	8.74	1.84	10.00	1.93	10.63	1.98	11.21	2.01	12.37	2.04	12.95	2.05	13.50	2.07
	26	7.47	1.74	8.74	1.84	9.99	1.93	10.61	1.99	11.18	2.02	12.31	2.05	12.88	2.07	13.41	2.08
	28	7.47	1.76	8.71	1.86	9.93	1.96	10.54	2.01	11.07	2.03	12.14	2.07	12.68	2.08	13.18	2.10
	30	7.43	1.78	8.64	1.88	9.81	1.97	10.40	2.02	10.90	2.05	11.91	2.09	12.42	2.10	12.88	2.12
	32	7.36	1.83	8.53	1.93	9.64	2.02	10.20	2.08	10.67	2.10	11.61	2.14	12.08	2.15	12.50	2.17
	34	7.26	1.88	8.37	1.98	9.42	2.07	9.95	2.13	10.38	2.15	11.24	2.19	11.66	2.20	12.04	2.22
	35	7.20	1.91	8.27	2.01	9.29	2.10	9.80	2.15	10.21	2.18	11.02	2.21	11.43	2.23	11.78	2.25
	36	7.12	1.96	8.17	2.06	9.15	2.15	9.64	2.21	10.02	2.24	10.80	2.27	11.18	2.29	11.51	2.30
	38	6.95	2.07	7.92	2.17	8.83	2.27	9.26	2.32	9.61	2.35	10.29	2.39	10.62	2.41	10.89	2.43
	40	6.75	2.19	7.64	2.29	8.45	2.38	8.83	2.43	9.13	2.46	9.71	2.51	9.99	2.52	10.21	2.54
	43	6.37	2.30	7.13	2.40	7.79	2.50	8.07	2.55	8.29	2.58	8.71	2.63	8.91	2.64	9.03	3.33
	46	5.93	2.46	6.53	2.56	7.01	2.66	7.18	2.71	7.32	2.74	7.57	2.79	7.67	2.81	7.69	3.32
	48	5.59	2.56	6.07	2.66	6.42	2.76	6.51	2.82	6.60	2.84	6.71	2.90	6.74	2.92	6.69	2.71
60%	10	6.39	1.42	7.50	1.49	8.57	1.57	9.11	1.61	9.61	1.63	10.60	1.67	11.10	1.68	11.57	1.69
	12	6.39	1.41	7.50	1.49	8.57	1.57	9.11	1.62	9.61	1.64	10.60	1.67	11.10	1.68	11.57	1.69
	14	6.39	1.42	7.50	1.50	8.57	1.58	9.11	1.62	9.61	1.64	10.60	1.67	11.10	1.68	11.57	1.70
	16	6.39	1.75	7.50	1.50	8.57	1.34	9.11	1.14	9.61	1.40	10.60	1.68	11.10	1.69	11.57	1.83
	18	6.39	1.43	7.50	1.51	8.57	1.59	9.11	1.64	9.61	1.66	10.60	1.69	11.10	1.70	11.57	1.72
	20	6.39	1.45	7.50	1.53	8.57	1.61	9.11	1.66	9.61	1.68	10.60	1.71	11.10	1.72	11.57	1.73
	22	6.39	1.47	7.50	1.55	8.57	1.63	9.11	1.68	9.61	1.69	10.60	1.73	11.10	1.74	11.57	1.75
	24	6.39	1.48	7.50	1.57	8.57	1.65	9.11	1.70	9.61	1.72	10.60	1.75	11.10	1.76	11.57	1.78
	25	6.39	1.50	7.50	1.58	8.57	1.67	9.11	1.71	9.61	1.73	10.60	1.77	11.10	1.77	11.57	1.79
	26	6.40	1.50	7.50	1.59	8.56	1.67	9.10	1.72	9.58	1.74	10.55	1.77	11.04	1.78	11.50	1.80
	28	6.40	1.52	7.47	1.60	8.51	1.69	9.03	1.73	9.49	1.76	10.41	1.79	10.87	1.80	11.30	1.82
	30	6.37	1.54	7.41	1.62	8.41	1.70	8.91	1.75	9.35	1.77	10.21	1.80	10.64	1.81	11.04	1.83
	32	6.31	1.58	7.31	1.67	8.27	1.75	8.75	1.79	9.15	1.81	9.95	1.85	10.35	1.86	10.71	1.88
	34	6.22	1.62	7.17	1.71	8.08	1.79	8.53	1.84	8.90	1.86	9.63	1.89	10.00	1.90	10.32	1.92
	35	6.17	1.65	7.09	1.73	7.97	1.81	8.40	1.86	8.75	1.88	9.45	1.91	9.80	1.93	10.10	1.94
	36	6.10	1.69	7.00	1.78	7.84	1.86	8.26	1.91	8.59	1.93	9.25	1.96	9.58	1.97	9.86	1.99
	38	5.96	1.79	6.79	1.87	7.57	1.96	7.94	2.01	8.23	2.03	8.82	2.06	9.10	2.08	9.34	2.10
	40	5.78	1.89	6.55	1.97	7.24	2.05	7.57	2.10	7.82	2.13	8.32	2.16	8.56	2.18	8.75	2.20
	43	5.46	1.99	6.11	2.07	6.67	2.16	6.92	2.20	7.11	2.23	7.47	2.27	7.64	2.28	7.74	2.88
	46	5.08	2.12	5.60	2.21	6.00	2.30	6.15	2.34	6.28	2.37	6.48	2.41	6.57	2.43	6.59	2.86
	48	4.79	2.21	5.21	2.30	5.50	2.38	5.58	2.43	5.65	2.46	5.75	2.50	5.78	2.52	5.74	2.34
50%	10	5.33	1.17	6.25	1.23	7.14	1.30	7.59	1.33	8.01	1.35	8.83	1.37	9.25	1.38	9.64	1.39
	12	5.33	1.16	6.25	1.23	7.14	1.30	7.59	1.33	8.01	1.35	8.83	1.37	9.25	1.38	9.64	1.39
	14	5.33	1.17	6.25	1.24	7.14	1.30	7.59	1.33	8.01	1.35	8.83	1.38	9.25	1.39	9.64	1.40
	16	5.33	1.44	6.25	1.24	7.14	1.11	7.59	0.94	8.01	1.16	8.83	1.39	9.25	1.39	9.64	1.51
	18	5.33	1.18	6.25	1.25	7.14	1.31	7.59	1.35	8.01	1.37	8.83	1.40	9.25	1.40	9.64	1.42
	20	5.33	1.20	6.25	1.26	7.14	1.33	7.59	1.37	8.01	1.38	8.83	1.41	9.25	1.42	9.64	1.43
	22	5.33	1.21	6.25	1.28	7.14	1.34	7.59	1.38	8.01	1.40	8.83	1.42	9.25	1.43	9.64	1.45
	24	5.33	1.22	6.25	1.30	7.14	1.36	7.59	1.40	8.01	1.42	8.83	1.44	9.25	1.45	9.64	1.47
	25	5.33	1.24	6.25	1.31	7.14	1.37	7.59	1.41	8.01	1.43	8.83	1.46	9.25	1.46	9.64	1.48
	26	5.34	1.24	6.25	1.31	7.14	1.38	7.58	1.42	7.99	1.44	8.79	1.46	9.20	1.47	9.58	1.48
	28	5.33	1.25	6.22	1.32	7.09	1.39	7.53	1.43	7.91	1.45	8.67	1.48	9.06	1.48	9.42	1.50
	30	5.31	1.27	6.17	1.34	7.01	1.40	7.43	1.44	7.79	1.46	8.51	1.49	8.87	1.49	9.20	1.51
	32	5.26	1.30	6.09	1.37	6.89	1.44	7.29	1.48	7.62	1.49	8.29	1.52	8.63	1.53	8.93	1.55
	34	5.19	1.34	5.98	1.41	6.73	1.48	7.11	1.51	7.41	1.53	8.03	1.56	8.33	1.57	8.60	1.58
	35	5.14	1.36	5.91	1.43	6.64	1.49	7.00	1.53	7.29	1.55	7.87	1.58	8.16	1.59	8.42	1.60
	36	5.09	1.40	5.83	1.47	6.54	1.53	6.88	1.57	7.16	1.59	7.71	1.62	7.98	1.63	8.22	1.64
	38	4.97	1.47	5.66	1.55	6.30	1.62	6.62	1.66	6.86	1.67	7.35	1.70	7.59	1.71	7.78	1.73
	40	4.82	1.56	5.46	1.63	6.04	1.69	6.31	1.73	6.52	1.75	6.94	1.78	7.14	1.80	7.29	1.81
	43	4.55	1.64	5.09	1.71	5.56	1.78	5.76	1.82	5.92	1.84	6.22	1.87	6.36	1.88	6.45	2.37
	46	4.23	1.75	4.66	1.82	5.00	1.89	5.13	1.93	5.23	1.95	5.40	1.99	5.48	2.00	5.49	2.36
	48	3.99	1.82	4.34	1.90	4.59	1.97	4.65	2.01	4.71	2.03	4.80	2.06	4.82	2.08	4.78	1.93

◆ RAS-6FS(V)NME

	To/ Ti	14		16		18		19		20		22		23		24	
		CAP	IPT	CAP	IPT	CAP	IPT	CAP	IPT	CAP	IPT	CAP	IPT	CAP	IPT	CAP	IPT
130%	10	12.47	3.46	14.26	3.66	15.90	3.85	16.72	3.96	17.24	4.01	18.30	4.08	18.83	4.11	19.20	4.15
	12	12.47	3.45	14.26	3.66	15.90	3.86	16.72	3.97	17.24	4.01	18.30	4.08	18.83	4.11	19.20	4.15
	14	12.47	3.46	14.26	3.67	15.90	3.87	16.72	3.98	17.24	4.02	18.30	4.09	18.83	4.12	19.20	4.16
	16	12.47	4.63	14.26	3.70	15.90	3.05	16.72	2.33	17.24	3.22	18.30	4.11	18.83	4.14	19.20	4.59
	18	12.47	3.52	14.26	3.72	15.90	3.92	16.72	4.03	17.24	4.08	18.30	4.15	18.83	4.18	19.20	4.22
	20	12.47	3.56	14.26	3.76	15.90	3.96	16.72	4.06	17.24	4.11	18.30	4.18	18.83	4.22	19.20	4.25
	22	12.47	3.61	14.26	3.80	15.90	4.00	16.72	4.10	17.24	4.15	18.30	4.24	18.83	4.27	19.20	4.31
	24	12.47	3.65	14.26	3.86	15.90	4.05	16.72	4.16	17.24	4.22	18.30	4.30	18.83	4.32	19.20	4.36
	25	12.47	3.68	14.26	3.89	15.90	4.08	16.72	4.20	17.24	4.25	18.30	4.33	18.83	4.36	19.20	4.40
	26	12.48	3.70	14.26	3.91	15.88	4.10	16.69	4.22	17.22	4.27	18.27	4.35	18.80	4.38	19.17	4.42
	28	12.48	3.73	14.22	3.94	15.82	4.14	16.61	4.26	17.13	4.31	18.18	4.39	18.70	4.41	19.07	4.45
	30	12.44	3.77	14.14	3.98	15.71	4.17	16.49	4.29	17.00	4.34	18.03	4.42	18.54	4.45	18.91	4.49
	32	12.36	3.87	14.03	4.08	15.56	4.29	16.33	4.40	16.83	4.45	17.82	4.53	18.32	4.57	18.68	4.61
	34	12.26	3.98	13.88	4.20	15.37	4.40	16.12	4.51	16.60	4.57	17.57	4.64	18.05	4.67	18.40	4.70
	35	12.19	4.03	13.80	4.25	15.27	4.45	16.00	4.57	16.47	4.62	17.42	4.70	17.89	4.73	18.23	4.77
	36	12.12	4.16	13.70	4.37	15.15	4.57	15.87	4.69	16.33	4.74	17.26	4.82	17.72	4.85	18.05	4.89
	38	11.94	4.39	13.48	4.61	14.88	4.81	15.58	4.93	16.02	4.98	16.89	5.07	17.33	5.10	17.64	5.15
	40	11.73	4.63	13.22	4.84	14.57	5.05	15.24	5.16	15.65	5.21	16.48	5.32	16.89	5.35	17.16	5.40
	43	11.36	4.88	12.76	5.09	14.03	5.30	14.66	5.41	15.02	5.46	15.75	5.57	16.11	5.60	16.33	6.24
	46	10.91	5.22	12.23	5.43	13.39	5.64	13.98	5.75	14.29	5.80	14.90	5.93	15.20	5.96	15.37	6.21
	48	10.57	5.44	11.82	5.65	12.92	5.86	13.47	5.97	13.74	6.02	14.27	6.15	14.53	6.18	14.64	5.07
120%	10	12.47	3.39	14.26	3.59	15.90	3.77	16.72	3.88	17.24	3.93	18.30	4.00	18.83	4.03	19.20	4.07
	12	12.47	3.39	14.26	3.59	15.90	3.78	16.72	3.89	17.24	3.93	18.30	4.00	18.83	4.03	19.20	4.07
	14	12.47	3.40	14.26	3.60	15.90	3.79	16.72	3.90	17.24	3.94	18.30	4.01	18.83	4.04	19.20	4.08
	16	12.47	4.54	14.26	3.63	15.90	3.00	16.72	2.29	17.24	3.16	18.30	4.03	18.83	4.06	19.20	4.50
	18	12.47	3.45	14.26	3.65	15.90	3.84	16.72	3.95	17.24	4.00	18.30	4.07	18.83	4.11	19.20	4.14
	20	12.47	3.50	14.26	3.69	15.90	3.88	16.72	3.98	17.24	4.03	18.30	4.11	18.83	4.14	19.20	4.17
	22	12.47	3.54	14.26	3.73	15.90	3.92	16.72	4.02	17.24	4.07	18.30	4.16	18.83	4.19	19.20	4.23
	24	12.47	3.58	14.26	3.78	15.90	3.97	16.72	4.08	17.24	4.14	18.30	4.22	18.83	4.24	19.20	4.28
	25	12.47	3.61	14.26	3.81	15.90	4.00	16.72	4.12	17.24	4.17	18.30	4.25	18.83	4.28	19.20	4.32
	26	12.48	3.63	14.26	3.83	15.88	4.02	16.69	4.14	17.22	4.19	18.27	4.27	18.80	4.30	19.17	4.34
	28	12.48	3.65	14.22	3.86	15.82	4.06	16.61	4.18	17.13	4.23	18.18	4.31	18.70	4.33	19.07	4.37
	30	12.44	3.70	14.14	3.90	15.71	4.09	16.49	4.21	17.00	4.26	18.03	4.34	18.54	4.37	18.91	4.41
	32	12.36	3.80	14.03	4.00	15.56	4.21	16.33	4.32	16.83	4.37	17.82	4.45	18.32	4.48	18.68	4.52
	34	12.26	3.91	13.88	4.12	15.37	4.32	16.12	4.43	16.60	4.48	17.57	4.55	18.05	4.58	18.40	4.61
	35	12.19	3.96	13.80	4.17	15.27	4.37	16.00	4.48	16.47	4.53	17.42	4.61	17.89	4.64	18.23	4.68
	36	12.12	4.08	13.70	4.29	15.15	4.48	15.87	4.60	16.33	4.65	17.26	4.73	17.72	4.76	18.05	4.80
	38	11.94	4.31	13.48	4.52	14.88	4.72	15.58	4.83	16.02	4.88	16.89	4.97	17.33	5.00	17.64	5.05
	40	11.73	4.54	13.22	4.75	14.57	4.95	15.24	5.06	15.65	5.11	16.48	5.21	16.89	5.24	17.16	5.30
	43	11.36	4.79	12.76	5.00	14.03	5.20	14.66	5.31	15.02	5.36	15.75	5.47	16.11	5.50	16.33	6.12
	46	10.91	5.12	12.23	5.33	13.39	5.53	13.98	5.64	14.29	5.69	14.90	5.81	15.20	5.84	15.37	6.09
	48	10.57	5.33	11.82	5.54	12.92	5.74	13.47	5.86	13.74	5.91	14.27	6.03	14.53	6.06	14.64	4.98
110%	10	12.47	3.36	14.26	3.56	15.90	3.74	16.72	3.85	17.24	3.90	18.30	3.97	18.83	4.00	19.20	4.03
	12	12.47	3.36	14.26	3.56	15.90	3.75	16.72	3.86	17.24	3.90	18.30	3.97	18.83	4.00	19.20	4.03
	14	12.47	3.37	14.26	3.57	15.90	3.76	16.72	3.87	17.24	3.91	18.30	3.98	18.83	4.01	19.20	4.04
	16	12.47	4.50	14.26	3.60	15.90	2.97	16.72	2.27	17.24	3.13	18.30	4.00	18.83	4.03	19.20	4.46
	18	12.47	3.42	14.26	3.62	15.90	3.81	16.72	3.92	17.24	3.97	18.30	4.04	18.83	4.07	19.20	4.10
	20	12.47	3.46	14.26	3.66	15.90	3.85	16.72	3.95	17.24	4.00	18.30	4.07	18.83	4.10	19.20	4.13
	22	12.47	3.50	14.26	3.70	15.90	3.89	16.72	3.99	17.24	4.04	18.30	4.12	18.83	4.15	19.20	4.19
	24	12.47	3.55	14.26	3.75	15.90	3.94	16.72	4.05	17.24	4.10	18.30	4.18	18.83	4.20	19.20	4.24
	25	12.47	3.58	14.26	3.78	15.90	3.97	16.72	4.08	17.24	4.13	18.30	4.21	18.83	4.24	19.20	4.27
	26	12.48	3.60	14.26	3.80	15.88	3.99	16.69	4.10	17.22	4.15	18.27	4.23	18.80	4.25	19.17	4.29
	28	12.48	3.62	14.22	3.83	15.82	4.03	16.61	4.14	17.13	4.19	18.18	4.26	18.70	4.28	19.07	4.32
	30	12.44	3.66	14.14	3.87	15.71	4.06	16.49	4.17	17.00	4.22	18.03	4.29	18.54	4.32	18.91	4.36
	32	12.36	3.76	14.03	3.97	15.56	4.17	16.33	4.27	16.83	4.32	17.82	4.40	18.32	4.43	18.68	4.47
	34	12.26	3.87	13.88	4.08	15.37	4.27	16.12	4.38	16.60	4.43	17.57	4.50	18.05	4.53	18.40	4.57
	35	12.19	3.92	13.80	4.13	15.27	4.32	16.00	4.43	16.47	4.48	17.42	4.56	17.89	4.59	18.23	4.63
	36	12.12	4.04	13.70	4.25	15.15	4.43	15.87	4.55	16.33	4.60	17.26	4.68	17.72	4.71	18.05	4.75
	38	11.94	4.27	13.48	4.47	14.88	4.67	15.58	4.78	16.02	4.83	16.89	4.92	17.33	4.95	17.64	5.00
	40	11.73	4.50	13.22	4.70	14.57	4.90	15.24	5.01	15.65	5.06	16.48	5.16	16.89	5.19	17.16	5.24
	43	11.36	4.74	12.76	4.95	14.03	5.15	14.66	5.26	15.02	5.31	15.75	5.41	16.11	5.44	16.33	6.06
	46	10.91	5.07	12.23	5.28	13.39	5.48	13.98	5.59	14.29	5.64	14.90	5.76	15.20	5.79	15.37	6.03
	48	10.57	5.28	11.82	5.49	12.92	5.69	13.47	5.80	13.74	5.85	14.27	5.97	14.53	6.00	14.64	4.93

RAS-6FS(V)NME

	To/ Ti	14		16		18		19		20		22		23		24	
		CAP	IPT	CAP	IPT	CAP	IPT	CAP	IPT	CAP	IPT	CAP	IPT	CAP	IPT	CAP	IPT
100%	10	12.47	3.30	14.26	3.49	15.90	3.66	16.72	3.77	17.24	3.82	18.30	3.89	18.83	3.92	19.20	3.95
	12	12.47	3.29	14.26	3.49	15.90	3.67	16.72	3.78	17.24	3.82	18.30	3.89	18.83	3.92	19.20	3.95
	14	12.47	3.30	14.26	3.50	15.90	3.68	16.72	3.79	17.24	3.83	18.30	3.90	18.83	3.93	19.20	3.96
	16	12.47	4.41	14.26	3.53	15.90	2.91	16.72	2.22	17.24	3.07	18.30	3.92	18.83	3.95	19.20	4.37
	18	12.47	3.35	14.26	3.54	15.90	3.73	16.72	3.84	17.24	3.89	18.30	3.96	18.83	3.99	19.20	4.02
	20	12.47	3.39	14.26	3.58	15.90	3.77	16.72	3.87	17.24	3.92	18.30	3.99	18.83	4.01	19.20	4.05
	22	12.47	3.43	14.26	3.62	15.90	3.81	16.72	3.91	17.24	3.96	18.30	4.03	18.83	4.06	19.20	4.10
	24	12.47	3.48	14.26	3.67	15.90	3.86	16.72	3.97	17.24	4.01	18.30	4.09	18.83	4.11	19.20	4.15
	25	12.47	3.50	14.26	3.70	15.90	3.89	16.72	4.00	17.24	4.04	18.30	4.12	18.83	4.15	19.20	4.19
	26	12.48	3.52	14.26	3.72	15.88	3.91	16.69	4.01	17.22	4.06	18.27	4.14	18.80	4.17	19.17	4.21
	28	12.48	3.55	14.22	3.75	15.82	3.95	16.61	4.05	17.13	4.10	18.18	4.18	18.70	4.20	19.07	4.24
	30	12.44	3.59	14.14	3.79	15.71	3.98	16.49	4.08	17.00	4.13	18.03	4.21	18.54	4.24	18.91	4.28
	32	12.36	3.68	14.03	3.89	15.56	4.08	16.33	4.19	16.83	4.24	17.82	4.32	18.32	4.35	18.68	4.39
	34	12.26	3.79	13.88	4.00	15.37	4.19	16.12	4.30	16.60	4.35	17.57	4.42	18.05	4.45	18.40	4.48
	35	12.19	3.84	13.80	4.04	15.27	4.24	16.00	4.35	16.47	4.40	17.42	4.48	17.89	4.50	18.23	4.54
	36	12.12	3.96	13.70	4.16	15.15	4.35	15.87	4.47	16.33	4.51	17.26	4.59	17.72	4.62	18.05	4.66
	38	11.94	4.18	13.48	4.39	14.88	4.58	15.58	4.69	16.02	4.74	16.89	4.83	17.33	4.86	17.64	4.90
	40	11.73	4.41	13.22	4.61	14.57	4.81	15.24	4.92	15.65	4.96	16.48	5.06	16.89	5.09	17.16	5.14
	43	11.36	4.65	12.76	4.85	14.03	5.05	14.66	5.16	15.02	5.20	15.75	5.31	16.11	5.34	16.33	5.94
	46	10.91	4.97	12.23	5.17	13.39	5.37	13.98	5.48	14.29	5.53	14.90	5.64	15.20	5.67	15.37	5.91
	48	10.57	5.18	11.82	5.38	12.92	5.58	13.47	5.69	13.74	5.73	14.27	5.86	14.53	5.89	14.64	4.83
90%	10	11.23	2.90	12.84	3.07	14.31	3.22	15.04	3.32	15.52	3.36	16.47	3.42	16.94	3.45	17.28	3.48
	12	11.23	2.89	12.84	3.07	14.31	3.23	15.04	3.33	15.52	3.36	16.47	3.42	16.94	3.45	17.28	3.48
	14	11.23	2.90	12.84	3.08	14.31	3.24	15.04	3.33	15.52	3.37	16.47	3.43	16.94	3.46	17.28	3.49
	16	11.23	3.88	12.84	3.10	14.31	2.56	15.04	1.96	15.52	2.70	16.47	3.45	16.94	3.47	17.28	3.85
	18	11.23	2.95	12.84	3.12	14.31	3.28	15.04	3.38	15.52	3.42	16.47	3.48	16.94	3.51	17.28	3.54
	20	11.23	2.99	12.84	3.15	14.31	3.32	15.04	3.40	15.52	3.45	16.47	3.51	16.94	3.53	17.28	3.56
	22	11.23	3.02	12.84	3.19	14.31	3.35	15.04	3.44	15.52	3.48	16.47	3.55	16.94	3.58	17.28	3.61
	24	11.23	3.06	12.84	3.23	14.31	3.40	15.04	3.49	15.52	3.53	16.47	3.60	16.94	3.62	17.28	3.65
	25	11.23	3.08	12.84	3.26	14.31	3.42	15.04	3.52	15.52	3.56	16.47	3.63	16.94	3.65	17.28	3.69
	26	11.23	3.10	12.83	3.27	14.29	3.44	15.02	3.53	15.50	3.58	16.44	3.65	16.92	3.67	17.26	3.71
	28	11.23	3.12	12.80	3.30	14.23	3.47	14.95	3.57	15.42	3.61	16.36	3.68	16.83	3.70	17.17	3.73
	30	11.19	3.16	12.73	3.33	14.14	3.50	14.84	3.59	15.30	3.64	16.22	3.71	16.69	3.73	17.02	3.77
	32	11.13	3.24	12.63	3.42	14.01	3.59	14.69	3.69	15.14	3.73	16.04	3.80	16.49	3.83	16.82	3.86
	34	11.03	3.34	12.50	3.52	13.84	3.69	14.51	3.78	14.94	3.83	15.81	3.89	16.25	3.91	16.56	3.94
	35	10.97	3.38	12.42	3.56	13.74	3.73	14.40	3.83	14.83	3.87	15.68	3.94	16.10	3.96	16.41	4.00
	36	10.90	3.48	12.33	3.66	13.63	3.83	14.28	3.93	14.70	3.97	15.53	4.04	15.95	4.07	16.24	4.10
	38	10.75	3.68	12.13	3.86	13.39	4.03	14.02	4.13	14.41	4.17	15.20	4.25	15.60	4.27	15.87	4.31
	40	10.56	3.88	11.90	4.06	13.11	4.23	13.72	4.33	14.09	4.37	14.83	4.46	15.20	4.48	15.44	4.52
	43	10.22	4.09	11.49	4.27	12.62	4.44	13.19	4.54	13.52	4.58	14.17	4.67	14.50	4.70	14.70	5.23
	46	9.82	4.38	11.00	4.55	12.06	4.73	12.58	4.82	12.86	4.86	13.41	4.97	13.68	4.99	13.83	5.20
	48	9.51	4.56	10.64	4.74	11.63	4.91	12.12	5.00	12.36	5.05	12.84	5.15	13.08	5.18	13.18	4.25
80%	10	9.98	2.54	11.41	2.68	12.72	2.82	13.37	2.90	13.80	2.94	14.64	2.99	15.06	3.02	15.36	3.04
	12	9.98	2.53	11.41	2.68	12.72	2.83	13.37	2.91	13.80	2.94	14.64	2.99	15.06	3.02	15.36	3.04
	14	9.98	2.54	11.41	2.69	12.72	2.84	13.37	2.92	13.80	2.95	14.64	3.00	15.06	3.02	15.36	3.05
	16	9.98	3.40	11.41	2.71	12.72	2.24	13.37	1.71	13.80	2.36	14.64	3.02	15.06	3.04	15.36	3.37
	18	9.98	2.58	11.41	2.73	12.72	2.87	13.37	2.96	13.80	2.99	14.64	3.05	15.06	3.07	15.36	3.10
	20	9.98	2.61	11.41	2.76	12.72	2.90	13.37	2.98	13.80	3.02	14.64	3.07	15.06	3.09	15.36	3.12
	22	9.98	2.64	11.41	2.79	12.72	2.93	13.37	3.01	13.80	3.05	14.64	3.11	15.06	3.13	15.36	3.16
	24	9.98	2.68	11.41	2.83	12.72	2.97	13.37	3.05	13.80	3.09	14.64	3.15	15.06	3.17	15.36	3.20
	25	9.98	2.70	11.41	2.85	12.72	2.99	13.37	3.08	13.80	3.11	14.64	3.17	15.06	3.20	15.36	3.23
	26	9.99	2.71	11.41	2.87	12.70	3.01	13.35	3.09	13.78	3.13	14.62	3.19	15.04	3.21	15.34	3.24
	28	9.98	2.73	11.37	2.89	12.65	3.04	13.29	3.12	13.71	3.16	14.54	3.22	14.96	3.23	15.26	3.26
	30	9.95	2.77	11.31	2.92	12.57	3.06	13.19	3.14	13.60	3.18	14.42	3.24	14.83	3.26	15.13	3.30
	32	9.89	2.84	11.23	2.99	12.45	3.14	13.06	3.23	13.46	3.26	14.26	3.33	14.66	3.35	14.95	3.38
	34	9.80	2.92	11.11	3.08	12.30	3.23	12.90	3.31	13.28	3.35	14.05	3.40	14.44	3.42	14.72	3.45
	35	9.75	2.96	11.04	3.11	12.21	3.26	12.80	3.35	13.18	3.39	13.94	3.45	14.31	3.47	14.58	3.50
	36	9.69	3.05	10.96	3.20	12.12	3.35	12.70	3.44	13.07	3.48	13.81	3.54	14.18	3.56	14.44	3.59
	38	9.55	3.22	10.78	3.38	11.90	3.53	12.46	3.61	12.81	3.65	13.51	3.72	13.87	3.74	14.11	3.77
	40	9.39	3.40	10.58	3.55	11.65	3.70	12.19	3.79	12.52	3.82	13.18	3.90	13.51	3.92	13.73	3.96
	43	9.09	3.58	10.21	3.74	11.22	3.89	11.73	3.97	12.02	4.01	12.60	4.09	12.89	4.11	13.07	4.57
	46	8.73	3.83	9.78	3.98	10.72	4.13	11.18	4.22	11.43	4.26	11.92	4.35	12.16	4.37	12.29	4.55
	48	8.46	3.99	9.46	4.14	10.34	4.29	10.78	4.38	10.99	4.42	11.41	4.51	11.62	4.53	11.71	3.72

RAS-6FS(V)NME

	To/ Ti	14		16		18		19		20		22		23		24	
		CAP	IPT	CAP	IPT	CAP	IPT	CAP	IPT	CAP	IPT	CAP	IPT	CAP	IPT	CAP	IPT
70%	10	8.73	2.18	9.98	2.30	11.13	2.42	11.70	2.49	12.07	2.52	12.81	2.57	13.18	2.59	13.44	2.61
	12	8.73	2.17	9.98	2.30	11.13	2.42	11.70	2.49	12.07	2.52	12.81	2.57	13.18	2.59	13.44	2.61
	14	8.73	2.18	9.98	2.31	11.13	2.43	11.70	2.50	12.07	2.53	12.81	2.57	13.18	2.59	13.44	2.61
	16	8.73	2.91	9.98	2.33	11.13	1.92	11.70	1.47	12.07	2.02	12.81	2.59	13.18	2.60	13.44	2.89
	18	8.73	2.21	9.98	2.34	11.13	2.46	11.70	2.53	12.07	2.57	12.81	2.61	13.18	2.63	13.44	2.65
	20	8.73	2.24	9.98	2.37	11.13	2.49	11.70	2.55	12.07	2.59	12.81	2.63	13.18	2.65	13.44	2.67
	22	8.73	2.27	9.98	2.39	11.13	2.51	11.70	2.58	12.07	2.61	12.81	2.66	13.18	2.68	13.44	2.71
	24	8.73	2.29	9.98	2.42	11.13	2.55	11.70	2.62	12.07	2.65	12.81	2.70	13.18	2.71	13.44	2.74
	25	8.73	2.31	9.98	2.44	11.13	2.57	11.70	2.64	12.07	2.67	12.81	2.72	13.18	2.74	13.44	2.77
	26	8.74	2.33	9.98	2.46	11.12	2.58	11.69	2.65	12.05	2.68	12.79	2.73	13.16	2.75	13.42	2.78
	28	8.73	2.34	9.95	2.48	11.07	2.60	11.63	2.68	11.99	2.71	12.72	2.76	13.09	2.77	13.35	2.80
	30	8.71	2.37	9.90	2.50	11.00	2.62	11.54	2.70	11.90	2.73	12.62	2.78	12.98	2.80	13.24	2.82
	32	8.65	2.43	9.82	2.57	10.89	2.70	11.43	2.77	11.78	2.80	12.48	2.85	12.83	2.87	13.08	2.90
	34	8.58	2.50	9.72	2.64	10.76	2.77	11.28	2.84	11.62	2.87	12.30	2.91	12.64	2.93	12.88	2.96
	35	8.53	2.54	9.66	2.67	10.69	2.80	11.20	2.87	11.53	2.90	12.19	2.95	12.52	2.97	12.76	3.00
	36	8.48	2.61	9.59	2.75	10.60	2.87	11.11	2.95	11.43	2.98	12.08	3.03	12.40	3.05	12.63	3.08
	38	8.36	2.76	9.43	2.90	10.41	3.02	10.90	3.10	11.21	3.13	11.83	3.19	12.13	3.21	12.34	3.23
	40	8.21	2.91	9.25	3.04	10.20	3.17	10.67	3.24	10.96	3.28	11.53	3.34	11.82	3.36	12.01	3.39
	43	7.95	3.07	8.93	3.20	9.82	3.33	10.26	3.40	10.52	3.43	11.02	3.50	11.28	3.52	11.43	3.92
	46	7.64	3.28	8.56	3.42	9.38	3.54	9.78	3.62	10.00	3.65	10.43	3.73	10.64	3.74	10.76	3.90
	48	7.40	3.42	8.28	3.55	9.05	3.68	9.43	3.75	9.62	3.78	9.99	3.87	10.17	3.89	10.25	3.19
60%	10	7.48	1.88	8.56	1.99	9.54	2.09	10.03	2.15	10.35	2.18	10.98	2.22	11.30	2.23	11.52	2.25
	12	7.48	1.88	8.56	1.99	9.54	2.09	10.03	2.15	10.35	2.18	10.98	2.22	11.30	2.23	11.52	2.25
	14	7.48	1.88	8.56	1.99	9.54	2.10	10.03	2.16	10.35	2.18	10.98	2.22	11.30	2.24	11.52	2.26
	16	7.48	2.51	8.56	2.01	9.54	1.66	10.03	1.27	10.35	1.75	10.98	2.23	11.30	2.25	11.52	2.49
	18	7.48	1.91	8.56	2.02	9.54	2.13	10.03	2.19	10.35	2.22	10.98	2.25	11.30	2.27	11.52	2.29
	20	7.48	1.93	8.56	2.04	9.54	2.15	10.03	2.20	10.35	2.23	10.98	2.27	11.30	2.29	11.52	2.31
	22	7.48	1.96	8.56	2.07	9.54	2.17	10.03	2.23	10.35	2.25	10.98	2.30	11.30	2.32	11.52	2.34
	24	7.48	1.98	8.56	2.09	9.54	2.20	10.03	2.26	10.35	2.29	10.98	2.33	11.30	2.34	11.52	2.37
	25	7.48	2.00	8.56	2.11	9.54	2.22	10.03	2.28	10.35	2.31	10.98	2.35	11.30	2.37	11.52	2.39
	26	7.49	2.01	8.55	2.12	9.53	2.23	10.02	2.29	10.33	2.32	10.96	2.36	11.28	2.38	11.50	2.40
	28	7.49	2.02	8.53	2.14	9.49	2.25	9.97	2.31	10.28	2.34	10.91	2.38	11.22	2.39	11.44	2.42
	30	7.46	2.05	8.49	2.16	9.43	2.27	9.90	2.33	10.20	2.36	10.82	2.40	11.12	2.42	11.35	2.44
	32	7.42	2.10	8.42	2.22	9.34	2.33	9.80	2.39	10.10	2.42	10.69	2.46	10.99	2.48	11.21	2.50
	34	7.35	2.16	8.33	2.28	9.22	2.39	9.67	2.45	9.96	2.48	10.54	2.52	10.83	2.53	11.04	2.55
	35	7.31	2.19	8.28	2.31	9.16	2.42	9.60	2.48	9.88	2.51	10.45	2.55	10.74	2.57	10.94	2.59
	36	7.27	2.26	8.22	2.37	9.09	2.48	9.52	2.55	9.80	2.57	10.35	2.62	10.63	2.63	10.83	2.66
	38	7.16	2.38	8.09	2.50	8.93	2.61	9.35	2.67	9.61	2.70	10.14	2.75	10.40	2.77	10.58	2.79
	40	7.04	2.51	7.93	2.63	8.74	2.74	9.14	2.80	9.39	2.83	9.89	2.89	10.13	2.90	10.30	2.93
	43	6.82	2.65	7.66	2.77	8.42	2.88	8.79	2.94	9.01	2.97	9.45	3.02	9.67	3.04	9.80	3.39
	46	6.55	2.83	7.34	2.95	8.04	3.06	8.39	3.12	8.57	3.15	8.94	3.22	9.12	3.23	9.22	3.37
	48	6.34	2.95	7.09	3.07	7.75	3.18	8.08	3.24	8.24	3.27	8.56	3.34	8.72	3.36	8.79	2.75
50%	10	6.24	1.55	7.13	1.64	7.95	1.72	8.36	1.77	8.62	1.79	9.15	1.83	9.41	1.84	9.60	1.86
	12	6.24	1.55	7.13	1.64	7.95	1.73	8.36	1.78	8.62	1.79	9.15	1.83	9.41	1.84	9.60	1.86
	14	6.24	1.55	7.13	1.64	7.95	1.73	8.36	1.78	8.62	1.80	9.15	1.83	9.41	1.85	9.60	1.86
	16	6.24	2.07	7.13	1.66	7.95	1.37	8.36	1.04	8.62	1.44	9.15	1.84	9.41	1.85	9.60	2.05
	18	6.24	1.57	7.13	1.67	7.95	1.75	8.36	1.80	8.62	1.83	9.15	1.86	9.41	1.87	9.60	1.89
	20	6.24	1.60	7.13	1.68	7.95	1.77	8.36	1.82	8.62	1.84	9.15	1.87	9.41	1.89	9.60	1.90
	22	6.24	1.61	7.13	1.70	7.95	1.79	8.36	1.84	8.62	1.86	9.15	1.90	9.41	1.91	9.60	1.93
	24	6.24	1.63	7.13	1.73	7.95	1.81	8.36	1.86	8.62	1.89	9.15	1.92	9.41	1.93	9.60	1.95
	25	6.24	1.65	7.13	1.74	7.95	1.83	8.36	1.88	8.62	1.90	9.15	1.94	9.41	1.95	9.60	1.97
	26	6.24	1.66	7.13	1.75	7.94	1.84	8.35	1.89	8.61	1.91	9.14	1.95	9.40	1.96	9.59	1.98
	28	6.24	1.67	7.11	1.76	7.91	1.85	8.31	1.91	8.57	1.93	9.09	1.97	9.35	1.97	9.54	1.99
	30	6.22	1.69	7.07	1.78	7.85	1.87	8.25	1.92	8.50	1.94	9.01	1.98	9.27	1.99	9.45	2.01
	32	6.18	1.73	7.02	1.83	7.78	1.92	8.16	1.97	8.41	1.99	8.91	2.03	9.16	2.04	9.34	2.06
	34	6.13	1.78	6.94	1.88	7.69	1.97	8.06	2.02	8.30	2.04	8.78	2.08	9.03	2.09	9.20	2.11
	35	6.09	1.81	6.90	1.90	7.63	1.99	8.00	2.04	8.24	2.07	8.71	2.10	8.95	2.12	9.11	2.14
	36	6.06	1.86	6.85	1.96	7.57	2.04	7.93	2.10	8.17	2.12	8.63	2.16	8.86	2.17	9.02	2.19
	38	5.97	1.97	6.74	2.06	7.44	2.15	7.79	2.20	8.01	2.23	8.45	2.27	8.67	2.28	8.82	2.30
	40	5.87	2.07	6.61	2.17	7.28	2.26	7.62	2.31	7.83	2.33	8.24	2.38	8.44	2.39	8.58	2.42
	43	5.68	2.18	6.38	2.28	7.01	2.37	7.33	2.42	7.51	2.45	7.87	2.49	8.06	2.51	8.17	2.79
	46	5.46	2.34	6.11	2.43	6.70	2.52	6.99	2.57	7.14	2.60	7.45	2.65	7.60	2.67	7.68	2.78
	48	5.29	2.43	5.91	2.53	6.46	2.62	6.74	2.67	6.87	2.70	7.13	2.75	7.26	2.77	7.32	2.27

11.1.2 FSXNME

◆ RAS-8FSXNME

	To/ Ti	14		16		18		19		20		22		23		24	
		CAP	IPT	CAP	IPT	CAP	IPT	CAP	IPT	CAP	IPT	CAP	IPT	CAP	IPT	CAP	IPT
130%	10	21.11	4.56	22.36	4.65	24.04	4.93	24.83	4.98	25.55	5.09	27.30	5.16	28.13	5.22	28.95	5.25
	12	21.11	4.56	22.36	4.65	24.04	4.93	24.83	4.99	25.55	5.11	27.30	5.16	28.13	5.22	28.95	5.25
	14	21.11	4.59	22.36	4.66	24.04	4.94	24.83	5.00	25.55	5.12	27.30	5.17	28.13	5.23	28.95	5.26
	16	21.11	4.61	22.36	4.68	24.04	4.98	24.83	5.03	25.55	5.15	27.30	5.20	28.13	5.26	28.95	5.29
	18	21.11	4.63	22.36	4.72	24.04	5.01	24.83	5.07	25.55	5.18	27.30	5.25	28.13	5.31	28.95	5.33
	20	21.11	4.68	22.58	4.77	24.04	5.07	24.83	5.12	25.55	5.24	27.30	5.29	28.13	5.35	28.95	5.38
	22	21.03	4.74	22.49	4.83	23.95	5.12	24.74	5.17	25.45	5.29	27.20	5.36	28.02	5.42	28.84	5.45
	24	20.95	4.80	22.40	4.89	23.86	5.19	24.64	5.24	25.35	5.37	27.09	5.42	27.91	5.49	28.73	5.52
	25	20.91	4.84	22.36	4.92	23.81	5.22	24.59	5.28	25.30	5.41	27.04	5.47	27.85	5.53	28.67	5.56
	26	20.86	4.87	22.31	4.96	23.77	5.27	24.54	5.32	25.26	5.44	27.00	5.51	27.81	5.57	28.63	5.60
	28	20.76	4.95	22.21	5.03	23.69	5.34	24.42	5.40	25.18	5.52	26.91	5.58	27.73	5.64	28.54	5.67
	30	20.66	5.02	22.11	5.11	23.60	5.41	24.31	5.47	25.09	5.59	26.83	5.66	27.64	5.71	28.46	5.74
	32	20.39	5.25	21.84	5.34	23.33	5.65	24.08	5.71	24.86	5.83	26.59	5.90	27.40	5.95	28.22	5.98
	34	20.12	5.49	21.58	5.59	23.06	5.89	23.86	5.96	24.64	6.08	26.35	6.14	27.16	6.19	27.98	6.23
	35	19.72	5.61	21.31	5.71	22.90	6.02	23.74	6.08	24.59	6.20	26.39	6.26	26.82	6.32	27.24	6.35
	36	19.42	5.74	21.01	5.84	22.60	6.13	23.43	6.21	24.25	6.32	25.95	6.37	26.31	6.44	26.67	6.47
	38	18.83	6.00	20.42	6.11	22.01	6.38	22.79	6.48	23.57	6.56	25.06	6.64	25.29	6.68	25.52	6.72
	40	18.23	6.26	19.82	6.38	21.41	6.63	22.15	6.74	22.90	6.80	24.17	6.93	24.27	6.93	24.38	6.97
	43	16.01	6.66	17.60	6.77	19.19	6.99	19.77	7.14	20.35	7.17	20.83	7.32	20.46	7.29	20.09	7.34
	46	14.31	6.51	15.90	6.75	17.49	6.99	17.96	7.10	18.42	7.16	18.29	7.30	17.56	7.30	16.82	7.31
	48	13.19	5.38	14.78	5.54	16.37	5.71	16.75	5.82	17.13	5.86	16.60	5.97	15.62	5.97	14.65	5.97
120%	10	20.91	4.52	22.15	4.60	23.82	4.88	24.60	4.93	25.31	5.05	27.04	5.11	27.86	5.17	28.68	5.20
	12	20.91	4.52	22.15	4.60	23.82	4.88	24.60	4.94	25.31	5.06	27.04	5.11	27.86	5.17	28.68	5.20
	14	20.91	4.54	22.15	4.61	23.82	4.90	24.60	4.96	25.31	5.07	27.04	5.12	27.86	5.18	28.68	5.22
	16	20.91	4.57	22.15	4.64	23.82	4.93	24.60	4.98	25.31	5.10	27.04	5.15	27.86	5.21	28.68	5.24
	18	20.91	4.59	22.15	4.67	23.82	4.96	24.60	5.02	25.31	5.14	27.04	5.20	27.86	5.26	28.68	5.28
	20	20.91	4.64	22.36	4.72	23.82	5.02	24.60	5.07	25.31	5.19	27.04	5.24	27.86	5.30	28.68	5.33
	22	20.83	4.70	22.28	4.78	23.73	5.07	24.50	5.12	25.21	5.24	26.94	5.31	27.75	5.37	28.57	5.39
	24	20.75	4.76	22.19	4.84	23.64	5.14	24.41	5.19	25.11	5.32	26.84	5.37	27.65	5.44	28.45	5.46
	25	20.71	4.79	22.15	4.87	23.59	5.18	24.36	5.23	25.06	5.36	26.78	5.42	27.59	5.48	28.40	5.51
	26	20.66	4.82	22.10	4.92	23.55	5.22	24.31	5.27	25.02	5.39	26.74	5.46	27.55	5.52	28.36	5.55
	28	20.56	4.90	22.00	4.98	23.46	5.29	24.19	5.35	24.94	5.46	26.66	5.53	27.47	5.59	28.27	5.62
	30	20.47	4.97	21.91	5.06	23.38	5.36	24.08	5.42	24.85	5.54	26.57	5.60	27.38	5.66	28.19	5.68
	32	20.20	5.20	21.64	5.29	23.11	5.60	23.86	5.66	24.63	5.78	26.34	5.84	27.14	5.90	27.95	5.93
	34	19.93	5.44	21.37	5.53	22.85	5.84	23.63	5.90	24.40	6.02	26.10	6.08	26.90	6.14	27.71	6.17
	35	19.53	5.56	21.11	5.66	22.68	5.96	23.52	6.02	24.36	6.14	26.15	6.21	26.57	6.26	26.99	6.29
	36	19.24	5.69	20.81	5.79	22.39	6.08	23.21	6.15	24.02	6.26	25.70	6.31	26.06	6.38	26.42	6.41
	38	18.65	5.94	20.22	6.06	21.80	6.32	22.58	6.42	23.35	6.50	24.82	6.58	25.05	6.62	25.28	6.66
	40	18.06	6.20	19.64	6.32	21.21	6.56	21.95	6.68	22.68	6.74	23.94	6.87	24.05	6.87	24.15	6.91
	43	15.86	6.60	17.43	6.71	19.01	6.93	19.58	7.07	20.16	7.10	20.63	7.25	20.27	7.23	19.90	7.28
	46	14.18	6.45	15.75	6.69	17.33	6.92	17.79	7.04	18.24	7.10	18.12	7.23	17.39	7.23	16.67	7.24
	48	13.06	5.33	14.64	5.49	16.21	5.66	16.59	5.76	16.97	5.81	16.44	5.91	15.48	5.91	14.51	5.92

RAS-8FSXNME

	To/ Ti	14		16		18		19		20		22		23		24	
		CAP	IPT	CAP	IPT	CAP	IPT	CAP	IPT	CAP	IPT	CAP	IPT	CAP	IPT	CAP	IPT
110%	10	20.71	4.48	21.94	4.56	23.59	4.84	24.36	4.89	25.07	5.00	26.79	5.06	27.59	5.12	28.40	5.15
	12	20.71	4.48	21.94	4.56	23.59	4.84	24.36	4.90	25.07	5.01	26.79	5.06	27.59	5.12	28.40	5.15
	14	20.71	4.50	21.94	4.57	23.59	4.85	24.36	4.91	25.07	5.02	26.79	5.07	27.59	5.14	28.40	5.17
	16	20.71	4.52	21.94	4.59	23.59	4.89	24.36	4.93	25.07	5.05	26.79	5.10	27.59	5.16	28.40	5.19
	18	20.71	4.55	21.94	4.63	23.59	4.91	24.36	4.97	25.07	5.09	26.79	5.15	27.59	5.21	28.40	5.23
	20	20.71	4.59	22.15	4.68	23.59	4.97	24.36	5.02	25.07	5.14	26.79	5.19	27.59	5.25	28.40	5.28
	22	20.63	4.65	22.07	4.73	23.50	5.02	24.27	5.07	24.97	5.19	26.68	5.26	27.49	5.32	28.29	5.34
	24	20.55	4.71	21.98	4.79	23.41	5.10	24.18	5.14	24.87	5.27	26.58	5.32	27.38	5.38	28.18	5.41
	25	20.51	4.75	21.94	4.83	23.37	5.13	24.13	5.18	24.83	5.31	26.53	5.37	27.33	5.43	28.13	5.46
	26	20.47	4.78	21.89	4.87	23.32	5.17	24.07	5.22	24.78	5.34	26.49	5.40	27.29	5.47	28.09	5.49
	28	20.37	4.86	21.79	4.94	23.24	5.24	23.96	5.30	24.70	5.41	26.40	5.48	27.20	5.53	28.00	5.56
	30	20.27	4.92	21.70	5.01	23.16	5.31	23.85	5.37	24.62	5.48	26.32	5.55	27.12	5.61	27.92	5.63
	32	20.01	5.15	21.43	5.24	22.89	5.54	23.63	5.61	24.39	5.72	26.08	5.79	26.88	5.84	27.68	5.87
	34	19.74	5.38	21.17	5.48	22.63	5.78	23.41	5.84	24.17	5.96	25.85	6.03	26.65	6.08	27.45	6.11
	35	19.34	5.50	20.90	5.61	22.46	5.91	23.30	5.96	24.13	6.08	25.90	6.15	26.31	6.20	26.73	6.23
	36	19.05	5.63	20.61	5.73	22.17	6.02	22.98	6.10	23.80	6.20	25.46	6.25	25.81	6.32	26.17	6.35
	38	18.47	5.88	20.03	6.00	21.59	6.26	22.36	6.36	23.13	6.44	24.59	6.52	24.81	6.56	25.04	6.60
	40	17.89	6.15	19.45	6.26	21.01	6.50	21.74	6.62	22.46	6.68	23.71	6.80	23.82	6.80	23.92	6.84
	43	15.70	6.54	17.26	6.65	18.82	6.86	19.40	7.00	19.97	7.03	20.44	7.18	20.07	7.16	19.71	7.21
	46	14.04	6.39	15.60	6.62	17.16	6.85	17.62	6.97	18.07	7.03	17.95	7.16	17.23	7.16	16.51	7.17
	48	12.94	5.28	14.50	5.44	16.06	5.61	16.43	5.71	16.81	5.76	16.29	5.85	15.33	5.85	14.37	5.86
100%	10	19.91	4.26	21.10	4.34	22.68	4.61	23.43	4.65	24.10	4.76	25.76	4.82	26.53	4.88	27.31	4.91
	12	19.91	4.26	21.10	4.34	22.68	4.61	23.43	4.66	24.10	4.77	25.76	4.82	26.53	4.88	27.31	4.91
	14	19.91	4.29	21.10	4.35	22.68	4.62	23.43	4.68	24.10	4.78	25.76	4.83	26.53	4.89	27.31	4.92
	16	19.91	4.31	21.10	4.37	22.68	4.65	23.43	4.70	24.10	4.81	25.76	4.86	26.53	4.92	27.31	4.95
	18	19.91	4.33	21.10	4.41	22.68	4.68	23.43	4.73	24.10	4.85	25.76	4.91	26.53	4.96	27.31	4.99
	20	19.91	4.37	21.30	4.45	22.68	4.74	23.43	4.78	24.10	4.89	25.76	4.94	26.53	5.00	27.31	5.02
	22	19.84	4.43	21.22	4.51	22.60	4.78	23.34	4.83	24.01	4.94	25.66	5.01	26.43	5.06	27.20	5.09
	24	19.76	4.49	21.14	4.57	22.51	4.85	23.25	4.90	23.92	5.01	25.56	5.07	26.33	5.13	27.10	5.15
	25	19.73	4.52	21.10	4.60	22.47	4.88	23.20	4.94	23.87	5.06	25.51	5.11	26.28	5.17	27.05	5.20
	26	19.68	4.55	21.05	4.64	22.43	4.92	23.15	4.97	23.83	5.09	25.47	5.15	26.24	5.21	27.01	5.23
	28	19.58	4.62	20.96	4.70	22.35	4.99	23.04	5.04	23.75	5.15	25.39	5.22	26.16	5.27	26.93	5.30
	30	19.49	4.69	20.86	4.77	22.27	5.06	22.93	5.11	23.67	5.22	25.31	5.29	26.08	5.34	26.85	5.36
	32	19.24	4.90	20.61	4.99	22.01	5.28	22.72	5.34	23.46	5.45	25.08	5.51	25.85	5.56	26.62	5.59
	34	18.98	5.13	20.35	5.22	21.76	5.51	22.51	5.57	23.24	5.68	24.85	5.74	25.62	5.79	26.39	5.82
	35	18.60	5.24	20.10	5.34	21.60	5.63	22.40	5.68	23.20	5.79	24.90	5.85	25.30	5.91	25.70	5.93
	36	18.32	5.37	19.82	5.46	21.32	5.73	22.10	5.81	22.88	5.91	24.48	5.95	24.82	6.02	25.16	6.05
	38	17.76	5.60	19.26	5.71	20.76	5.96	21.50	6.06	22.24	6.13	23.64	6.21	23.86	6.24	24.08	6.28
	40	17.20	5.85	18.70	5.96	20.20	6.19	20.90	6.30	21.60	6.36	22.80	6.48	22.90	6.48	23.00	6.52
	43	15.10	6.23	16.60	6.33	18.10	6.53	18.65	6.67	19.20	6.70	19.65	6.84	19.30	6.82	18.95	6.86
	46	13.50	6.09	15.00	6.31	16.50	6.53	16.94	6.64	17.38	6.69	17.26	6.82	16.56	6.82	15.87	6.83
	48	12.44	5.02	13.94	5.18	15.44	5.34	15.80	5.44	16.16	5.48	15.66	5.58	14.74	5.58	13.82	5.58
90%	10	17.92	3.69	18.99	3.76	20.41	3.99	21.08	4.03	21.69	4.13	23.18	4.18	23.88	4.23	24.58	4.25
	12	17.92	3.69	18.99	3.76	20.41	3.99	21.08	4.04	21.69	4.14	23.18	4.18	23.88	4.23	24.58	4.25
	14	17.92	3.71	18.99	3.77	20.41	4.00	21.08	4.05	21.69	4.15	23.18	4.19	23.88	4.24	24.58	4.26
	16	17.92	3.73	18.99	3.79	20.41	4.03	21.08	4.07	21.69	4.17	23.18	4.21	23.88	4.26	24.58	4.29
	18	17.92	3.75	18.99	3.82	20.41	4.05	21.08	4.10	21.69	4.20	23.18	4.25	23.88	4.30	24.58	4.32
	20	17.92	3.79	19.17	3.86	20.41	4.11	21.08	4.14	21.69	4.24	23.18	4.28	23.88	4.33	24.58	4.35
	22	17.85	3.84	19.10	3.91	20.34	4.15	21.00	4.18	21.61	4.28	23.09	4.34	23.79	4.39	24.48	4.41
	24	17.79	3.89	19.02	3.96	20.26	4.21	20.92	4.25	21.53	4.35	23.00	4.39	23.70	4.44	24.39	4.47
	25	17.75	3.92	18.99	3.99	20.22	4.23	20.88	4.28	21.48	4.38	22.96	4.43	23.65	4.48	24.34	4.51
	26	17.71	3.94	18.94	4.02	20.18	4.27	20.83	4.31	21.45	4.41	22.92	4.46	23.61	4.51	24.31	4.53
	28	17.63	4.01	18.86	4.08	20.11	4.32	20.74	4.37	21.38	4.47	22.85	4.52	23.54	4.57	24.23	4.59
	30	17.54	4.06	18.78	4.14	20.04	4.38	20.64	4.43	21.30	4.53	22.78	4.58	23.47	4.63	24.16	4.65
	32	17.31	4.25	18.55	4.33	19.81	4.57	20.45	4.63	21.11	4.72	22.57	4.78	23.27	4.82	23.96	4.84
	34	17.08	4.44	18.32	4.53	19.58	4.77	20.26	4.82	20.92	4.92	22.37	4.97	23.06	5.02	23.75	5.04
	35	16.74	4.54	18.09	4.63	19.44	4.88	20.16	4.92	20.88	5.02	22.41	5.07	22.77	5.12	23.13	5.14
	36	16.49	4.65	17.84	4.73	19.19	4.97	19.89	5.03	20.59	5.12	22.03	5.16	22.34	5.21	22.64	5.24
	38	15.98	4.86	17.33	4.95	18.68	5.17	19.35	5.25	20.02	5.31	21.28	5.38	21.48	5.41	21.67	5.45
	40	15.48	5.07	16.83	5.17	18.18	5.37	18.81	5.46	19.44	5.51	20.52	5.61	20.61	5.61	20.70	5.65
	43	13.61	5.40	14.96	5.49	16.31	5.66	16.79	5.78	17.27	5.81	17.67	5.93	17.37	5.91	17.06	5.95
	46	12.18	5.27	13.53	5.47	14.88	5.66	15.25	5.75	15.61	5.80	15.50	5.91	14.90	5.91	14.30	5.92
	48	11.23	4.35	12.58	4.49	13.93	4.63	14.22	4.71	14.51	4.75	14.06	4.83	13.26	4.83	12.46	4.84

RAS-8FSXNME

	To/ Ti	14		16		18		19		20		22		23		24	
		CAP	IPT	CAP	IPT	CAP	IPT	CAP	IPT	CAP	IPT	CAP	IPT	CAP	IPT	CAP	IPT
80%	10	15.93	3.16	16.88	3.21	18.15	3.41	18.74	3.45	19.28	3.53	20.61	3.57	21.23	3.61	21.85	3.63
	12	15.93	3.16	16.88	3.21	18.15	3.41	18.74	3.45	19.28	3.53	20.61	3.57	21.23	3.61	21.85	3.63
	14	15.93	3.17	16.88	3.22	18.15	3.42	18.74	3.46	19.28	3.54	20.61	3.58	21.23	3.62	21.85	3.64
	16	15.93	3.19	16.88	3.24	18.15	3.45	18.74	3.48	19.28	3.56	20.61	3.60	21.23	3.64	21.85	3.66
	18	15.93	3.21	16.88	3.26	18.15	3.46	18.74	3.51	19.28	3.59	20.61	3.63	21.23	3.67	21.85	3.69
	20	15.93	3.24	17.04	3.30	18.15	3.51	18.74	3.54	19.28	3.62	20.61	3.66	21.23	3.70	21.85	3.72
	22	15.87	3.28	16.97	3.34	18.08	3.54	18.67	3.58	19.21	3.66	20.53	3.71	21.15	3.75	21.76	3.77
	24	15.81	3.32	16.91	3.38	18.01	3.59	18.60	3.63	19.13	3.71	20.45	3.75	21.06	3.80	21.68	3.82
	25	15.78	3.35	16.88	3.41	17.97	3.62	18.56	3.66	19.10	3.74	20.41	3.79	21.02	3.83	21.64	3.85
	26	15.74	3.37	16.84	3.43	17.94	3.64	18.52	3.68	19.06	3.77	20.38	3.81	20.99	3.85	21.61	3.87
	28	15.67	3.42	16.76	3.48	17.88	3.69	18.43	3.73	19.00	3.82	20.31	3.86	20.93	3.90	21.54	3.92
	30	15.59	3.47	16.69	3.53	17.81	3.74	18.35	3.79	18.94	3.87	20.25	3.91	20.86	3.96	21.48	3.97
	32	15.39	3.63	16.49	3.70	17.61	3.91	18.18	3.95	18.77	4.04	20.07	4.08	20.68	4.12	21.30	4.14
	34	15.19	3.80	16.28	3.87	17.41	4.08	18.01	4.12	18.59	4.20	19.88	4.25	20.50	4.29	21.11	4.31
	35	14.88	3.88	16.08	3.96	17.28	4.17	17.92	4.21	18.56	4.29	19.92	4.34	20.24	4.38	20.56	4.39
	36	14.66	3.97	15.86	4.04	17.06	4.25	17.68	4.30	18.30	4.37	19.58	4.41	19.86	4.46	20.13	4.48
	38	14.21	4.15	15.41	4.23	16.61	4.41	17.20	4.49	17.79	4.54	18.91	4.60	19.09	4.62	19.26	4.65
	40	13.76	4.33	14.96	4.42	16.16	4.59	16.72	4.67	17.28	4.71	18.24	4.80	18.32	4.80	18.40	4.83
	43	12.07	4.61	13.27	4.69	14.47	4.84	14.92	4.94	15.37	4.96	15.73	5.07	15.45	5.05	15.18	5.08
	46	10.79	4.51	11.99	4.67	13.19	4.83	13.55	4.92	13.91	4.96	13.82	5.05	13.27	5.05	12.72	5.06
	48	9.93	3.72	11.14	3.84	12.34	3.95	12.64	4.03	12.95	4.06	12.55	4.13	11.82	4.13	11.09	4.13
70%	10	13.94	2.65	14.77	2.70	15.88	2.86	16.40	2.89	16.87	2.96	18.03	2.99	18.57	3.03	19.12	3.05
	12	13.94	2.65	14.77	2.70	15.88	2.86	16.40	2.90	16.87	2.96	18.03	2.99	18.57	3.03	19.12	3.05
	14	13.94	2.66	14.77	2.70	15.88	2.87	16.40	2.90	16.87	2.97	18.03	3.00	18.57	3.04	19.12	3.06
	16	13.94	2.68	14.77	2.72	15.88	2.89	16.40	2.92	16.87	2.99	18.03	3.02	18.57	3.05	19.12	3.07
	18	13.94	2.69	14.77	2.74	15.88	2.91	16.40	2.94	16.87	3.01	18.03	3.05	18.57	3.08	19.12	3.10
	20	13.94	2.72	14.91	2.77	15.88	2.94	16.40	2.97	16.87	3.04	18.03	3.07	18.57	3.11	19.12	3.12
	22	13.89	2.75	14.85	2.80	15.82	2.97	16.34	3.00	16.81	3.07	17.96	3.11	18.50	3.15	19.04	3.16
	24	13.83	2.79	14.80	2.84	15.76	3.01	16.27	3.04	16.74	3.11	17.89	3.15	18.43	3.18	18.97	3.20
	25	13.81	2.81	14.77	2.86	15.73	3.03	16.24	3.07	16.71	3.14	17.86	3.17	18.39	3.21	18.93	3.23
	26	13.77	2.82	14.73	2.88	15.70	3.06	16.20	3.09	16.68	3.16	17.83	3.20	18.37	3.23	18.90	3.25
	28	13.71	2.87	14.67	2.92	15.64	3.10	16.13	3.13	16.63	3.20	17.77	3.24	18.31	3.27	18.85	3.29
	30	13.64	2.91	14.60	2.96	15.59	3.14	16.05	3.17	16.57	3.24	17.72	3.28	18.25	3.32	18.79	3.33
	32	13.47	3.05	14.43	3.10	15.41	3.28	15.90	3.32	16.42	3.39	17.56	3.42	18.10	3.45	18.63	3.47
	34	13.29	3.18	14.25	3.24	15.23	3.42	15.75	3.46	16.27	3.53	17.40	3.56	17.94	3.60	18.47	3.61
	35	13.02	3.25	14.07	3.32	15.12	3.49	15.68	3.53	16.24	3.60	17.43	3.64	17.71	3.67	17.99	3.68
	36	12.82	3.33	13.87	3.39	14.92	3.56	15.47	3.61	16.02	3.67	17.14	3.70	17.38	3.74	17.61	3.76
	38	12.43	3.48	13.48	3.55	14.53	3.70	15.05	3.76	15.57	3.81	16.55	3.86	16.71	3.88	16.86	3.90
	40	12.04	3.63	13.09	3.70	14.14	3.85	14.63	3.91	15.12	3.95	15.96	4.02	16.03	4.02	16.10	4.05
	43	10.58	3.87	11.63	3.93	12.68	4.06	13.06	4.14	13.43	4.16	13.75	4.25	13.50	4.23	13.25	4.26
	46	9.47	3.78	10.52	3.92	11.57	4.05	11.86	4.12	12.15	4.16	12.07	4.24	11.58	4.24	11.08	4.24
	48	8.72	3.12	9.78	3.22	10.83	3.32	11.06	3.38	11.30	3.40	10.95	3.46	10.29	3.46	9.64	3.47
60%	10	11.95	2.16	12.66	2.20	13.61	2.34	14.06	2.36	14.46	2.42	15.45	2.45	15.92	2.48	16.39	2.49
	12	11.95	2.16	12.66	2.20	13.61	2.34	14.06	2.37	14.46	2.42	15.45	2.45	15.92	2.48	16.39	2.49
	14	11.95	2.18	12.66	2.21	13.61	2.35	14.06	2.37	14.46	2.43	15.45	2.45	15.92	2.48	16.39	2.50
	16	11.95	2.19	12.66	2.22	13.61	2.36	14.06	2.39	14.46	2.44	15.45	2.47	15.92	2.50	16.39	2.51
	18	11.95	2.20	12.66	2.24	13.61	2.38	14.06	2.40	14.46	2.46	15.45	2.49	15.92	2.52	16.39	2.53
	20	11.95	2.22	12.78	2.26	13.61	2.40	14.06	2.43	14.46	2.48	15.45	2.51	15.92	2.54	16.39	2.55
	22	11.90	2.25	12.73	2.29	13.56	2.43	14.00	2.45	14.41	2.51	15.39	2.54	15.86	2.57	16.32	2.58
	24	11.86	2.28	12.68	2.32	13.51	2.46	13.95	2.49	14.35	2.55	15.34	2.57	15.80	2.60	16.26	2.62
	25	11.84	2.30	12.66	2.33	13.48	2.48	13.92	2.51	14.32	2.57	15.31	2.60	15.77	2.62	16.23	2.64
	26	11.81	2.31	12.63	2.35	13.46	2.50	13.89	2.53	14.30	2.58	15.28	2.61	15.74	2.64	16.20	2.66
	28	11.75	2.35	12.57	2.39	13.41	2.53	13.83	2.56	14.25	2.62	15.23	2.65	15.69	2.68	16.16	2.69
	30	11.69	2.38	12.52	2.42	13.36	2.57	13.76	2.60	14.20	2.65	15.19	2.68	15.65	2.71	16.11	2.72
	32	11.54	2.49	12.36	2.54	13.21	2.68	13.63	2.71	14.07	2.77	15.05	2.80	15.51	2.82	15.97	2.84
	34	11.39	2.60	12.21	2.65	13.05	2.80	13.50	2.83	13.95	2.88	14.91	2.91	15.37	2.94	15.84	2.95
	35	11.16	2.66	12.06	2.71	12.96	2.86	13.44	2.88	13.92	2.94	14.94	2.97	15.18	3.00	15.42	3.01
	36	10.99	2.72	11.89	2.77	12.79	2.91	13.26	2.95	13.73	3.00	14.69	3.02	14.90	3.05	15.10	3.07
	38	10.66	2.84	11.56	2.90	12.46	3.03	12.90	3.08	13.34	3.11	14.18	3.15	14.32	3.17	14.45	3.19
	40	10.32	2.97	11.22	3.03	12.12	3.14	12.54	3.20	12.96	3.23	13.68	3.29	13.74	3.29	13.80	3.31
	43	9.05	3.16	9.95	3.21	10.85	3.32	11.19	3.39	11.54	3.40	11.81	3.47	11.58	3.46	11.36	3.49
	46	8.08	3.09	8.98	3.20	9.88	3.31	10.16	3.37	10.45	3.40	10.38	3.46	9.95	3.46	9.51	3.47
	48	7.43	2.55	8.33	2.63	9.23	2.71	9.48	2.76	9.73	2.78	9.43	2.83	8.85	2.83	8.28	2.83

RAS-8FSXNME

	To/ Ti	14		16		18		19		20		22		23		24	
		CAP	IPT	CAP	IPT	CAP	IPT	CAP	IPT	CAP	IPT	CAP	IPT	CAP	IPT	CAP	IPT
50%	10	9.96	1.71	10.55	1.74	11.34	1.84	11.71	1.86	12.05	1.90	12.88	1.93	13.27	1.95	13.65	1.96
	12	9.96	1.71	10.55	1.74	11.34	1.84	11.71	1.87	12.05	1.91	12.88	1.93	13.27	1.95	13.65	1.96
	14	9.96	1.71	10.55	1.74	11.34	1.85	11.71	1.87	12.05	1.91	12.88	1.93	13.27	1.96	13.65	1.97
	16	9.96	1.72	10.55	1.75	11.34	1.86	11.71	1.88	12.05	1.92	12.88	1.94	13.27	1.97	13.65	1.98
	18	9.96	1.73	10.55	1.76	11.34	1.87	11.71	1.89	12.05	1.94	12.88	1.96	13.27	1.98	13.65	1.99
	20	9.96	1.75	10.65	1.78	11.34	1.89	11.71	1.91	12.05	1.96	12.88	1.98	13.27	2.00	13.65	2.01
	22	9.92	1.77	10.61	1.80	11.30	1.91	11.67	1.93	12.00	1.98	12.83	2.00	13.22	2.03	13.60	2.04
	24	9.88	1.79	10.57	1.83	11.26	1.94	11.62	1.96	11.96	2.01	12.78	2.03	13.16	2.05	13.55	2.06
	25	9.86	1.81	10.55	1.84	11.23	1.95	11.60	1.98	11.94	2.02	12.75	2.04	13.14	2.07	13.52	2.08
	26	9.84	1.82	10.52	1.85	11.21	1.97	11.57	1.99	11.92	2.03	12.73	2.06	13.12	2.08	13.50	2.09
	28	9.79	1.85	10.48	1.88	11.17	1.99	11.52	2.02	11.88	2.06	12.69	2.09	13.08	2.11	13.46	2.12
	30	9.75	1.88	10.43	1.91	11.13	2.02	11.47	2.04	11.84	2.09	12.65	2.11	13.04	2.14	13.42	2.15
	32	9.62	1.96	10.30	2.00	11.01	2.11	11.36	2.14	11.73	2.18	12.54	2.20	12.93	2.22	13.31	2.24
	34	9.49	2.05	10.18	2.09	10.88	2.20	11.25	2.23	11.62	2.27	12.43	2.30	12.81	2.32	13.20	2.33
	35	9.30	2.10	10.05	2.14	10.80	2.25	11.20	2.27	11.60	2.32	12.45	2.34	12.65	2.36	12.85	2.37
	36	9.16	2.15	9.91	2.18	10.66	2.29	11.05	2.32	11.44	2.36	12.24	2.38	12.41	2.41	12.58	2.42
	38	8.88	2.24	9.63	2.28	10.38	2.38	10.75	2.42	11.12	2.45	11.82	2.48	11.93	2.50	12.04	2.51
	40	8.60	2.34	9.35	2.39	10.10	2.48	10.45	2.52	10.80	2.54	11.40	2.59	11.45	2.59	11.50	2.61
	43	7.55	2.49	8.30	2.53	9.05	2.61	9.33	2.67	9.60	2.68	9.83	2.74	9.65	2.73	9.48	2.75
	46	6.75	2.43	7.50	2.52	8.25	2.61	8.47	2.66	8.69	2.68	8.63	2.73	8.28	2.73	7.94	2.73
	48	6.22	2.01	6.97	2.07	7.72	2.14	7.90	2.18	8.08	2.19	7.83	2.23	7.37	2.23	6.91	2.23

◆ RAS-10FSXNME

	To/ Ti	14		16		18		19		20		22		23		24	
		CAP	IPT	CAP	IPT	CAP	IPT	CAP	IPT	CAP	IPT	CAP	IPT	CAP	IPT	CAP	IPT
130%	10	26.39	5.84	27.95	5.95	30.06	6.31	31.04	6.38	31.94	6.53	34.13	6.60	35.16	6.68	36.19	6.72
	12	26.39	5.84	27.95	5.95	30.06	6.31	31.04	6.40	31.94	6.55	34.13	6.60	35.16	6.68	36.19	6.72
	14	26.39	5.87	27.95	5.96	30.06	6.33	31.04	6.41	31.94	6.56	34.13	6.62	35.16	6.70	36.19	6.74
	16	26.39	5.90	27.95	5.99	30.06	6.37	31.04	6.44	31.94	6.60	34.13	6.65	35.16	6.73	36.19	6.77
	18	26.39	5.93	27.95	6.04	30.06	6.41	31.04	6.49	31.94	6.65	34.13	6.72	35.16	6.79	36.19	6.83
	20	26.39	5.99	28.22	6.10	30.06	6.49	31.04	6.56	31.94	6.71	34.13	6.77	35.16	6.85	36.19	6.88
	22	26.29	6.07	28.11	6.18	29.94	6.55	30.92	6.62	31.81	6.78	34.00	6.86	35.02	6.93	36.05	6.97
	24	26.19	6.15	28.01	6.25	29.83	6.65	30.80	6.72	31.69	6.88	33.87	6.95	34.89	7.02	35.91	7.06
	25	26.14	6.19	27.95	6.30	29.77	6.70	30.74	6.77	31.63	6.93	33.80	7.01	34.82	7.08	35.84	7.12
	26	26.07	6.23	27.89	6.35	29.72	6.74	30.67	6.82	31.58	6.97	33.75	7.05	34.77	7.13	35.78	7.17
	28	25.95	6.34	27.77	6.45	29.61	6.83	30.53	6.91	31.47	7.07	33.64	7.15	34.66	7.22	35.68	7.27
	30	25.83	6.43	27.64	6.54	29.50	6.93	30.39	7.01	31.36	7.16	33.53	7.24	34.55	7.32	35.57	7.37
	32	25.49	6.73	27.31	6.85	29.17	7.24	30.11	7.32	31.08	7.47	33.23	7.55	34.25	7.63	35.27	7.67
	34	25.15	7.03	26.97	7.16	28.83	7.55	29.82	7.63	30.80	7.78	32.93	7.86	33.95	7.94	34.97	7.98
	35	24.98	7.19	26.80	7.32	28.66	7.70	29.68	7.78	30.65	7.93	32.78	7.99	33.80	8.07	34.82	8.13
	36	24.77	7.36	26.58	7.49	28.44	7.86	29.43	7.95	30.32	8.09	32.28	8.19	33.22	8.25	34.15	8.29
	38	24.35	7.68	26.14	7.83	28.00	8.17	28.94	8.29	29.64	8.40	31.27	8.53	32.05	8.56	32.83	8.62
	40	23.92	8.02	25.69	8.15	27.55	8.47	28.44	8.63	28.97	8.71	30.26	8.87	30.88	8.87	31.50	8.94
	43	23.28	8.53	24.03	8.67	25.89	8.95	26.58	9.14	26.45	9.18	26.47	9.37	26.49	9.34	26.51	9.40
	46	22.65	8.34	22.77	8.64	24.63	8.94	25.17	9.11	24.53	9.18	23.59	9.33	23.16	9.33	22.73	9.36
	48	22.22	6.88	21.93	7.10	23.79	7.32	24.22	7.45	23.25	7.51	21.67	7.64	20.94	7.64	20.20	7.65
120%	10	26.14	5.78	27.69	5.89	29.77	6.25	30.75	6.32	31.63	6.47	33.81	6.54	34.82	6.62	35.84	6.66
	12	26.14	5.78	27.69	5.89	29.77	6.25	30.75	6.34	31.63	6.48	33.81	6.54	34.82	6.62	35.84	6.66
	14	26.14	5.81	27.69	5.91	29.77	6.27	30.75	6.35	31.63	6.50	33.81	6.56	34.82	6.63	35.84	6.67
	16	26.14	5.84	27.69	5.94	29.77	6.32	30.75	6.38	31.63	6.53	33.81	6.59	34.82	6.67	35.84	6.71
	18	26.14	5.88	27.69	5.98	29.77	6.35	30.75	6.43	31.63	6.58	33.81	6.66	34.82	6.73	35.84	6.76
	20	26.14	5.94	27.95	6.04	29.77	6.43	30.75	6.49	31.63	6.65	33.81	6.71	34.82	6.78	35.84	6.81
	22	26.04	6.01	27.85	6.12	29.66	6.49	30.63	6.56	31.51	6.72	33.68	6.80	34.69	6.87	35.71	6.90
	24	25.94	6.09	27.74	6.19	29.54	6.58	30.51	6.65	31.39	6.81	33.55	6.88	34.56	6.96	35.57	6.99
	25	25.89	6.13	27.69	6.24	29.49	6.63	30.45	6.70	31.33	6.86	33.48	6.94	34.49	7.01	35.50	7.05
	26	25.83	6.17	27.63	6.29	29.44	6.68	30.38	6.76	31.28	6.91	33.43	6.99	34.44	7.06	35.45	7.10
	28	25.71	6.28	27.50	6.39	29.33	6.77	30.24	6.85	31.17	7.00	33.32	7.08	34.33	7.16	35.34	7.20
	30	25.58	6.37	27.38	6.47	29.22	6.86	30.10	6.94	31.07	7.09	33.22	7.17	34.23	7.25	35.24	7.30
	32	25.25	6.66	27.05	6.79	28.89	7.17	29.82	7.25	30.79	7.40	32.92	7.48	33.93	7.56	34.94	7.60
	34	24.92	6.97	26.71	7.09	28.56	7.48	29.54	7.56	30.51	7.71	32.62	7.79	33.63	7.86	34.64	7.90
	35	24.75	7.12	26.55	7.25	28.39	7.63	29.40	7.71	30.37	7.86	32.47	7.91	33.48	7.99	34.49	8.05
	36	24.54	7.29	26.33	7.42	28.17	7.79	29.15	7.88	30.03	8.02	31.97	8.11	32.90	8.17	33.83	8.21
	38	24.12	7.61	25.89	7.76	27.73	8.09	28.66	8.22	29.36	8.32	30.97	8.45	31.74	8.48	32.52	8.54
	40	23.70	7.94	25.45	8.07	27.29	8.39	28.17	8.55	28.70	8.63	29.97	8.79	30.58	8.79	31.20	8.86
	43	23.06	8.45	23.81	8.59	25.65	8.87	26.33	9.05	26.20	9.09	26.22	9.29	26.24	9.25	26.26	9.32
	46	22.43	8.26	22.55	8.56	24.40	8.86	24.93	9.03	24.30	9.09	23.37	9.24	22.94	9.24	22.51	9.27
	48	22.01	6.82	21.72	7.03	23.56	7.25	23.99	7.38	23.03	7.44	21.47	7.57	20.74	7.57	20.01	7.58
110%	10	25.89	5.73	27.42	5.83	29.49	6.19	30.45	6.26	31.33	6.41	33.48	6.48	34.49	6.56	35.50	6.59
	12	25.89	5.73	27.42	5.83	29.49	6.19	30.45	6.28	31.33	6.42	33.48	6.48	34.49	6.56	35.50	6.59
	14	25.89	5.76	27.42	5.85	29.49	6.21	30.45	6.29	31.33	6.44	33.48	6.50	34.49	6.57	35.50	6.61
	16	25.89	5.79	27.42	5.88	29.49	6.26	30.45	6.32	31.33	6.47	33.48	6.53	34.49	6.61	35.50	6.65
	18	25.89	5.82	27.42	5.93	29.49	6.29	30.45	6.37	31.33	6.52	33.48	6.60	34.49	6.67	35.50	6.70
	20	25.89	5.88	27.69	5.99	29.49	6.37	30.45	6.43	31.33	6.59	33.48	6.65	34.49	6.72	35.50	6.75
	22	25.79	5.96	27.58	6.06	29.38	6.43	30.34	6.50	31.21	6.65	33.36	6.73	34.36	6.80	35.37	6.84
	24	25.69	6.03	27.48	6.14	29.26	6.52	30.22	6.59	31.09	6.75	33.23	6.82	34.23	6.89	35.23	6.93
	25	25.64	6.08	27.42	6.19	29.21	6.57	30.16	6.64	31.03	6.80	33.16	6.88	34.16	6.95	35.16	6.99
	26	25.58	6.11	27.36	6.23	29.15	6.62	30.09	6.69	30.98	6.84	33.11	6.92	34.11	7.00	35.11	7.04
	28	25.46	6.22	27.24	6.33	29.05	6.71	29.95	6.78	30.88	6.94	33.01	7.01	34.01	7.09	35.00	7.13
	30	25.34	6.31	27.12	6.41	28.95	6.80	29.82	6.88	30.77	7.02	32.90	7.10	33.90	7.18	34.90	7.23
	32	25.01	6.60	26.79	6.72	28.62	7.10	29.54	7.18	30.49	7.33	32.61	7.41	33.61	7.48	34.60	7.53
	34	24.68	6.90	26.46	7.03	28.29	7.41	29.26	7.48	30.22	7.64	32.31	7.71	33.31	7.79	34.31	7.83
	35	24.51	7.05	26.29	7.18	28.12	7.56	29.12	7.64	30.08	7.79	32.16	7.84	33.16	7.92	34.16	7.98
	36	24.30	7.22	26.08	7.35	27.90	7.71	28.88	7.80	29.75	7.94	31.67	8.03	32.59	8.09	33.51	8.14
	38	23.89	7.53	25.64	7.68	27.47	8.02	28.39	8.14	29.09	8.25	30.68	8.37	31.44	8.40	32.21	8.45
	40	23.47	7.87	25.21	8.00	27.03	8.31	27.90	8.47	28.42	8.55	29.69	8.70	30.29	8.70	30.90	8.77
	43	22.84	8.37	23.58	8.51	25.40	8.78	26.08	8.97	25.95	9.01	25.97	9.20	25.99	9.17	26.01	9.23
	46	22.22	8.18	22.34	8.48	24.17	8.78	24.69	8.94	24.06	9.01	23.14	9.16	22.72	9.16	22.30	9.18
	48	21.80	6.75	21.51	6.97	23.34	7.18	23.77	7.31	22.81	7.37	21.26	7.50	20.54	7.50	19.82	7.51

RAS-10FSXNME

	To/ Ti	14		16		18		19		20		22		23		24	
		CAP	IPT	CAP	IPT	CAP	IPT	CAP	IPT	CAP	IPT	CAP	IPT	CAP	IPT	CAP	IPT
100%	10	24.89	5.46	26.37	5.56	28.35	5.90	29.28	5.96	30.13	6.10	32.20	6.17	33.17	6.24	34.14	6.28
	12	24.89	5.46	26.37	5.56	28.35	5.90	29.28	5.98	30.13	6.12	32.20	6.17	33.17	6.24	34.14	6.28
	14	24.89	5.49	26.37	5.57	28.35	5.91	29.28	5.99	30.13	6.13	32.20	6.19	33.17	6.26	34.14	6.30
	16	24.89	5.51	26.37	5.60	28.35	5.96	29.28	6.02	30.13	6.16	32.20	6.22	33.17	6.29	34.14	6.33
	18	24.89	5.54	26.37	5.64	28.35	5.99	29.28	6.07	30.13	6.21	32.20	6.28	33.17	6.35	34.14	6.38
	20	24.89	5.60	26.62	5.70	28.35	6.06	29.28	6.13	30.13	6.27	32.20	6.33	33.17	6.40	34.14	6.43
	22	24.80	5.67	26.52	5.77	28.25	6.12	29.17	6.19	30.01	6.33	32.07	6.41	33.04	6.48	34.01	6.51
	24	24.70	5.74	26.42	5.84	28.14	6.21	29.06	6.28	29.90	6.43	31.95	6.49	32.91	6.56	33.87	6.60
	25	24.66	5.79	26.37	5.89	28.08	6.26	29.00	6.32	29.84	6.47	31.89	6.55	32.85	6.62	33.81	6.65
	26	24.60	5.82	26.31	5.94	28.03	6.30	28.94	6.37	29.79	6.52	31.84	6.59	32.80	6.66	33.76	6.70
	28	24.48	5.92	26.19	6.02	27.93	6.39	28.80	6.46	29.69	6.61	31.74	6.68	32.70	6.75	33.66	6.79
	30	24.36	6.01	26.08	6.11	27.83	6.47	28.67	6.55	29.59	6.69	31.64	6.76	32.60	6.84	33.56	6.89
	32	24.05	6.29	25.76	6.40	27.52	6.76	28.40	6.84	29.32	6.98	31.35	7.06	32.31	7.13	33.27	7.17
	34	23.73	6.57	25.44	6.69	27.20	7.06	28.13	7.13	29.05	7.27	31.07	7.35	32.03	7.42	32.99	7.46
	35	23.57	6.72	25.28	6.84	27.04	7.20	28.00	7.27	28.92	7.41	30.93	7.47	31.89	7.54	32.85	7.60
	36	23.37	6.87	25.07	7.00	26.83	7.35	27.77	7.43	28.60	7.56	30.45	7.65	31.33	7.71	32.22	7.75
	38	22.97	7.18	24.66	7.32	26.41	7.64	27.30	7.75	27.97	7.85	29.50	7.97	30.23	8.00	30.97	8.05
	40	22.57	7.49	24.24	7.62	25.99	7.91	26.83	8.06	27.33	8.14	28.54	8.29	29.13	8.29	29.71	8.36
	43	21.97	7.97	22.67	8.10	24.43	8.37	25.07	8.54	24.95	8.58	24.97	8.76	24.99	8.73	25.01	8.79
	46	21.36	7.79	21.48	8.08	23.24	8.36	23.74	8.52	23.14	8.58	22.25	8.72	21.85	8.72	21.44	8.75
	48	20.96	6.43	20.69	6.63	22.44	6.84	22.85	6.96	21.93	7.02	20.44	7.14	19.75	7.14	19.06	7.15
90%	10	22.40	4.73	23.73	4.82	25.52	5.11	26.35	5.17	27.12	5.29	28.98	5.35	29.85	5.41	30.72	5.44
	12	22.40	4.73	23.73	4.82	25.52	5.11	26.35	5.18	27.12	5.30	28.98	5.35	29.85	5.41	30.72	5.44
	14	22.40	4.75	23.73	4.83	25.52	5.12	26.35	5.19	27.12	5.32	28.98	5.36	29.85	5.42	30.72	5.46
	16	22.40	4.78	23.73	4.85	25.52	5.16	26.35	5.22	27.12	5.34	28.98	5.39	29.85	5.45	30.72	5.49
	18	22.40	4.80	23.73	4.89	25.52	5.19	26.35	5.26	27.12	5.38	28.98	5.45	29.85	5.50	30.72	5.53
	20	22.40	4.85	23.96	4.94	25.52	5.25	26.35	5.31	27.12	5.44	28.98	5.49	29.85	5.55	30.72	5.57
	22	22.32	4.92	23.87	5.00	25.42	5.31	26.25	5.36	27.01	5.49	28.86	5.56	29.74	5.62	30.61	5.64
	24	22.23	4.98	23.78	5.07	25.32	5.38	26.15	5.44	26.91	5.57	28.75	5.63	29.62	5.69	30.49	5.72
	25	22.19	5.02	23.73	5.11	25.28	5.42	26.10	5.48	26.85	5.61	28.70	5.68	29.56	5.73	30.43	5.77
	26	22.14	5.05	23.68	5.15	25.23	5.46	26.04	5.52	26.81	5.65	28.65	5.71	29.52	5.78	30.38	5.81
	28	22.03	5.13	23.58	5.22	25.14	5.54	25.92	5.60	26.72	5.72	28.56	5.79	29.43	5.85	30.29	5.89
	30	21.93	5.21	23.47	5.29	25.05	5.61	25.80	5.68	26.63	5.80	28.47	5.86	29.34	5.93	30.20	5.97
	32	21.64	5.45	23.18	5.55	24.76	5.86	25.56	5.93	26.39	6.05	28.22	6.11	29.08	6.18	29.95	6.22
	34	21.36	5.70	22.90	5.80	24.48	6.11	25.32	6.18	26.15	6.30	27.96	6.37	28.83	6.43	29.69	6.46
	35	21.21	5.82	22.76	5.93	24.33	6.24	25.20	6.30	26.03	6.43	27.83	6.47	28.70	6.54	29.56	6.58
	36	21.03	5.96	22.57	6.06	24.15	6.37	24.99	6.44	25.74	6.55	27.40	6.63	28.20	6.68	29.00	6.72
	38	20.67	6.22	22.19	6.34	23.77	6.62	24.57	6.72	25.17	6.81	26.55	6.91	27.21	6.93	27.87	6.98
	40	20.31	6.49	21.81	6.60	23.39	6.86	24.15	6.99	24.60	7.05	25.69	7.18	26.22	7.18	26.74	7.24
	43	19.77	6.91	20.40	7.02	21.98	7.25	22.57	7.40	22.45	7.43	22.47	7.59	22.49	7.57	22.51	7.62
	46	19.23	6.75	19.33	7.00	20.91	7.24	21.37	7.38	20.82	7.43	20.03	7.56	19.66	7.56	19.29	7.58
	48	18.87	5.58	18.62	5.75	20.20	5.93	20.57	6.03	19.74	6.08	18.40	6.19	17.78	6.19	17.15	6.20
80%	10	19.91	4.04	21.10	4.12	22.68	4.37	23.43	4.41	24.10	4.52	25.76	4.57	26.53	4.62	27.31	4.65
	12	19.91	4.04	21.10	4.12	22.68	4.37	23.43	4.43	24.10	4.53	25.76	4.57	26.53	4.62	27.31	4.65
	14	19.91	4.06	21.10	4.13	22.68	4.38	23.43	4.44	24.10	4.54	25.76	4.58	26.53	4.64	27.31	4.66
	16	19.91	4.08	21.10	4.15	22.68	4.41	23.43	4.46	24.10	4.56	25.76	4.61	26.53	4.66	27.31	4.69
	18	19.91	4.10	21.10	4.18	22.68	4.43	23.43	4.49	24.10	4.60	25.76	4.65	26.53	4.70	27.31	4.72
	20	19.91	4.15	21.30	4.22	22.68	4.49	23.43	4.54	24.10	4.65	25.76	4.69	26.53	4.74	27.31	4.76
	22	19.84	4.20	21.22	4.27	22.60	4.53	23.34	4.58	24.01	4.69	25.66	4.75	26.43	4.80	27.20	4.82
	24	19.76	4.25	21.14	4.33	22.51	4.60	23.25	4.65	23.92	4.76	25.56	4.81	26.33	4.86	27.10	4.88
	25	19.73	4.29	21.10	4.36	22.47	4.63	23.20	4.68	23.87	4.79	25.51	4.85	26.28	4.90	27.05	4.93
	26	19.68	4.31	21.05	4.40	22.43	4.67	23.15	4.72	23.83	4.83	25.47	4.88	26.24	4.93	27.01	4.96
	28	19.58	4.39	20.96	4.46	22.35	4.73	23.04	4.78	23.75	4.89	25.39	4.95	26.16	5.00	26.93	5.03
	30	19.49	4.45	20.86	4.52	22.27	4.79	22.93	4.85	23.67	4.95	25.31	5.01	26.08	5.07	26.85	5.10
	32	19.24	4.65	20.61	4.74	22.01	5.01	22.72	5.06	23.46	5.17	25.08	5.22	25.85	5.28	26.62	5.31
	34	18.98	4.87	20.35	4.96	21.76	5.22	22.51	5.28	23.24	5.39	24.85	5.44	25.62	5.49	26.39	5.52
	35	18.86	4.97	20.23	5.07	21.63	5.33	22.40	5.39	23.14	5.49	24.74	5.53	25.51	5.58	26.28	5.63
	36	18.70	5.09	20.06	5.18	21.46	5.44	22.21	5.50	22.88	5.60	24.36	5.67	25.07	5.71	25.78	5.74
	38	18.37	5.31	19.73	5.42	21.13	5.65	21.84	5.74	22.37	5.82	23.60	5.90	24.19	5.92	24.77	5.96
	40	18.05	5.55	19.39	5.64	20.80	5.86	21.46	5.97	21.87	6.03	22.83	6.14	23.30	6.14	23.77	6.19
	43	17.57	5.90	18.14	6.00	19.54	6.20	20.06	6.32	19.96	6.35	19.98	6.49	19.99	6.46	20.01	6.51
	46	17.09	5.77	17.18	5.98	18.59	6.19	18.99	6.31	18.51	6.35	17.80	6.46	17.48	6.46	17.15	6.48
	48	16.77	4.76	16.55	4.91	17.95	5.06	18.28	5.16	17.55	5.20	16.36	5.29	15.80	5.29	15.25	5.29

RAS-10FSXNME

	To/ Ti	14		16		18		19		20		22		23		24	
		CAP	IPT	CAP	IPT	CAP	IPT	CAP	IPT	CAP	IPT	CAP	IPT	CAP	IPT	CAP	IPT
70%	10	17.42	3.39	18.46	3.45	19.85	3.66	20.50	3.70	21.09	3.79	22.54	3.83	23.22	3.88	23.90	3.90
	12	17.42	3.39	18.46	3.45	19.85	3.66	20.50	3.71	21.09	3.80	22.54	3.83	23.22	3.88	23.90	3.90
	14	17.42	3.41	18.46	3.46	19.85	3.67	20.50	3.72	21.09	3.81	22.54	3.84	23.22	3.89	23.90	3.91
	16	17.42	3.42	18.46	3.48	19.85	3.70	20.50	3.74	21.09	3.83	22.54	3.86	23.22	3.91	23.90	3.93
	18	17.42	3.44	18.46	3.50	19.85	3.72	20.50	3.77	21.09	3.86	22.54	3.90	23.22	3.94	23.90	3.96
	20	17.42	3.48	18.64	3.54	19.85	3.77	20.50	3.81	21.09	3.90	22.54	3.93	23.22	3.97	23.90	3.99
	22	17.36	3.52	18.57	3.58	19.77	3.80	20.42	3.84	21.01	3.93	22.45	3.98	23.13	4.02	23.80	4.04
	24	17.29	3.57	18.49	3.63	19.70	3.86	20.34	3.90	20.93	3.99	22.36	4.03	23.04	4.08	23.71	4.10
	25	17.26	3.59	18.46	3.66	19.66	3.89	20.30	3.93	20.89	4.02	22.32	4.07	22.99	4.11	23.67	4.13
	26	17.22	3.62	18.42	3.69	19.62	3.91	20.26	3.96	20.85	4.05	22.29	4.09	22.96	4.14	23.63	4.16
	28	17.14	3.68	18.34	3.74	19.55	3.97	20.16	4.01	20.78	4.10	22.22	4.15	22.89	4.19	23.56	4.22
	30	17.05	3.73	18.25	3.79	19.48	4.02	20.07	4.07	20.71	4.16	22.15	4.20	22.82	4.25	23.49	4.28
	32	16.83	3.90	18.03	3.98	19.26	4.20	19.88	4.25	20.52	4.34	21.95	4.38	22.62	4.43	23.29	4.45
	34	16.61	4.08	17.81	4.16	19.04	4.38	19.69	4.43	20.34	4.52	21.75	4.56	22.42	4.61	23.09	4.63
	35	16.50	4.17	17.70	4.25	18.93	4.47	19.60	4.52	20.24	4.60	21.65	4.64	22.32	4.68	22.99	4.72
	36	16.36	4.27	17.55	4.35	18.78	4.56	19.44	4.62	20.02	4.70	21.31	4.75	21.93	4.79	22.55	4.81
	38	16.08	4.46	17.26	4.54	18.49	4.74	19.11	4.81	19.58	4.88	20.65	4.95	21.16	4.97	21.68	5.00
	40	15.80	4.65	16.97	4.73	18.20	4.92	18.78	5.01	19.13	5.05	19.98	5.15	20.39	5.15	20.80	5.19
	43	15.38	4.95	15.87	5.03	17.10	5.20	17.55	5.30	17.46	5.33	17.48	5.44	17.49	5.42	17.51	5.46
	46	14.95	4.84	15.04	5.02	16.27	5.19	16.62	5.29	16.20	5.33	15.58	5.42	15.29	5.42	15.01	5.43
	48	14.67	4.00	14.48	4.12	15.71	4.25	16.00	4.32	15.35	4.36	14.31	4.43	13.83	4.43	13.34	4.44
60%	10	14.94	2.77	15.82	2.82	17.01	2.99	17.57	3.03	18.08	3.10	19.32	3.13	19.90	3.17	20.48	3.19
	12	14.94	2.77	15.82	2.82	17.01	2.99	17.57	3.03	18.08	3.11	19.32	3.13	19.90	3.17	20.48	3.19
	14	14.94	2.78	15.82	2.83	17.01	3.00	17.57	3.04	18.08	3.11	19.32	3.14	19.90	3.18	20.48	3.20
	16	14.94	2.80	15.82	2.84	17.01	3.02	17.57	3.06	18.08	3.13	19.32	3.16	19.90	3.19	20.48	3.21
	18	14.94	2.81	15.82	2.87	17.01	3.04	17.57	3.08	18.08	3.15	19.32	3.19	19.90	3.22	20.48	3.24
	20	14.94	2.84	15.97	2.89	17.01	3.08	17.57	3.11	18.08	3.18	19.32	3.21	19.90	3.25	20.48	3.26
	22	14.88	2.88	15.91	2.93	16.95	3.11	17.50	3.14	18.01	3.22	19.24	3.25	19.82	3.29	20.40	3.31
	24	14.82	2.92	15.85	2.97	16.88	3.15	17.44	3.19	17.94	3.26	19.17	3.30	19.75	3.33	20.32	3.35
	25	14.79	2.94	15.82	2.99	16.85	3.18	17.40	3.21	17.90	3.29	19.13	3.32	19.71	3.36	20.29	3.38
	26	14.76	2.96	15.79	3.01	16.82	3.20	17.36	3.24	17.87	3.31	19.10	3.35	19.68	3.38	20.26	3.40
	28	14.69	3.01	15.72	3.06	16.76	3.24	17.28	3.28	17.81	3.35	19.04	3.39	19.62	3.43	20.20	3.45
	30	14.62	3.05	15.65	3.10	16.70	3.29	17.20	3.32	17.75	3.40	18.98	3.43	19.56	3.47	20.13	3.50
	32	14.43	3.19	15.46	3.25	16.51	3.43	17.04	3.47	17.59	3.55	18.81	3.58	19.39	3.62	19.96	3.64
	34	14.24	3.34	15.27	3.40	16.32	3.58	16.88	3.62	17.43	3.69	18.64	3.73	19.22	3.77	19.79	3.79
	35	14.14	3.41	15.17	3.47	16.22	3.65	16.80	3.69	17.35	3.76	18.56	3.79	19.13	3.83	19.71	3.86
	36	14.02	3.49	15.04	3.55	16.10	3.73	16.66	3.77	17.16	3.84	18.27	3.88	18.80	3.91	19.33	3.93
	38	13.78	3.64	14.79	3.71	15.85	3.88	16.38	3.94	16.78	3.99	17.70	4.05	18.14	4.06	18.58	4.09
	40	13.54	3.80	14.54	3.87	15.60	4.02	16.10	4.09	16.40	4.13	17.13	4.21	17.48	4.21	17.83	4.24
	43	13.18	4.05	13.60	4.11	14.66	4.25	15.04	4.33	14.97	4.35	14.98	4.45	14.99	4.43	15.01	4.46
	46	12.82	3.96	12.89	4.10	13.94	4.24	14.24	4.32	13.88	4.36	13.35	4.43	13.11	4.43	12.86	4.44
	48	12.58	3.27	12.41	3.37	13.47	3.47	13.71	3.54	13.16	3.56	12.27	3.62	11.85	3.62	11.43	3.63
50%	10	12.45	2.18	13.19	2.22	14.18	2.36	14.64	2.38	15.06	2.44	16.10	2.47	16.58	2.50	17.07	2.51
	12	12.45	2.18	13.19	2.22	14.18	2.36	14.64	2.39	15.06	2.45	16.10	2.47	16.58	2.50	17.07	2.51
	14	12.45	2.19	13.19	2.23	14.18	2.37	14.64	2.40	15.06	2.45	16.10	2.47	16.58	2.50	17.07	2.52
	16	12.45	2.21	13.19	2.24	14.18	2.38	14.64	2.41	15.06	2.47	16.10	2.49	16.58	2.52	17.07	2.53
	18	12.45	2.22	13.19	2.26	14.18	2.40	14.64	2.43	15.06	2.48	16.10	2.51	16.58	2.54	17.07	2.55
	20	12.45	2.24	13.31	2.28	14.18	2.42	14.64	2.45	15.06	2.51	16.10	2.53	16.58	2.56	17.07	2.57
	22	12.40	2.27	13.26	2.31	14.12	2.45	14.59	2.47	15.01	2.53	16.04	2.56	16.52	2.59	17.00	2.60
	24	12.35	2.30	13.21	2.34	14.07	2.48	14.53	2.51	14.95	2.57	15.97	2.60	16.46	2.62	16.94	2.64
	25	12.33	2.31	13.19	2.36	14.04	2.50	14.50	2.53	14.92	2.59	15.94	2.62	16.42	2.65	16.90	2.66
	26	12.30	2.33	13.16	2.38	14.02	2.52	14.47	2.55	14.89	2.61	15.92	2.64	16.40	2.67	16.88	2.68
	28	12.24	2.37	13.10	2.41	13.97	2.56	14.40	2.58	14.84	2.64	15.87	2.67	16.35	2.70	16.83	2.72
	30	12.18	2.40	13.04	2.44	13.92	2.59	14.33	2.62	14.79	2.68	15.82	2.71	16.30	2.74	16.78	2.76
	32	12.02	2.51	12.88	2.56	13.76	2.71	14.20	2.73	14.66	2.79	15.68	2.82	16.16	2.85	16.64	2.87
	34	11.86	2.63	12.72	2.68	13.60	2.82	14.07	2.85	14.53	2.91	15.53	2.94	16.01	2.97	16.49	2.98
	35	11.79	2.69	12.64	2.74	13.52	2.88	14.00	2.91	14.46	2.97	15.46	2.99	15.94	3.02	16.42	3.04
	36	11.68	2.75	12.54	2.80	13.41	2.94	13.88	2.97	14.30	3.03	15.22	3.06	15.67	3.08	16.11	3.10
	38	11.48	2.87	12.33	2.93	13.21	3.05	13.65	3.10	13.98	3.14	14.75	3.19	15.12	3.20	15.48	3.22
	40	11.28	3.00	12.12	3.05	13.00	3.17	13.41	3.23	13.67	3.26	14.27	3.32	14.56	3.32	14.86	3.34
	43	10.98	3.19	11.34	3.24	12.21	3.35	12.54	3.42	12.47	3.43	12.49	3.50	12.50	3.49	12.51	3.52
	46	10.68	3.12	10.74	3.23	11.62	3.34	11.87	3.41	11.57	3.43	11.13	3.49	10.92	3.49	10.72	3.50
	48	10.48	2.57	10.34	2.65	11.22	2.73	11.43	2.79	10.97	2.81	10.22	2.86	9.88	2.86	9.53	2.86

◆ RAS-12FSXNME

	To/ Ti	14		16		18		19		20		22		23		24	
		CAP	IPT	CAP	IPT	CAP	IPT	CAP	IPT	CAP	IPT	CAP	IPT	CAP	IPT	CAP	IPT
130%	10	31.57	7.51	33.44	7.64	35.96	8.11	37.14	8.20	38.21	8.39	40.83	8.49	42.06	8.59	43.29	8.65
	12	31.57	7.51	33.44	7.64	35.96	8.11	37.14	8.22	38.21	8.41	40.83	8.49	42.06	8.59	43.29	8.65
	14	31.57	7.54	33.44	7.66	35.96	8.13	37.14	8.24	38.21	8.43	40.83	8.51	42.06	8.61	43.29	8.67
	16	31.57	7.58	33.44	7.70	35.96	8.20	37.14	8.28	38.21	8.47	40.83	8.55	42.06	8.66	43.29	8.72
	18	31.57	7.62	33.44	7.76	35.96	8.24	37.14	8.34	38.21	8.54	40.83	8.64	42.06	8.74	43.29	8.79
	20	31.57	7.70	33.76	7.84	35.96	8.34	37.14	8.42	38.21	8.62	40.83	8.71	42.06	8.80	43.29	8.86
	22	31.45	7.80	33.64	7.94	35.82	8.42	37.00	8.51	38.06	8.71	40.67	8.82	41.90	8.92	43.13	8.97
	24	31.33	7.90	33.51	8.04	35.68	8.55	36.85	8.63	37.92	8.84	40.52	8.93	41.74	9.03	42.96	9.09
	25	31.27	7.96	33.44	8.10	35.62	8.61	36.78	8.70	37.84	8.91	40.44	9.00	41.66	9.10	42.88	9.17
	26	31.20	8.01	33.37	8.17	35.55	8.67	36.70	8.76	37.78	8.96	40.38	9.06	41.59	9.17	42.81	9.23
	28	31.05	8.15	33.22	8.28	35.43	8.78	36.53	8.88	37.65	9.08	40.25	9.19	41.47	9.28	42.69	9.36
	30	30.90	8.26	33.07	8.40	35.30	8.91	36.36	9.00	37.52	9.21	40.12	9.31	41.34	9.40	42.56	9.49
	32	30.50	8.64	32.67	8.80	34.90	9.30	36.02	9.40	37.18	9.60	39.76	9.70	40.98	9.79	42.20	9.89
	34	30.09	9.04	32.27	9.20	34.49	9.71	35.68	9.80	36.85	10.00	39.40	10.09	40.62	10.19	41.84	10.28
	35	29.89	9.23	32.07	9.40	34.29	9.91	35.51	10.00	36.68	10.20	39.22	10.30	40.44	10.39	41.66	10.48
	36	29.64	9.45	31.80	9.62	34.03	10.12	35.21	10.23	36.27	10.40	38.62	10.51	39.74	10.59	40.86	10.67
	38	29.13	9.85	31.27	10.05	33.50	10.53	34.62	10.68	35.47	10.82	37.41	10.97	38.34	11.00	39.27	11.04
	40	28.62	10.28	30.74	10.49	32.97	10.88	34.03	11.07	34.66	11.17	36.20	11.36	36.94	11.36	37.68	11.42
	43	26.53	10.90	28.75	11.17	30.98	11.53	31.80	11.75	31.64	11.80	31.67	12.14	31.69	12.01	31.72	12.05
	46	25.02	10.72	27.24	11.08	29.47	11.48	30.11	11.67	29.35	11.77	28.22	11.97	27.71	11.97	27.19	12.03
	48	24.01	8.51	26.24	8.80	28.46	9.10	28.98	9.25	27.81	9.32	25.93	9.45	25.05	9.45	24.17	9.52
120%	10	31.27	7.43	33.13	7.57	35.62	8.04	36.79	8.12	37.85	8.31	40.45	8.41	41.67	8.51	42.89	8.57
	12	31.27	7.43	33.13	7.57	35.62	8.04	36.79	8.14	37.85	8.33	40.45	8.41	41.67	8.51	42.89	8.57
	14	31.27	7.47	33.13	7.59	35.62	8.06	36.79	8.16	37.85	8.35	40.45	8.43	41.67	8.53	42.89	8.59
	16	31.27	7.51	33.13	7.63	35.62	8.12	36.79	8.20	37.85	8.39	40.45	8.47	41.67	8.58	42.89	8.64
	18	31.27	7.55	33.13	7.69	35.62	8.16	36.79	8.26	37.85	8.46	40.45	8.56	41.67	8.65	42.89	8.71
	20	31.27	7.63	33.45	7.77	35.62	8.26	36.79	8.34	37.85	8.54	40.45	8.63	41.67	8.72	42.89	8.77
	22	31.15	7.73	33.32	7.87	35.48	8.34	36.65	8.43	37.70	8.63	40.29	8.73	41.51	8.83	42.72	8.89
	24	31.03	7.83	33.19	7.96	35.35	8.47	36.51	8.55	37.56	8.75	40.14	8.84	41.35	8.94	42.56	9.00
	25	30.98	7.88	33.13	8.03	35.28	8.53	36.44	8.62	37.49	8.82	40.06	8.92	41.27	9.02	42.47	9.08
	26	30.90	7.93	33.05	8.09	35.22	8.59	36.35	8.68	37.42	8.88	39.99	8.98	41.20	9.08	42.41	9.15
	28	30.75	8.07	32.91	8.21	35.09	8.70	36.18	8.80	37.30	9.00	39.87	9.10	41.08	9.20	42.28	9.28
	30	30.61	8.19	32.76	8.32	34.97	8.82	36.02	8.92	37.17	9.12	39.74	9.22	40.95	9.31	42.16	9.41
	32	30.21	8.56	32.36	8.72	34.57	9.22	35.68	9.32	36.83	9.51	39.39	9.61	40.59	9.70	41.80	9.79
	34	29.81	8.95	31.96	9.11	34.17	9.62	35.34	9.71	36.50	9.90	39.03	10.00	40.24	10.09	41.44	10.18
	35	29.61	9.15	31.76	9.31	33.97	9.81	35.18	9.91	36.33	10.10	38.85	10.20	40.06	10.30	41.27	10.38
	36	29.36	9.36	31.50	9.53	33.71	10.02	34.88	10.14	35.93	10.30	38.25	10.42	39.36	10.49	40.48	10.57
	38	28.85	9.76	30.98	9.95	33.18	10.43	34.29	10.58	35.13	10.72	37.05	10.86	37.98	10.90	38.90	10.94
	40	28.35	10.18	30.45	10.39	32.66	10.78	33.71	10.97	34.34	11.07	35.86	11.26	36.59	11.26	37.33	11.31
	43	26.28	10.80	28.48	11.07	30.69	11.42	31.50	11.64	31.34	11.69	31.37	12.03	31.40	11.90	31.42	11.94
	46	24.78	10.62	26.99	10.98	29.19	11.37	29.82	11.56	29.07	11.66	27.96	11.85	27.44	11.85	26.93	11.92
	48	23.78	8.43	25.99	8.72	28.19	9.01	28.71	9.17	27.55	9.23	25.68	9.36	24.81	9.36	23.94	9.43
110%	10	30.97	7.36	32.81	7.50	35.28	7.96	36.44	8.04	37.49	8.23	40.06	8.33	41.27	8.43	42.48	8.49
	12	30.97	7.36	32.81	7.50	35.28	7.96	36.44	8.06	37.49	8.25	40.06	8.33	41.27	8.43	42.48	8.49
	14	30.97	7.40	32.81	7.52	35.28	7.98	36.44	8.08	37.49	8.27	40.06	8.35	41.27	8.45	42.48	8.51
	16	30.97	7.44	32.81	7.56	35.28	8.04	36.44	8.12	37.49	8.31	40.06	8.39	41.27	8.50	42.48	8.56
	18	30.97	7.48	32.81	7.62	35.28	8.08	36.44	8.18	37.49	8.38	40.06	8.48	41.27	8.57	42.48	8.62
	20	30.97	7.56	33.13	7.69	35.28	8.18	36.44	8.27	37.49	8.46	40.06	8.54	41.27	8.64	42.48	8.69
	22	30.86	7.66	33.00	7.79	35.15	8.26	36.30	8.35	37.34	8.55	39.91	8.65	41.11	8.75	42.31	8.80
	24	30.74	7.75	32.87	7.89	35.01	8.39	36.16	8.47	37.20	8.67	39.75	8.76	40.95	8.86	42.15	8.92
	25	30.68	7.81	32.81	7.95	34.94	8.44	36.09	8.54	37.13	8.74	39.68	8.84	40.87	8.93	42.07	8.99
	26	30.61	7.86	32.74	8.01	34.88	8.50	36.00	8.60	37.07	8.79	39.61	8.90	40.81	9.00	42.01	9.06
	28	30.46	7.99	32.59	8.13	34.76	8.62	35.84	8.72	36.94	8.91	39.49	9.01	40.68	9.11	41.88	9.19
	30	30.32	8.11	32.45	8.24	34.63	8.74	35.67	8.84	36.82	9.04	39.36	9.13	40.56	9.23	41.76	9.32
	32	29.92	8.48	32.05	8.64	34.24	9.13	35.34	9.23	36.48	9.42	39.01	9.52	40.21	9.61	41.40	9.70
	34	29.53	8.87	31.66	9.03	33.84	9.53	35.01	9.62	36.15	9.81	38.66	9.90	39.85	10.00	41.05	10.09
	35	29.33	9.06	31.46	9.23	33.64	9.72	34.84	9.82	35.98	10.01	38.48	10.10	39.68	10.20	40.87	10.28
	36	29.08	9.27	31.20	9.44	33.38	9.93	34.55	10.04	35.59	10.21	37.89	10.32	38.99	10.39	40.09	10.47
	38	28.58	9.67	30.68	9.86	32.86	10.34	33.97	10.48	34.80	10.61	36.70	10.76	37.62	10.80	38.53	10.84
	40	28.08	10.09	30.16	10.29	32.34	10.68	33.38	10.87	34.01	10.96	35.52	11.15	36.24	11.15	36.97	11.21
	43	26.03	10.70	28.21	10.97	30.39	11.31	31.20	11.53	31.04	11.58	31.07	11.91	31.10	11.79	31.12	11.82
	46	24.54	10.52	26.73	10.88	28.91	11.26	29.54	11.45	28.79	11.55	27.69	11.74	27.18	11.74	26.68	11.81
	48	23.56	8.35	25.74	8.64	27.92	8.93	28.43	9.08	27.29	9.15	25.44	9.27	24.58	9.27	23.71	9.34

RAS-12FSXNME

	To/ Ti	14		16		18		19		20		22		23		24	
		CAP	IPT	CAP	IPT	CAP	IPT	CAP	IPT	CAP	IPT	CAP	IPT	CAP	IPT	CAP	IPT
100%	10	29.78	7.01	31.55	7.14	33.92	7.58	35.04	7.66	36.05	7.84	38.52	7.93	39.68	8.03	40.84	8.08
	12	29.78	7.01	31.55	7.14	33.92	7.58	35.04	7.68	36.05	7.86	38.52	7.93	39.68	8.03	40.84	8.08
	14	29.78	7.05	31.55	7.16	33.92	7.60	35.04	7.70	36.05	7.88	38.52	7.95	39.68	8.05	40.84	8.11
	16	29.78	7.09	31.55	7.20	33.92	7.66	35.04	7.74	36.05	7.92	38.52	7.99	39.68	8.09	40.84	8.15
	18	29.78	7.12	31.55	7.25	33.92	7.70	35.04	7.80	36.05	7.98	38.52	8.08	39.68	8.16	40.84	8.21
	20	29.78	7.20	31.85	7.33	33.92	7.79	35.04	7.87	36.05	8.06	38.52	8.14	39.68	8.23	40.84	8.28
	22	29.67	7.29	31.73	7.42	33.79	7.87	34.90	7.95	35.91	8.14	38.37	8.24	39.53	8.33	40.69	8.38
	24	29.56	7.38	31.61	7.51	33.66	7.99	34.77	8.07	35.77	8.26	38.22	8.34	39.38	8.44	40.53	8.49
	25	29.50	7.44	31.55	7.57	33.60	8.04	34.70	8.13	35.70	8.32	38.15	8.42	39.30	8.51	40.45	8.57
	26	29.43	7.48	31.48	7.63	33.54	8.10	34.62	8.19	35.64	8.37	38.09	8.47	39.24	8.57	40.39	8.63
	28	29.29	7.61	31.34	7.74	33.42	8.21	34.46	8.30	35.52	8.49	37.97	8.58	39.12	8.68	40.27	8.75
	30	29.15	7.72	31.20	7.85	33.30	8.32	34.30	8.42	35.40	8.61	37.85	8.70	39.00	8.79	40.15	8.87
	32	28.77	8.07	30.82	8.22	32.92	8.70	33.98	8.79	35.08	8.97	37.51	9.06	38.66	9.15	39.81	9.24
	34	28.39	8.44	30.44	8.60	32.54	9.07	33.66	9.16	34.76	9.34	37.17	9.43	38.32	9.52	39.47	9.61
	35	28.20	8.63	30.25	8.79	32.35	9.26	33.50	9.35	34.60	9.53	37.00	9.62	38.15	9.71	39.30	9.79
	36	27.96	8.83	30.00	8.99	32.10	9.46	33.22	9.56	34.22	9.72	36.43	9.83	37.49	9.90	38.55	9.97
	38	27.48	9.21	29.50	9.39	31.60	9.84	32.66	9.99	33.46	10.11	35.29	10.25	36.17	10.29	37.05	10.32
	40	27.00	9.61	29.00	9.80	31.10	10.17	32.10	10.35	32.70	10.44	34.15	10.62	34.85	10.62	35.55	10.67
	43	25.03	10.19	27.13	10.44	29.23	10.77	30.00	10.99	29.85	11.03	29.88	11.34	29.90	11.22	29.93	11.26
	46	23.60	10.02	25.70	10.36	27.80	10.73	28.40	10.91	27.68	11.00	26.63	11.18	26.14	11.18	25.65	11.24
	48	22.65	7.95	24.75	8.23	26.85	8.50	27.34	8.65	26.24	8.71	24.46	8.83	23.63	8.83	22.80	8.90
90%	10	26.80	6.10	28.40	6.21	30.53	6.60	31.53	6.66	32.44	6.82	34.67	6.90	35.71	6.98	36.76	7.03
	12	26.80	6.10	28.40	6.21	30.53	6.60	31.53	6.68	32.44	6.84	34.67	6.90	35.71	6.98	36.76	7.03
	14	26.80	6.13	28.40	6.23	30.53	6.61	31.53	6.70	32.44	6.85	34.67	6.92	35.71	7.00	36.76	7.05
	16	26.80	6.17	28.40	6.26	30.53	6.66	31.53	6.73	32.44	6.89	34.67	6.95	35.71	7.04	36.76	7.09
	18	26.80	6.20	28.40	6.31	30.53	6.70	31.53	6.78	32.44	6.94	34.67	7.03	35.71	7.10	36.76	7.15
	20	26.80	6.26	28.67	6.38	30.53	6.78	31.53	6.85	32.44	7.01	34.67	7.08	35.71	7.16	36.76	7.20
	22	26.70	6.34	28.56	6.46	30.41	6.85	31.41	6.92	32.32	7.08	34.53	7.17	35.58	7.25	36.62	7.29
	24	26.60	6.42	28.45	6.54	30.30	6.95	31.29	7.02	32.19	7.18	34.40	7.26	35.44	7.34	36.48	7.39
	25	26.55	6.47	28.40	6.59	30.24	7.00	31.23	7.08	32.13	7.24	34.34	7.32	35.37	7.40	36.41	7.45
	26	26.49	6.51	28.33	6.64	30.19	7.05	31.16	7.12	32.08	7.29	34.28	7.37	35.32	7.45	36.35	7.51
	28	26.36	6.62	28.21	6.73	30.08	7.14	31.01	7.22	31.97	7.38	34.17	7.47	35.21	7.55	36.24	7.61
	30	26.24	6.72	28.08	6.83	29.97	7.24	30.87	7.32	31.86	7.49	34.07	7.57	35.10	7.64	36.14	7.72
	32	25.89	7.02	27.74	7.16	29.63	7.57	30.58	7.65	31.57	7.80	33.76	7.89	34.79	7.96	35.83	8.04
	34	25.55	7.35	27.40	7.48	29.29	7.89	30.29	7.97	31.28	8.13	33.45	8.21	34.49	8.28	35.52	8.36
	35	25.38	7.51	27.23	7.64	29.12	8.06	30.15	8.13	31.14	8.29	33.30	8.37	34.34	8.45	35.37	8.52
	36	25.16	7.68	27.00	7.82	28.89	8.23	29.90	8.32	30.80	8.46	32.79	8.55	33.74	8.61	34.70	8.67
	38	24.73	8.01	26.55	8.17	28.44	8.56	29.39	8.69	30.11	8.79	31.76	8.92	32.55	8.95	33.35	8.98
	40	24.30	8.36	26.10	8.53	27.99	8.85	28.89	9.00	29.43	9.08	30.74	9.24	31.37	9.24	32.00	9.29
	43	22.52	8.86	24.41	9.09	26.30	9.37	27.00	9.56	26.87	9.59	26.89	9.87	26.91	9.77	26.93	9.80
	46	21.24	8.72	23.13	9.01	25.02	9.33	25.56	9.49	24.92	9.57	23.96	9.73	23.52	9.73	23.09	9.78
	48	20.39	6.92	22.28	7.16	24.17	7.40	24.61	7.52	23.62	7.58	22.01	7.68	21.27	7.68	20.52	7.74
80%	10	23.83	5.19	25.24	5.29	27.14	5.61	28.03	5.67	28.84	5.80	30.82	5.87	31.75	5.94	32.67	5.98
	12	23.83	5.19	25.24	5.29	27.14	5.61	28.03	5.68	28.84	5.82	30.82	5.87	31.75	5.94	32.67	5.98
	14	23.83	5.22	25.24	5.30	27.14	5.63	28.03	5.70	28.84	5.83	30.82	5.88	31.75	5.96	32.67	6.00
	16	23.83	5.25	25.24	5.33	27.14	5.67	28.03	5.73	28.84	5.86	30.82	5.91	31.75	5.99	32.67	6.03
	18	23.83	5.27	25.24	5.37	27.14	5.70	28.03	5.77	28.84	5.90	30.82	5.98	31.75	6.04	32.67	6.08
	20	23.83	5.33	25.48	5.42	27.14	5.77	28.03	5.83	28.84	5.96	30.82	6.02	31.75	6.09	32.67	6.13
	22	23.74	5.40	25.39	5.49	27.04	5.82	27.92	5.88	28.73	6.02	30.70	6.10	31.62	6.17	32.55	6.20
	24	23.65	5.46	25.29	5.56	26.93	5.91	27.81	5.97	28.62	6.11	30.58	6.17	31.50	6.24	32.42	6.28
	25	23.60	5.50	25.24	5.60	26.88	5.95	27.76	6.02	28.56	6.16	30.52	6.23	31.44	6.29	32.36	6.34
	26	23.54	5.54	25.18	5.65	26.83	5.99	27.70	6.06	28.51	6.20	30.47	6.27	31.39	6.34	32.31	6.38
	28	23.43	5.63	25.07	5.73	26.74	6.07	27.57	6.14	28.42	6.28	30.38	6.35	31.30	6.42	32.22	6.48
	30	23.32	5.71	24.96	5.81	26.64	6.16	27.44	6.23	28.32	6.37	30.28	6.44	31.20	6.50	32.12	6.57
	32	23.02	5.97	24.66	6.09	26.34	6.43	27.18	6.50	28.06	6.64	30.01	6.71	30.93	6.77	31.85	6.84
	34	22.71	6.25	24.35	6.36	26.03	6.71	26.93	6.78	27.81	6.91	29.74	6.98	30.66	7.04	31.58	7.11
	35	22.56	6.39	24.20	6.50	25.88	6.85	26.80	6.92	27.68	7.05	29.60	7.12	30.52	7.19	31.44	7.25
	36	22.37	6.53	24.00	6.65	25.68	7.00	26.58	7.08	27.38	7.19	29.14	7.27	29.99	7.32	30.84	7.38
	38	21.98	6.81	23.60	6.95	25.28	7.28	26.13	7.39	26.77	7.48	28.23	7.58	28.94	7.61	29.64	7.64
	40	21.60	7.11	23.20	7.25	24.88	7.52	25.68	7.66	26.16	7.73	27.32	7.86	27.88	7.86	28.44	7.90
	43	20.02	7.54	21.70	7.73	23.38	7.97	24.00	8.13	23.88	8.16	23.90	8.39	23.92	8.31	23.94	8.33
	46	18.88	7.41	20.56	7.67	22.24	7.94	22.72	8.07	22.15	8.14	21.30	8.28	20.91	8.28	20.52	8.32
	48	18.12	5.88	19.80	6.09	21.48	6.29	21.87	6.40	20.99	6.45	19.57	6.53	18.90	6.53	18.24	6.58

RAS-12FSXNME

	To/ Ti	14		16		18		19		20		22		23		24	
		CAP	IPT	CAP	IPT	CAP	IPT	CAP	IPT	CAP	IPT	CAP	IPT	CAP	IPT	CAP	IPT
70%	10	20.85	4.35	22.09	4.43	23.75	4.70	24.52	4.75	25.23	4.86	26.96	4.92	27.78	4.98	28.59	5.01
	12	20.85	4.35	22.09	4.43	23.75	4.70	24.52	4.76	25.23	4.87	26.96	4.92	27.78	4.98	28.59	5.01
	14	20.85	4.37	22.09	4.44	23.75	4.71	24.52	4.77	25.23	4.89	26.96	4.93	27.78	4.99	28.59	5.03
	16	20.85	4.39	22.09	4.46	23.75	4.75	24.52	4.80	25.23	4.91	26.96	4.96	27.78	5.02	28.59	5.05
	18	20.85	4.42	22.09	4.50	23.75	4.77	24.52	4.83	25.23	4.95	26.96	5.01	27.78	5.06	28.59	5.09
	20	20.85	4.46	22.30	4.54	23.75	4.83	24.52	4.88	25.23	5.00	26.96	5.04	27.78	5.10	28.59	5.13
	22	20.77	4.52	22.21	4.60	23.66	4.88	24.43	4.93	25.14	5.05	26.86	5.11	27.67	5.17	28.48	5.20
	24	20.69	4.58	22.13	4.66	23.57	4.95	24.34	5.00	25.04	5.12	26.76	5.17	27.56	5.23	28.37	5.26
	25	20.65	4.61	22.09	4.69	23.52	4.99	24.29	5.04	24.99	5.16	26.71	5.22	27.51	5.27	28.32	5.31
	26	20.60	4.64	22.04	4.73	23.48	5.02	24.23	5.08	24.95	5.19	26.66	5.25	27.47	5.31	28.27	5.35
	28	20.50	4.72	21.94	4.80	23.39	5.09	24.12	5.15	24.86	5.26	26.58	5.32	27.38	5.38	28.19	5.43
	30	20.41	4.79	21.84	4.87	23.31	5.16	24.01	5.22	24.78	5.34	26.50	5.39	27.30	5.45	28.11	5.50
	32	20.14	5.01	21.57	5.10	23.04	5.39	23.79	5.45	24.56	5.56	26.26	5.62	27.06	5.67	27.87	5.73
	34	19.87	5.24	21.31	5.33	22.78	5.63	23.56	5.68	24.33	5.79	26.02	5.85	26.82	5.90	27.63	5.96
	35	19.74	5.35	21.18	5.45	22.65	5.74	23.45	5.80	24.22	5.91	25.90	5.97	26.71	6.02	27.51	6.07
	36	19.57	5.47	21.00	5.57	22.47	5.86	23.25	5.93	23.95	6.03	25.50	6.09	26.24	6.14	26.99	6.18
	38	19.24	5.71	20.65	5.82	22.12	6.10	22.86	6.19	23.42	6.27	24.70	6.35	25.32	6.38	25.94	6.40
	40	18.90	5.96	20.30	6.08	21.77	6.30	22.47	6.42	22.89	6.47	23.91	6.58	24.40	6.58	24.89	6.62
	43	17.52	6.32	18.99	6.47	20.46	6.68	21.00	6.81	20.90	6.84	20.91	7.03	20.93	6.96	20.95	6.98
	46	16.52	6.21	17.99	6.42	19.46	6.65	19.88	6.76	19.38	6.82	18.64	6.93	18.30	6.93	17.96	6.97
	48	15.86	4.93	17.33	5.10	18.80	5.27	19.14	5.36	18.37	5.40	17.12	5.47	16.54	5.47	15.96	5.52
60%	10	17.87	3.58	18.93	3.64	20.35	3.87	21.02	3.91	21.63	4.00	23.11	4.04	23.81	4.09	24.51	4.12
	12	17.87	3.58	18.93	3.64	20.35	3.87	21.02	3.92	21.63	4.01	23.11	4.04	23.81	4.09	24.51	4.12
	14	17.87	3.60	18.93	3.65	20.35	3.88	21.02	3.93	21.63	4.02	23.11	4.06	23.81	4.10	24.51	4.13
	16	17.87	3.61	18.93	3.67	20.35	3.91	21.02	3.95	21.63	4.04	23.11	4.08	23.81	4.13	24.51	4.16
	18	17.87	3.63	18.93	3.70	20.35	3.93	21.02	3.98	21.63	4.07	23.11	4.12	23.81	4.16	24.51	4.19
	20	17.87	3.67	19.11	3.74	20.35	3.98	21.02	4.01	21.63	4.11	23.11	4.15	23.81	4.20	24.51	4.22
	22	17.80	3.72	19.04	3.78	20.28	4.01	20.94	4.05	21.54	4.15	23.02	4.20	23.72	4.25	24.41	4.28
	24	17.73	3.77	18.97	3.83	20.20	4.07	20.86	4.11	21.46	4.21	22.93	4.25	23.63	4.30	24.32	4.33
	25	17.70	3.79	18.93	3.86	20.16	4.10	20.82	4.15	21.42	4.25	22.89	4.29	23.58	4.34	24.27	4.37
	26	17.66	3.82	18.89	3.89	20.12	4.13	20.77	4.18	21.38	4.27	22.85	4.32	23.54	4.37	24.23	4.40
	28	17.57	3.88	18.80	3.95	20.05	4.19	20.68	4.23	21.31	4.33	22.78	4.38	23.47	4.42	24.16	4.46
	30	17.49	3.94	18.72	4.00	19.98	4.25	20.58	4.29	21.24	4.39	22.71	4.44	23.40	4.48	24.09	4.53
	32	17.26	4.12	18.49	4.19	19.75	4.43	20.39	4.48	21.05	4.58	22.51	4.62	23.20	4.67	23.89	4.71
	34	17.03	4.31	18.26	4.39	19.52	4.63	20.20	4.67	20.86	4.76	22.30	4.81	22.99	4.85	23.68	4.90
	35	16.92	4.40	18.15	4.48	19.41	4.72	20.10	4.77	20.76	4.86	22.20	4.91	22.89	4.95	23.58	4.99
	36	16.78	4.50	18.00	4.58	19.26	4.82	19.93	4.88	20.53	4.96	21.86	5.01	22.49	5.05	23.13	5.08
	38	16.49	4.70	17.70	4.79	18.96	5.02	19.60	5.09	20.08	5.16	21.17	5.23	21.70	5.25	22.23	5.26
	40	16.20	4.90	17.40	5.00	18.66	5.19	19.26	5.28	19.62	5.32	20.49	5.42	20.91	5.42	21.33	5.44
	43	15.02	5.20	16.28	5.33	17.54	5.49	18.00	5.60	17.91	5.62	17.93	5.79	17.94	5.72	17.96	5.74
	46	14.16	5.11	15.42	5.28	16.68	5.47	17.04	5.56	16.61	5.61	15.98	5.70	15.68	5.70	15.39	5.73
	48	13.59	4.06	14.85	4.19	16.11	4.34	16.40	4.41	15.74	4.44	14.68	4.50	14.18	4.50	13.68	4.54
50%	10	14.89	2.81	15.78	2.86	16.96	3.03	17.52	3.06	18.02	3.14	19.26	3.17	19.84	3.21	20.42	3.23
	12	14.89	2.81	15.78	2.86	16.96	3.03	17.52	3.07	18.02	3.14	19.26	3.17	19.84	3.21	20.42	3.23
	14	14.89	2.82	15.78	2.86	16.96	3.04	17.52	3.08	18.02	3.15	19.26	3.18	19.84	3.22	20.42	3.24
	16	14.89	2.84	15.78	2.88	16.96	3.06	17.52	3.09	18.02	3.17	19.26	3.20	19.84	3.24	20.42	3.26
	18	14.89	2.85	15.78	2.90	16.96	3.08	17.52	3.12	18.02	3.19	19.26	3.23	19.84	3.27	20.42	3.29
	20	14.89	2.88	15.93	2.93	16.96	3.12	17.52	3.15	18.02	3.22	19.26	3.25	19.84	3.29	20.42	3.31
	22	14.83	2.92	15.87	2.97	16.90	3.15	17.45	3.18	17.95	3.26	19.19	3.30	19.76	3.33	20.34	3.35
	24	14.78	2.95	15.81	3.00	16.83	3.19	17.38	3.23	17.88	3.30	19.11	3.34	19.69	3.38	20.26	3.40
	25	14.75	2.98	15.78	3.03	16.80	3.22	17.35	3.25	17.85	3.33	19.08	3.37	19.65	3.40	20.23	3.43
	26	14.72	2.99	15.74	3.05	16.77	3.24	17.31	3.28	17.82	3.35	19.05	3.39	19.62	3.43	20.20	3.45
	28	14.65	3.04	15.67	3.10	16.71	3.28	17.23	3.32	17.76	3.39	18.99	3.43	19.56	3.47	20.14	3.50
	30	14.58	3.09	15.60	3.14	16.65	3.33	17.15	3.37	17.70	3.44	18.93	3.48	19.50	3.51	20.08	3.55
	32	14.39	3.23	15.41	3.29	16.46	3.48	16.99	3.52	17.54	3.59	18.76	3.63	19.33	3.66	19.91	3.70
	34	14.20	3.38	15.22	3.44	16.27	3.63	16.83	3.67	17.38	3.74	18.59	3.77	19.16	3.81	19.74	3.84
	35	14.10	3.45	15.13	3.51	16.18	3.70	16.75	3.74	17.30	3.81	18.50	3.85	19.08	3.89	19.65	3.92
	36	13.98	3.53	15.00	3.59	16.05	3.78	16.61	3.82	17.11	3.89	18.22	3.93	18.75	3.96	19.28	3.99
	38	13.74	3.68	14.75	3.76	15.80	3.94	16.33	3.99	16.73	4.04	17.65	4.10	18.09	4.11	18.53	4.13
	40	13.50	3.84	14.50	3.92	15.55	4.07	16.05	4.14	16.35	4.18	17.08	4.25	17.43	4.25	17.78	4.27
	43	12.51	4.08	13.56	4.18	14.61	4.31	15.00	4.39	14.93	4.41	14.94	4.54	14.95	4.49	14.96	4.50
	46	11.80	4.01	12.85	4.14	13.90	4.29	14.20	4.36	13.84	4.40	13.31	4.47	13.07	4.47	12.83	4.50
	48	11.33	3.18	12.38	3.29	13.43	3.40	13.67	3.46	13.12	3.48	12.23	3.53	11.82	3.53	11.40	3.56

11.2 Heating capacity tables according to total power of combined indoor units

NOTE

- *To: Inlet air temperature in the outdoor DB (°C)*
- *Ti: Inlet air temperature in the indoor WB (°C)*
- *CAP: Capacity at compressor maximum frequency (kW)*
- *IPT: Input power (kW)*

11.2.1 FS(V)NME

◆ **RAS-4FS(V)NME**

	To/ Ti	16		18		20		21		22		24	
		CAP	IPT	CAP	IPT	CAP	IPT	CAP	IPT	CAP	IPT	CAP	IPT
130%	-20	8.32	2.23	8.15	2.32	7.87	2.44	7.73	2.49	7.59	2.55	7.35	2.67
	-17	8.60	2.25	8.44	2.34	8.26	2.46	8.16	2.51	8.06	2.57	7.90	2.69
	-15	8.86	2.26	8.69	2.36	8.56	2.48	8.49	2.53	8.41	2.59	8.28	2.71
	-13	9.16	2.28	9.00	2.38	8.91	2.49	8.85	2.55	8.79	2.60	8.68	2.72
	-11	9.52	2.30	9.35	2.40	9.29	2.51	9.24	2.57	9.19	2.62	9.09	2.74
	-10	9.72	2.32	9.55	2.42	9.49	2.53	9.44	2.59	9.40	2.64	9.30	2.76
	-9	9.93	2.34	9.76	2.44	9.70	2.55	9.66	2.60	9.61	2.66	9.51	2.78
	-7	10.39	2.36	10.21	2.46	10.16	2.57	10.11	2.62	10.07	2.68	9.94	2.80
	-6	10.64	2.37	10.46	2.48	10.40	2.59	10.35	2.64	10.30	2.70	10.17	2.82
	-5	10.90	2.39	10.72	2.49	10.65	2.60	10.60	2.66	10.54	2.71	10.39	2.83
	-3	11.46	2.41	11.27	2.51	11.17	2.62	11.11	2.68	11.05	2.73	10.85	2.86
	-1	12.07	2.43	11.88	2.53	11.74	2.65	11.66	2.71	11.58	2.76	11.33	2.88
	0	12.40	2.46	12.20	2.55	12.03	2.67	11.94	2.72	11.85	2.78	11.57	2.90
	1	12.74	2.48	12.53	2.57	12.34	2.69	12.23	2.74	12.13	2.80	11.81	2.92
	3	13.45	2.49	13.23	2.59	12.97	2.71	12.84	2.76	12.71	2.82	12.32	2.94
	5	14.21	2.51	13.99	2.61	13.65	2.72	13.48	2.78	13.32	2.83	12.83	2.95
	6	14.62	2.53	14.38	2.63	14.00	2.74	13.82	2.80	13.63	2.85	13.09	2.97
	7	15.03	2.55	14.79	2.65	14.36	2.76	14.16	2.82	13.95	2.87	13.35	2.99
	9	15.90	2.57	15.65	2.67	15.11	2.78	14.86	2.83	14.61	2.89	13.89	3.01
	10	16.35	2.59	16.09	2.69	15.50	2.80	15.22	2.85	14.95	2.91	14.17	3.03
	11	16.81	2.60	16.55	2.71	15.89	2.82	15.59	2.87	15.29	2.93	14.45	3.05
	14	18.29	2.62	18.00	2.72	17.14	2.83	16.75	2.89	16.36	2.94	15.30	3.06
	15	18.80	2.64	18.51	2.74	17.57	2.86	17.15	2.91	16.73	2.96	15.59	3.09
120%	-20	8.32	2.30	8.15	2.39	7.87	2.52	7.73	2.57	7.59	2.63	7.35	2.75
	-17	8.60	2.32	8.44	2.41	8.26	2.53	8.16	2.59	8.06	2.65	7.90	2.77
	-15	8.86	2.34	8.69	2.43	8.56	2.55	8.49	2.61	8.41	2.67	8.28	2.79
	-13	9.16	2.35	9.00	2.46	8.91	2.57	8.85	2.63	8.79	2.69	8.68	2.81
	-11	9.52	2.37	9.35	2.48	9.29	2.59	9.24	2.65	9.19	2.71	9.09	2.83
	-10	9.72	2.39	9.55	2.50	9.49	2.61	9.44	2.67	9.40	2.72	9.30	2.85
	-9	9.93	2.41	9.76	2.52	9.70	2.63	9.66	2.69	9.61	2.74	9.51	2.87
	-7	10.39	2.43	10.21	2.53	10.16	2.65	10.11	2.71	10.07	2.76	9.94	2.89
	-6	10.64	2.45	10.46	2.55	10.40	2.67	10.35	2.72	10.30	2.78	10.17	2.91
	-5	10.90	2.47	10.72	2.57	10.65	2.69	10.60	2.74	10.54	2.80	10.39	2.92
	-3	11.46	2.49	11.27	2.59	11.17	2.71	11.11	2.76	11.05	2.82	10.85	2.95
	-1	12.07	2.51	11.88	2.61	11.74	2.73	11.66	2.79	11.58	2.85	11.33	2.97
	0	12.40	2.53	12.20	2.63	12.03	2.75	11.94	2.81	11.85	2.87	11.57	2.99
	1	12.74	2.55	12.53	2.65	12.34	2.77	12.23	2.83	12.13	2.89	11.81	3.01
	3	13.45	2.57	13.23	2.67	12.97	2.79	12.84	2.85	12.71	2.91	12.32	3.03
	5	14.21	2.59	13.99	2.70	13.65	2.81	13.48	2.87	13.32	2.92	12.83	3.05
	6	14.62	2.61	14.38	2.72	14.00	2.83	13.82	2.89	13.63	2.94	13.09	3.07
	7	15.03	2.63	14.79	2.73	14.36	2.85	14.16	2.91	13.95	2.96	13.35	3.09
	9	15.90	2.65	15.65	2.75	15.11	2.87	14.86	2.92	14.61	2.98	13.89	3.10
	10	16.35	2.67	16.09	2.77	15.50	2.89	15.22	2.94	14.95	3.00	14.17	3.12
	11	16.81	2.69	16.55	2.79	15.89	2.91	15.59	2.96	15.29	3.02	14.45	3.14
	14	18.29	2.71	18.00	2.81	17.14	2.92	16.75	2.98	16.36	3.04	15.30	3.16
	15	18.80	2.72	18.51	2.83	17.57	2.95	17.15	3.00	16.73	3.06	15.59	3.19

RAS-4FS(V)NME

	To/ Ti	16		18		20		21		22		24	
		CAP	IPT	CAP	IPT	CAP	IPT	CAP	IPT	CAP	IPT	CAP	IPT
110%	-20	8.32	2.34	8.15	2.44	7.87	2.57	7.73	2.63	7.59	2.68	7.35	2.81
	-17	8.60	2.36	8.44	2.46	8.26	2.59	8.16	2.64	8.06	2.70	7.90	2.83
	-15	8.86	2.38	8.69	2.48	8.56	2.61	8.49	2.66	8.41	2.72	8.28	2.85
	-13	9.16	2.40	9.00	2.51	8.91	2.63	8.85	2.68	8.79	2.74	8.68	2.87
	-11	9.52	2.42	9.35	2.53	9.29	2.64	9.24	2.70	9.19	2.76	9.09	2.89
	-10	9.72	2.44	9.55	2.55	9.49	2.66	9.44	2.72	9.40	2.78	9.30	2.91
	-9	9.93	2.46	9.76	2.57	9.70	2.68	9.66	2.74	9.61	2.80	9.51	2.93
	-7	10.39	2.48	10.21	2.59	10.16	2.70	10.11	2.76	10.07	2.82	9.94	2.94
	-6	10.64	2.50	10.46	2.61	10.40	2.72	10.35	2.78	10.30	2.84	10.17	2.96
	-5	10.90	2.52	10.72	2.63	10.65	2.74	10.60	2.80	10.54	2.86	10.39	2.98
	-3	11.46	2.54	11.27	2.64	11.17	2.76	11.11	2.82	11.05	2.88	10.85	3.01
	-1	12.07	2.56	11.88	2.66	11.74	2.79	11.66	2.85	11.58	2.91	11.33	3.03
	0	12.40	2.59	12.20	2.68	12.03	2.81	11.94	2.87	11.85	2.93	11.57	3.05
	1	12.74	2.61	12.53	2.70	12.34	2.83	12.23	2.89	12.13	2.94	11.81	3.07
	3	13.45	2.63	13.23	2.72	12.97	2.85	12.84	2.91	12.71	2.96	12.32	3.09
	5	14.21	2.64	13.99	2.75	13.65	2.87	13.48	2.93	13.32	2.98	12.83	3.11
	6	14.62	2.66	14.38	2.77	14.00	2.89	13.82	2.94	13.63	3.00	13.09	3.13
	7	15.03	2.68	14.79	2.79	14.36	2.91	14.16	2.96	13.95	3.02	13.35	3.15
	9	15.90	2.70	15.65	2.81	15.11	2.93	14.86	2.98	14.61	3.04	13.89	3.17
	10	16.35	2.72	16.09	2.83	15.50	2.94	15.22	3.00	14.95	3.06	14.17	3.19
	11	16.81	2.74	16.55	2.85	15.89	2.96	15.59	3.02	15.29	3.08	14.45	3.21
	14	18.29	2.76	18.00	2.87	17.14	2.98	16.75	3.04	16.36	3.10	15.30	3.23
	15	18.80	2.78	18.51	2.89	17.57	3.01	17.15	3.06	16.73	3.12	15.59	3.25
100%	-20	7.42	2.34	7.28	2.44	7.02	2.57	6.90	2.63	6.77	2.68	6.56	2.81
	-17	7.68	2.36	7.53	2.46	7.37	2.59	7.29	2.64	7.20	2.70	7.05	2.83
	-15	7.91	2.38	7.76	2.48	7.65	2.61	7.58	2.66	7.51	2.72	7.39	2.85
	-13	8.18	2.40	8.03	2.51	7.95	2.63	7.90	2.68	7.85	2.74	7.75	2.87
	-11	8.50	2.42	8.35	2.53	8.29	2.64	8.25	2.70	8.20	2.76	8.11	2.89
	-10	8.68	2.44	8.53	2.55	8.47	2.66	8.43	2.72	8.39	2.78	8.30	2.91
	-9	8.87	2.46	8.71	2.57	8.66	2.68	8.62	2.74	8.58	2.80	8.49	2.93
	-7	9.28	2.48	9.12	2.59	9.07	2.70	9.03	2.76	8.99	2.82	8.88	2.94
	-6	9.50	2.50	9.34	2.61	9.28	2.72	9.24	2.78	9.20	2.84	9.08	2.96
	-5	9.73	2.52	9.57	2.63	9.51	2.74	9.46	2.80	9.41	2.86	9.28	2.98
	-3	10.23	2.54	10.06	2.64	9.98	2.76	9.92	2.82	9.86	2.88	9.69	3.01
	-1	10.78	2.56	10.60	2.66	10.48	2.79	10.41	2.85	10.34	2.91	10.11	3.03
	0	11.07	2.59	10.89	2.68	10.74	2.81	10.66	2.87	10.58	2.93	10.33	3.05
	1	11.37	2.61	11.19	2.70	11.02	2.83	10.92	2.89	10.83	2.94	10.55	3.07
	3	12.01	2.63	11.82	2.72	11.58	2.85	11.47	2.91	11.35	2.96	11.00	3.09
	5	12.69	2.64	12.49	2.75	12.19	2.87	12.04	2.93	11.89	2.98	11.45	3.11
	6	13.05	2.66	12.84	2.77	12.50	2.89	12.34	2.94	12.17	3.00	11.69	3.13
	7	13.42	2.68	13.21	2.79	12.82	2.91	12.64	2.96	12.46	3.02	11.92	3.15
	9	14.19	2.70	13.97	2.81	13.49	2.93	13.27	2.98	13.04	3.04	12.41	3.17
	10	14.60	2.72	14.37	2.83	13.84	2.94	13.59	3.00	13.34	3.06	12.65	3.19
	11	15.01	2.74	14.78	2.85	14.19	2.96	13.92	3.02	13.65	3.08	12.90	3.21
	14	16.33	2.76	16.07	2.87	15.30	2.98	14.96	3.04	14.61	3.10	13.66	3.23
	15	16.79	2.78	16.53	2.89	15.69	3.01	15.32	3.06	14.94	3.12	13.92	3.25
90%	-20	7.48	2.04	7.33	2.12	7.08	2.23	6.95	2.28	6.83	2.33	6.61	2.44
	-17	7.74	2.06	7.59	2.14	7.43	2.25	7.34	2.30	7.26	2.35	7.11	2.46
	-15	7.97	2.07	7.82	2.16	7.71	2.27	7.64	2.32	7.57	2.37	7.45	2.48
	-13	8.25	2.09	8.10	2.18	8.02	2.28	7.96	2.33	7.91	2.39	7.81	2.49
	-11	8.57	2.11	8.42	2.20	8.36	2.30	8.31	2.35	8.27	2.40	8.18	2.51
	-10	8.75	2.12	8.59	2.22	8.54	2.32	8.50	2.37	8.46	2.42	8.37	2.53
	-9	8.94	2.14	8.78	2.23	8.73	2.33	8.69	2.39	8.65	2.44	8.56	2.55
	-7	9.35	2.16	9.19	2.25	9.14	2.35	9.10	2.40	9.06	2.45	8.95	2.56
	-6	9.57	2.17	9.41	2.27	9.36	2.37	9.31	2.42	9.27	2.47	9.15	2.58
	-5	9.81	2.19	9.64	2.28	9.58	2.39	9.54	2.44	9.49	2.49	9.35	2.60
	-3	10.31	2.21	10.14	2.30	10.06	2.40	10.00	2.45	9.94	2.50	9.77	2.62
	-1	10.87	2.22	10.69	2.32	10.56	2.43	10.49	2.48	10.42	2.53	10.19	2.64
	0	11.16	2.25	10.98	2.33	10.83	2.44	10.75	2.49	10.67	2.55	10.41	2.65
	1	11.46	2.27	11.28	2.35	11.10	2.46	11.01	2.51	10.92	2.56	10.63	2.67
	3	12.10	2.28	11.91	2.37	11.68	2.48	11.56	2.53	11.44	2.58	11.08	2.69
	5	12.79	2.30	12.59	2.39	12.28	2.49	12.14	2.55	11.99	2.60	11.55	2.71
	6	13.15	2.32	12.95	2.41	12.60	2.51	12.43	2.56	12.27	2.61	11.78	2.72
	7	13.53	2.33	13.31	2.43	12.92	2.53	12.74	2.58	12.56	2.63	12.02	2.74
	9	14.31	2.35	14.08	2.44	13.60	2.55	13.37	2.60	13.15	2.65	12.50	2.76
	10	14.71	2.37	14.48	2.46	13.95	2.56	13.70	2.61	13.45	2.66	12.75	2.77
	11	15.13	2.39	14.90	2.48	14.30	2.58	14.03	2.63	13.76	2.68	13.00	2.79
	14	16.46	2.40	16.20	2.49	15.42	2.60	15.08	2.65	14.73	2.70	13.77	2.81
	15	16.92	2.42	16.66	2.51	15.82	2.62	15.44	2.66	15.06	2.71	14.03	2.83

RAS-4FS(V)NME

	To/ Ti	16		18		20		21		22		24	
		CAP	IPT	CAP	IPT	CAP	IPT	CAP	IPT	CAP	IPT	CAP	IPT
80%	-20	6.65	1.81	6.52	1.88	6.29	1.98	6.18	2.02	6.07	2.07	5.88	2.16
	-17	6.88	1.82	6.75	1.89	6.61	1.99	6.53	2.04	6.45	2.08	6.32	2.18
	-15	7.09	1.83	6.95	1.91	6.85	2.01	6.79	2.05	6.73	2.10	6.63	2.19
	-13	7.33	1.85	7.20	1.93	7.13	2.02	7.08	2.07	7.03	2.11	6.94	2.21
	-11	7.62	1.86	7.48	1.95	7.43	2.04	7.39	2.08	7.35	2.13	7.27	2.22
	-10	7.78	1.88	7.64	1.96	7.59	2.05	7.55	2.10	7.52	2.14	7.44	2.24
	-9	7.94	1.89	7.81	1.98	7.76	2.07	7.73	2.11	7.69	2.16	7.61	2.25
	-7	8.31	1.91	8.17	1.99	8.12	2.08	8.09	2.13	8.05	2.17	7.96	2.27
	-6	8.51	1.92	8.37	2.01	8.32	2.10	8.28	2.14	8.24	2.19	8.13	2.28
	-5	8.72	1.94	8.57	2.02	8.52	2.11	8.48	2.16	8.44	2.20	8.31	2.30
	-3	9.17	1.95	9.02	2.04	8.94	2.13	8.89	2.17	8.84	2.22	8.68	2.32
	-1	9.66	1.97	9.50	2.05	9.39	2.15	9.33	2.19	9.26	2.24	9.06	2.33
	0	9.92	1.99	9.76	2.07	9.63	2.16	9.55	2.21	9.48	2.25	9.26	2.35
	1	10.19	2.01	10.02	2.08	9.87	2.18	9.79	2.22	9.71	2.27	9.45	2.36
	3	10.76	2.02	10.59	2.10	10.38	2.19	10.27	2.24	10.17	2.28	9.85	2.38
	5	11.37	2.04	11.19	2.12	10.92	2.21	10.79	2.25	10.65	2.30	10.26	2.39
	6	11.69	2.05	11.51	2.13	11.20	2.22	11.05	2.27	10.90	2.31	10.47	2.41
	7	12.02	2.07	11.83	2.15	11.49	2.24	11.32	2.28	11.16	2.33	10.68	2.42
	9	12.72	2.08	12.52	2.16	12.09	2.25	11.89	2.30	11.69	2.34	11.12	2.44
	10	13.08	2.10	12.87	2.18	12.40	2.27	12.18	2.31	11.96	2.36	11.33	2.45
	11	13.45	2.11	13.24	2.19	12.71	2.28	12.47	2.33	12.23	2.37	11.56	2.47
	14	14.63	2.13	14.40	2.21	13.71	2.30	13.40	2.34	13.09	2.39	12.24	2.48
	15	15.04	2.14	14.81	2.22	14.06	2.32	13.72	2.36	13.39	2.40	12.47	2.51
70%	-20	5.82	1.55	5.70	1.61	5.51	1.69	5.41	1.73	5.31	1.77	5.14	1.85
	-17	6.02	1.56	5.91	1.62	5.78	1.71	5.71	1.75	5.64	1.78	5.53	1.87
	-15	6.20	1.57	6.08	1.64	5.99	1.72	5.94	1.76	5.89	1.80	5.80	1.88
	-13	6.42	1.59	6.30	1.66	6.23	1.73	6.19	1.77	6.15	1.81	6.07	1.89
	-11	6.67	1.60	6.55	1.67	6.50	1.75	6.47	1.78	6.43	1.82	6.36	1.91
	-10	6.80	1.61	6.68	1.68	6.64	1.76	6.61	1.80	6.58	1.83	6.51	1.92
	-9	6.95	1.62	6.83	1.69	6.79	1.77	6.76	1.81	6.73	1.85	6.66	1.93
	-7	7.27	1.64	7.15	1.71	7.11	1.78	7.08	1.82	7.05	1.86	6.96	1.94
	-6	7.45	1.65	7.32	1.72	7.28	1.80	7.24	1.83	7.21	1.87	7.12	1.96
	-5	7.63	1.66	7.50	1.73	7.45	1.81	7.42	1.85	7.38	1.89	7.27	1.97
	-3	8.02	1.68	7.89	1.75	7.82	1.82	7.78	1.86	7.73	1.90	7.60	1.99
	-1	8.45	1.69	8.31	1.76	8.22	1.84	8.16	1.88	8.10	1.92	7.93	2.00
	0	8.68	1.71	8.54	1.77	8.42	1.85	8.36	1.89	8.30	1.93	8.10	2.01
	1	8.91	1.72	8.77	1.78	8.64	1.87	8.56	1.91	8.49	1.94	8.27	2.03
	3	9.41	1.73	9.26	1.80	9.08	1.88	8.99	1.92	8.90	1.96	8.62	2.04
	5	9.95	1.75	9.79	1.82	9.55	1.89	9.44	1.93	9.32	1.97	8.98	2.05
	6	10.23	1.76	10.07	1.83	9.80	1.91	9.67	1.94	9.54	1.98	9.16	2.07
	7	10.52	1.77	10.36	1.84	10.05	1.92	9.91	1.96	9.77	1.99	9.35	2.08
	9	11.13	1.78	10.95	1.85	10.58	1.93	10.40	1.97	10.23	2.01	9.73	2.09
	10	11.44	1.80	11.27	1.87	10.85	1.94	10.65	1.98	10.46	2.02	9.92	2.10
	11	11.77	1.81	11.59	1.88	11.12	1.96	10.91	1.99	10.70	2.03	10.11	2.12
	14	12.80	1.82	12.60	1.89	12.00	1.97	11.73	2.01	11.45	2.05	10.71	2.13
	15	13.16	1.83	12.96	1.91	12.30	1.99	12.01	2.02	11.71	2.06	10.91	2.15
60%	-20	4.99	1.34	4.89	1.39	4.72	1.46	4.64	1.50	4.55	1.53	4.41	1.60
	-17	5.16	1.35	5.06	1.40	4.95	1.47	4.90	1.51	4.84	1.54	4.74	1.61
	-15	5.32	1.36	5.22	1.41	5.14	1.49	5.09	1.52	5.05	1.55	4.97	1.62
	-13	5.50	1.37	5.40	1.43	5.34	1.50	5.31	1.53	5.27	1.56	5.21	1.63
	-11	5.71	1.38	5.61	1.44	5.57	1.51	5.54	1.54	5.51	1.57	5.45	1.65
	-10	5.83	1.39	5.73	1.45	5.69	1.52	5.67	1.55	5.64	1.58	5.58	1.66
	-9	5.96	1.40	5.85	1.46	5.82	1.53	5.80	1.56	5.77	1.60	5.71	1.67
	-7	6.23	1.41	6.13	1.47	6.09	1.54	6.07	1.57	6.04	1.61	5.97	1.68
	-6	6.38	1.42	6.27	1.49	6.24	1.55	6.21	1.58	6.18	1.62	6.10	1.69
	-5	6.54	1.44	6.43	1.50	6.39	1.56	6.36	1.60	6.33	1.63	6.24	1.70
	-3	6.88	1.45	6.76	1.51	6.70	1.57	6.67	1.61	6.63	1.64	6.51	1.72
	-1	7.24	1.46	7.13	1.52	7.04	1.59	6.99	1.62	6.95	1.66	6.80	1.73
	0	7.44	1.47	7.32	1.53	7.22	1.60	7.17	1.63	7.11	1.67	6.94	1.74
	1	7.64	1.49	7.52	1.54	7.40	1.61	7.34	1.65	7.28	1.68	7.09	1.75
	3	8.07	1.50	7.94	1.55	7.78	1.62	7.71	1.66	7.63	1.69	7.39	1.76
	5	8.53	1.51	8.39	1.57	8.19	1.63	8.09	1.67	7.99	1.70	7.70	1.77
	6	8.77	1.52	8.63	1.58	8.40	1.65	8.29	1.68	8.18	1.71	7.85	1.78
	7	9.02	1.53	8.88	1.59	8.62	1.66	8.49	1.69	8.37	1.72	8.01	1.79
	9	9.54	1.54	9.39	1.60	9.06	1.67	8.91	1.70	8.76	1.73	8.34	1.81
	10	9.81	1.55	9.66	1.61	9.30	1.68	9.13	1.71	8.97	1.74	8.50	1.82
	11	10.09	1.56	9.93	1.62	9.54	1.69	9.36	1.72	9.17	1.76	8.67	1.83
	14	10.97	1.57	10.80	1.63	10.28	1.70	10.05	1.73	9.82	1.77	9.18	1.84
	15	11.28	1.58	11.11	1.65	10.54	1.72	10.29	1.74	10.04	1.78	9.35	1.86

RAS-4FS(V)NME

	To/ Ti	16		18		20		21		22		24	
		CAP	IPT	CAP	IPT	CAP	IPT	CAP	IPT	CAP	IPT	CAP	IPT
50%	-20	4.16	1.10	4.07	1.15	3.93	1.21	3.86	1.23	3.79	1.26	3.67	1.32
	-17	4.30	1.11	4.22	1.16	4.13	1.22	4.08	1.24	4.03	1.27	3.95	1.33
	-15	4.43	1.12	4.35	1.17	4.28	1.22	4.24	1.25	4.21	1.28	4.14	1.34
	-13	4.58	1.13	4.50	1.18	4.45	1.23	4.42	1.26	4.39	1.29	4.34	1.35
	-11	4.76	1.14	4.68	1.19	4.64	1.24	4.62	1.27	4.59	1.30	4.54	1.36
	-10	4.86	1.15	4.77	1.20	4.74	1.25	4.72	1.28	4.70	1.31	4.65	1.37
	-9	4.97	1.16	4.88	1.21	4.85	1.26	4.83	1.29	4.81	1.32	4.75	1.38
	-7	5.19	1.17	5.11	1.22	5.08	1.27	5.06	1.30	5.03	1.32	4.97	1.38
	-6	5.32	1.17	5.23	1.22	5.20	1.28	5.17	1.31	5.15	1.33	5.08	1.39
	-5	5.45	1.18	5.36	1.23	5.32	1.29	5.30	1.32	5.27	1.34	5.20	1.40
	-3	5.73	1.19	5.64	1.24	5.59	1.30	5.56	1.32	5.52	1.35	5.43	1.42
	-1	6.04	1.20	5.94	1.25	5.87	1.31	5.83	1.34	5.79	1.37	5.66	1.43
	0	6.20	1.22	6.10	1.26	6.02	1.32	5.97	1.35	5.93	1.38	5.78	1.43
	1	6.37	1.22	6.26	1.27	6.17	1.33	6.12	1.36	6.07	1.38	5.91	1.44
	3	6.72	1.23	6.62	1.28	6.49	1.34	6.42	1.37	6.36	1.39	6.16	1.45
	5	7.11	1.24	6.99	1.29	6.82	1.35	6.74	1.38	6.66	1.40	6.41	1.46
	6	7.31	1.25	7.19	1.30	7.00	1.36	6.91	1.38	6.82	1.41	6.54	1.47
	7	7.51	1.26	7.40	1.31	7.18	1.37	7.08	1.39	6.98	1.42	6.68	1.48
	9	7.95	1.27	7.82	1.32	7.55	1.38	7.43	1.40	7.30	1.43	6.95	1.49
	10	8.17	1.28	8.05	1.33	7.75	1.38	7.61	1.41	7.47	1.44	7.08	1.50
	11	8.41	1.29	8.28	1.34	7.95	1.39	7.80	1.42	7.65	1.45	7.22	1.51
	14	9.14	1.30	9.00	1.35	8.57	1.40	8.38	1.43	8.18	1.46	7.65	1.52
	15	9.40	1.31	9.26	1.36	8.79	1.42	8.58	1.44	8.37	1.47	7.79	1.53

◆ RAS-5FS(V)NME

	To/ Ti	16		18		20		21		22		24	
		CAP	IPT	CAP	IPT	CAP	IPT	CAP	IPT	CAP	IPT	CAP	IPT
130%	-20	8.73	2.76	8.55	2.87	8.18	3.02	7.96	3.09	7.73	3.15	7.26	3.30
	-17	9.21	2.78	9.01	2.89	8.77	3.04	8.61	3.11	8.46	3.18	8.11	3.32
	-15	9.59	2.80	9.39	2.91	9.21	3.06	9.09	3.13	8.96	3.20	8.68	3.35
	-13	10.03	2.82	9.82	2.95	9.69	3.09	9.59	3.15	9.49	3.22	9.26	3.37
	-11	10.51	2.85	10.29	2.97	10.20	3.11	10.12	3.18	10.04	3.24	9.84	3.39
	-10	10.77	2.87	10.55	2.99	10.47	3.13	10.39	3.20	10.32	3.27	10.13	3.42
	-9	11.05	2.89	10.82	3.02	10.74	3.15	10.68	3.22	10.61	3.29	10.42	3.44
	-7	11.64	2.91	11.41	3.04	11.33	3.18	11.27	3.24	11.21	3.31	11.01	3.46
	-6	11.95	2.94	11.72	3.06	11.63	3.20	11.57	3.27	11.51	3.34	11.31	3.48
	-5	12.28	2.96	12.04	3.09	11.95	3.22	11.88	3.29	11.82	3.36	11.61	3.51
	-3	12.96	2.98	12.72	3.11	12.60	3.24	12.53	3.31	12.46	3.38	12.21	3.54
	-1	13.71	3.01	13.46	3.13	13.30	3.28	13.20	3.35	13.11	3.42	12.81	3.56
	0	14.09	3.04	13.85	3.15	13.65	3.30	13.55	3.37	13.45	3.44	13.12	3.59
	1	14.50	3.06	14.25	3.18	14.02	3.32	13.91	3.39	13.79	3.46	13.43	3.61
	3	15.34	3.09	15.09	3.20	14.79	3.35	14.64	3.42	14.49	3.48	14.04	3.63
	5	16.23	3.11	15.98	3.23	15.59	3.37	15.40	3.44	15.22	3.51	14.66	3.65
	6	16.70	3.13	16.44	3.26	16.00	3.39	15.79	3.46	15.59	3.53	14.97	3.68
	7	17.18	3.15	16.92	3.28	16.42	3.42	16.19	3.48	15.96	3.55	15.29	3.70
	9	18.17	3.18	17.91	3.30	17.29	3.44	17.01	3.51	16.73	3.58	15.92	3.72
	10	18.69	3.20	18.43	3.32	17.74	3.46	17.43	3.53	17.12	3.60	16.23	3.75
	11	19.22	3.22	18.96	3.35	18.20	3.48	17.86	3.55	17.51	3.62	16.55	3.77
	14	20.88	3.24	20.62	3.37	19.63	3.51	19.18	3.58	18.73	3.64	17.52	3.79
	15	21.46	3.27	21.20	3.39	20.13	3.54	19.64	3.60	19.15	3.67	17.84	3.83
120%	-20	8.73	2.84	8.55	2.96	8.18	3.11	7.96	3.18	7.73	3.25	7.26	3.41
	-17	9.21	2.87	9.01	2.98	8.77	3.14	8.61	3.21	8.46	3.28	8.11	3.43
	-15	9.59	2.89	9.39	3.01	9.21	3.16	9.09	3.23	8.96	3.30	8.68	3.45
	-13	10.03	2.91	9.82	3.04	9.69	3.18	9.59	3.25	9.49	3.32	9.26	3.48
	-11	10.51	2.94	10.29	3.07	10.20	3.21	10.12	3.28	10.04	3.35	9.84	3.50
	-10	10.77	2.96	10.55	3.09	10.47	3.23	10.39	3.30	10.32	3.37	10.13	3.52
	-9	11.05	2.98	10.82	3.11	10.74	3.25	10.68	3.32	10.61	3.39	10.42	3.55
	-7	11.64	3.01	11.41	3.14	11.33	3.28	11.27	3.35	11.21	3.42	11.01	3.57
	-6	11.95	3.03	11.72	3.16	11.63	3.30	11.57	3.37	11.51	3.44	11.31	3.59
	-5	12.28	3.05	12.04	3.18	11.95	3.32	11.88	3.39	11.82	3.46	11.61	3.62
	-3	12.96	3.08	12.72	3.21	12.60	3.35	12.53	3.42	12.46	3.49	12.21	3.65
	-1	13.71	3.10	13.46	3.23	13.30	3.38	13.20	3.45	13.11	3.52	12.81	3.68
	0	14.09	3.14	13.85	3.25	13.65	3.41	13.55	3.48	13.45	3.55	13.12	3.70
	1	14.50	3.16	14.25	3.28	14.02	3.43	13.91	3.50	13.79	3.57	13.43	3.72
	3	15.34	3.18	15.09	3.30	14.79	3.45	14.64	3.52	14.49	3.59	14.04	3.75
	5	16.23	3.21	15.98	3.34	15.59	3.48	15.40	3.55	15.22	3.62	14.66	3.77
	6	16.70	3.23	16.44	3.36	16.00	3.50	15.79	3.57	15.59	3.64	14.97	3.79
	7	17.18	3.25	16.92	3.38	16.42	3.52	16.19	3.59	15.96	3.66	15.29	3.82
	9	18.17	3.28	17.91	3.41	17.29	3.55	17.01	3.62	16.73	3.69	15.92	3.84
	10	18.69	3.30	18.43	3.43	17.74	3.57	17.43	3.64	17.12	3.71	16.23	3.86
	11	19.22	3.32	18.96	3.45	18.20	3.59	17.86	3.66	17.51	3.73	16.55	3.89
	14	20.88	3.35	20.62	3.48	19.63	3.62	19.18	3.69	18.73	3.76	17.52	3.91
	15	21.46	3.37	21.20	3.50	20.13	3.65	19.64	3.71	19.15	3.78	17.84	3.95
110%	-20	8.73	2.90	8.55	3.02	8.18	3.18	7.96	3.25	7.73	3.32	7.26	3.48
	-17	9.21	2.92	9.01	3.04	8.77	3.20	8.61	3.27	8.46	3.34	8.11	3.50
	-15	9.59	2.95	9.39	3.07	9.21	3.22	9.09	3.30	8.96	3.37	8.68	3.52
	-13	10.03	2.97	9.82	3.10	9.69	3.25	9.59	3.32	9.49	3.39	9.26	3.55
	-11	10.51	3.00	10.29	3.13	10.20	3.27	10.12	3.34	10.04	3.42	9.84	3.57
	-10	10.77	3.02	10.55	3.15	10.47	3.30	10.39	3.37	10.32	3.44	10.13	3.60
	-9	11.05	3.04	10.82	3.18	10.74	3.32	10.68	3.39	10.61	3.46	10.42	3.62
	-7	11.64	3.07	11.41	3.20	11.33	3.34	11.27	3.42	11.21	3.49	11.01	3.64
	-6	11.95	3.09	11.72	3.22	11.63	3.37	11.57	3.44	11.51	3.51	11.31	3.67
	-5	12.28	3.12	12.04	3.25	11.95	3.39	11.88	3.46	11.82	3.54	11.61	3.69
	-3	12.96	3.14	12.72	3.27	12.60	3.42	12.53	3.49	12.46	3.56	12.21	3.73
	-1	13.71	3.16	13.46	3.30	13.30	3.45	13.20	3.52	13.11	3.60	12.81	3.75
	0	14.09	3.20	13.85	3.32	13.65	3.48	13.55	3.55	13.45	3.62	13.12	3.78
	1	14.50	3.22	14.25	3.34	14.02	3.50	13.91	3.57	13.79	3.64	13.43	3.80
	3	15.34	3.25	15.09	3.37	14.79	3.52	14.64	3.60	14.49	3.67	14.04	3.82
	5	16.23	3.27	15.98	3.40	15.59	3.55	15.40	3.62	15.22	3.69	14.66	3.85
	6	16.70	3.30	16.44	3.43	16.00	3.57	15.79	3.64	15.59	3.72	14.97	3.87
	7	17.18	3.32	16.92	3.45	16.42	3.60	16.19	3.67	15.96	3.74	15.29	3.90
	9	18.17	3.34	17.91	3.48	17.29	3.62	17.01	3.69	16.73	3.76	15.92	3.92
	10	18.69	3.37	18.43	3.50	17.74	3.64	17.43	3.72	17.12	3.79	16.23	3.94
	11	19.22	3.39	18.96	3.52	18.20	3.67	17.86	3.74	17.51	3.81	16.55	3.97
	14	20.88	3.42	20.62	3.55	19.63	3.69	19.18	3.76	18.73	3.84	17.52	3.99
	15	21.46	3.44	21.20	3.57	20.13	3.73	19.64	3.79	19.15	3.86	17.84	4.03

RAS-5FS(V)NME

	To/ Ti	16		18		20		21		22		24	
		CAP	IPT	CAP	IPT	CAP	IPT	CAP	IPT	CAP	IPT	CAP	IPT
100%	-20	8.73	2.90	8.55	3.02	8.18	3.18	7.96	3.25	7.73	3.32	7.26	3.48
	-17	9.21	2.92	9.01	3.04	8.77	3.20	8.61	3.27	8.46	3.34	8.11	3.50
	-15	9.59	2.95	9.39	3.07	9.21	3.22	9.09	3.30	8.96	3.37	8.68	3.52
	-13	10.03	2.97	9.82	3.10	9.69	3.25	9.59	3.32	9.49	3.39	9.26	3.55
	-11	10.51	3.00	10.29	3.13	10.20	3.27	10.12	3.34	10.04	3.42	9.84	3.57
	-10	10.77	3.02	10.55	3.15	10.47	3.30	10.39	3.37	10.32	3.44	10.13	3.60
	-9	11.05	3.04	10.82	3.18	10.74	3.32	10.68	3.39	10.61	3.46	10.42	3.62
	-7	11.64	3.07	11.41	3.20	11.33	3.34	11.27	3.42	11.21	3.49	11.01	3.64
	-6	11.95	3.09	11.72	3.22	11.63	3.37	11.57	3.44	11.51	3.51	11.31	3.67
	-5	12.28	3.12	12.04	3.25	11.95	3.39	11.88	3.46	11.82	3.54	11.61	3.69
	-3	12.96	3.14	12.72	3.27	12.60	3.42	12.53	3.49	12.46	3.56	12.21	3.73
	-1	13.71	3.16	13.46	3.30	13.30	3.45	13.20	3.52	13.11	3.60	12.81	3.75
	0	14.09	3.20	13.85	3.32	13.65	3.48	13.55	3.55	13.45	3.62	13.12	3.78
	1	14.50	3.22	14.25	3.34	14.02	3.50	13.91	3.57	13.79	3.64	13.43	3.80
	3	15.34	3.25	15.09	3.37	14.79	3.52	14.64	3.60	14.49	3.67	14.04	3.82
	5	16.23	3.27	15.98	3.40	15.59	3.55	15.40	3.62	15.22	3.69	14.66	3.85
	6	16.70	3.30	16.44	3.43	16.00	3.57	15.79	3.64	15.59	3.72	14.97	3.87
	7	17.18	3.32	16.92	3.45	16.42	3.60	16.19	3.67	15.96	3.74	15.29	3.90
	9	18.17	3.34	17.91	3.48	17.29	3.62	17.01	3.69	16.73	3.76	15.92	3.92
	10	18.69	3.37	18.43	3.50	17.74	3.64	17.43	3.72	17.12	3.79	16.23	3.94
	11	19.22	3.39	18.96	3.52	18.20	3.67	17.86	3.74	17.51	3.81	16.55	3.97
	14	20.88	3.42	20.62	3.55	19.63	3.69	19.18	3.76	18.73	3.84	17.52	3.99
	15	21.46	3.44	21.20	3.57	20.13	3.73	19.64	3.79	19.15	3.86	17.84	4.03
90%	-20	7.86	2.52	7.69	2.63	7.36	2.76	7.16	2.83	6.96	2.89	6.54	3.02
	-17	8.29	2.54	8.11	2.65	7.89	2.78	7.75	2.85	7.61	2.91	7.30	3.04
	-15	8.63	2.56	8.45	2.67	8.29	2.80	8.18	2.87	8.07	2.93	7.81	3.07
	-13	9.02	2.59	8.83	2.70	8.72	2.83	8.63	2.89	8.54	2.95	8.33	3.09
	-11	9.46	2.61	9.26	2.72	9.18	2.85	9.11	2.91	9.04	2.97	8.85	3.11
	-10	9.70	2.63	9.50	2.74	9.42	2.87	9.36	2.93	9.29	2.99	9.12	3.13
	-9	9.94	2.65	9.74	2.76	9.67	2.89	9.61	2.95	9.55	3.01	9.38	3.15
	-7	10.47	2.67	10.27	2.78	10.20	2.91	10.14	2.97	10.08	3.03	9.91	3.17
	-6	10.75	2.69	10.54	2.80	10.47	2.93	10.41	2.99	10.36	3.06	10.18	3.19
	-5	11.05	2.71	10.83	2.83	10.75	2.95	10.70	3.01	10.64	3.08	10.45	3.21
	-3	11.67	2.73	11.45	2.85	11.34	2.97	11.28	3.03	11.21	3.10	10.99	3.24
	-1	12.33	2.75	12.11	2.87	11.97	3.00	11.88	3.07	11.80	3.13	11.53	3.26
	0	12.69	2.78	12.46	2.89	12.29	3.02	12.20	3.09	12.11	3.15	11.81	3.28
	1	13.05	2.80	12.82	2.91	12.62	3.04	12.52	3.11	12.41	3.17	12.08	3.31
	3	13.80	2.83	13.58	2.93	13.31	3.07	13.18	3.13	13.04	3.19	12.64	3.33
	5	14.61	2.85	14.38	2.96	14.03	3.09	13.86	3.15	13.69	3.21	13.20	3.35
	6	15.03	2.87	14.80	2.98	14.40	3.11	14.21	3.17	14.03	3.23	13.48	3.37
	7	15.46	2.89	15.23	3.00	14.78	3.13	14.57	3.19	14.36	3.25	13.76	3.39
	9	16.35	2.91	16.12	3.02	15.56	3.15	15.31	3.21	15.05	3.27	14.33	3.41
	10	16.82	2.93	16.59	3.04	15.97	3.17	15.69	3.23	15.40	3.29	14.61	3.43
	11	17.30	2.95	17.06	3.07	16.38	3.19	16.07	3.25	15.76	3.32	14.90	3.45
	14	18.79	2.97	18.56	3.09	17.67	3.21	17.26	3.27	16.86	3.34	15.76	3.47
	15	19.32	2.99	19.08	3.11	18.11	3.24	17.67	3.29	17.24	3.36	16.05	3.50
80%	-20	6.98	2.23	6.84	2.33	6.54	2.45	6.37	2.50	6.19	2.56	5.81	2.68
	-17	7.37	2.25	7.21	2.34	7.02	2.46	6.89	2.52	6.76	2.57	6.49	2.69
	-15	7.67	2.27	7.51	2.36	7.37	2.48	7.27	2.54	7.17	2.59	6.94	2.71
	-13	8.02	2.29	7.85	2.39	7.75	2.50	7.67	2.56	7.59	2.61	7.40	2.73
	-11	8.41	2.31	8.24	2.41	8.16	2.52	8.09	2.57	8.03	2.63	7.87	2.75
	-10	8.62	2.33	8.44	2.43	8.37	2.54	8.32	2.59	8.26	2.65	8.10	2.77
	-9	8.84	2.34	8.66	2.45	8.60	2.56	8.54	2.61	8.49	2.67	8.34	2.79
	-7	9.31	2.36	9.12	2.46	9.06	2.57	9.01	2.63	8.96	2.69	8.81	2.81
	-6	9.56	2.38	9.37	2.48	9.31	2.59	9.26	2.65	9.21	2.70	9.05	2.82
	-5	9.82	2.40	9.63	2.50	9.56	2.61	9.51	2.67	9.46	2.72	9.29	2.84
	-3	10.37	2.42	10.18	2.52	10.08	2.63	10.02	2.69	9.96	2.74	9.77	2.87
	-1	10.96	2.44	10.77	2.54	10.64	2.66	10.56	2.71	10.49	2.77	10.25	2.89
	0	11.28	2.46	11.08	2.56	10.92	2.68	10.84	2.73	10.76	2.79	10.50	2.91
	1	11.60	2.48	11.40	2.57	11.22	2.69	11.13	2.75	11.03	2.81	10.74	2.93
	3	12.27	2.50	12.07	2.59	11.83	2.71	11.71	2.77	11.59	2.82	11.23	2.94
	5	12.99	2.52	12.78	2.62	12.47	2.73	12.32	2.79	12.17	2.84	11.73	2.96
	6	13.36	2.54	13.15	2.64	12.80	2.75	12.63	2.81	12.47	2.86	11.98	2.98
	7	13.74	2.56	13.54	2.66	13.14	2.77	12.95	2.82	12.77	2.88	12.23	3.00
	9	14.54	2.57	14.33	2.68	13.84	2.79	13.61	2.84	13.38	2.90	12.73	3.02
	10	14.95	2.59	14.74	2.69	14.19	2.81	13.94	2.86	13.69	2.92	12.99	3.04
	11	15.37	2.61	15.17	2.71	14.56	2.82	14.29	2.88	14.01	2.93	13.24	3.05
	14	16.71	2.63	16.50	2.73	15.71	2.84	15.35	2.90	14.99	2.95	14.01	3.07
	15	17.17	2.65	16.96	2.75	16.10	2.87	15.71	2.92	15.32	2.97	14.27	3.10

RAS-5FS(V)NME

	To/ Ti	16		18		20		21		22		24	
		CAP	IPT	CAP	IPT	CAP	IPT	CAP	IPT	CAP	IPT	CAP	IPT
70%	-20	6.11	1.91	5.98	1.99	5.72	2.10	5.57	2.14	5.41	2.19	5.08	2.29
	-17	6.45	1.93	6.31	2.01	6.14	2.11	6.03	2.16	5.92	2.21	5.68	2.31
	-15	6.71	1.95	6.57	2.02	6.45	2.13	6.36	2.18	6.27	2.22	6.08	2.33
	-13	7.02	1.96	6.87	2.05	6.78	2.14	6.71	2.19	6.64	2.24	6.48	2.34
	-11	7.36	1.98	7.21	2.06	7.14	2.16	7.08	2.21	7.03	2.25	6.89	2.36
	-10	7.54	1.99	7.39	2.08	7.33	2.18	7.28	2.22	7.23	2.27	7.09	2.37
	-9	7.73	2.01	7.58	2.10	7.52	2.19	7.47	2.24	7.43	2.29	7.30	2.39
	-7	8.15	2.02	7.98	2.11	7.93	2.21	7.89	2.25	7.84	2.30	7.71	2.40
	-6	8.36	2.04	8.20	2.13	8.14	2.22	8.10	2.27	8.06	2.32	7.92	2.42
	-5	8.59	2.06	8.43	2.14	8.36	2.24	8.32	2.29	8.27	2.33	8.13	2.44
	-3	9.08	2.07	8.91	2.16	8.82	2.25	8.77	2.30	8.72	2.35	8.55	2.46
	-1	9.59	2.09	9.42	2.18	9.31	2.28	9.24	2.33	9.18	2.37	8.97	2.48
	0	9.87	2.11	9.69	2.19	9.56	2.29	9.49	2.34	9.42	2.39	9.18	2.49
	1	10.15	2.13	9.97	2.21	9.82	2.31	9.74	2.36	9.66	2.40	9.40	2.51
	3	10.74	2.14	10.56	2.22	10.35	2.33	10.25	2.37	10.15	2.42	9.83	2.52
	5	11.36	2.16	11.18	2.25	10.91	2.34	10.78	2.39	10.65	2.44	10.26	2.54
	6	11.69	2.18	11.51	2.26	11.20	2.36	11.05	2.40	10.91	2.45	10.48	2.55
	7	12.02	2.19	11.84	2.28	11.50	2.37	11.33	2.42	11.17	2.47	10.70	2.57
	9	12.72	2.21	12.54	2.29	12.11	2.39	11.91	2.44	11.71	2.48	11.14	2.59
	10	13.08	2.22	12.90	2.31	12.42	2.40	12.20	2.45	11.98	2.50	11.36	2.60
	11	13.45	2.24	13.27	2.33	12.74	2.42	12.50	2.47	12.26	2.52	11.59	2.62
	14	14.62	2.25	14.44	2.34	13.74	2.44	13.43	2.48	13.11	2.53	12.26	2.63
	15	15.02	2.27	14.84	2.36	14.09	2.46	13.75	2.50	13.41	2.55	12.49	2.66
60%	-20	5.24	1.65	5.13	1.72	4.91	1.81	4.77	1.85	4.64	1.89	4.36	1.98
	-17	5.53	1.67	5.41	1.74	5.26	1.82	5.17	1.86	5.07	1.91	4.87	1.99
	-15	5.76	1.68	5.63	1.75	5.53	1.84	5.45	1.88	5.38	1.92	5.21	2.01
	-13	6.02	1.69	5.89	1.77	5.81	1.85	5.75	1.89	5.69	1.93	5.55	2.02
	-11	6.31	1.71	6.18	1.78	6.12	1.86	6.07	1.91	6.02	1.95	5.90	2.04
	-10	6.46	1.72	6.33	1.80	6.28	1.88	6.24	1.92	6.19	1.96	6.08	2.05
	-9	6.63	1.74	6.49	1.81	6.45	1.89	6.41	1.93	6.37	1.97	6.25	2.06
	-7	6.98	1.75	6.84	1.82	6.80	1.91	6.76	1.95	6.72	1.99	6.61	2.08
	-6	7.17	1.76	7.03	1.84	6.98	1.92	6.94	1.96	6.91	2.00	6.79	2.09
	-5	7.37	1.78	7.22	1.85	7.17	1.93	7.13	1.97	7.09	2.02	6.96	2.10
	-3	7.78	1.79	7.63	1.86	7.56	1.95	7.52	1.99	7.47	2.03	7.33	2.12
	-1	8.22	1.80	8.08	1.88	7.98	1.97	7.92	2.01	7.87	2.05	7.69	2.14
	0	8.46	1.82	8.31	1.89	8.19	1.98	8.13	2.02	8.07	2.06	7.87	2.15
	1	8.70	1.84	8.55	1.91	8.41	1.99	8.34	2.04	8.28	2.08	8.06	2.17
	3	9.20	1.85	9.05	1.92	8.87	2.01	8.78	2.05	8.70	2.09	8.42	2.18
	5	9.74	1.86	9.59	1.94	9.35	2.02	9.24	2.06	9.13	2.10	8.80	2.19
	6	10.02	1.88	9.86	1.95	9.60	2.04	9.48	2.08	9.35	2.12	8.98	2.21
	7	10.31	1.89	10.15	1.97	9.85	2.05	9.71	2.09	9.58	2.13	9.17	2.22
	9	10.90	1.91	10.75	1.98	10.38	2.06	10.21	2.10	10.04	2.15	9.55	2.23
	10	11.21	1.92	11.06	1.99	10.65	2.08	10.46	2.12	10.27	2.16	9.74	2.25
	11	11.53	1.93	11.38	2.01	10.92	2.09	10.71	2.13	10.51	2.17	9.93	2.26
	14	12.53	1.95	12.37	2.02	11.78	2.10	11.51	2.15	11.24	2.19	10.51	2.27
	15	12.88	1.96	12.72	2.04	12.08	2.12	11.78	2.16	11.49	2.20	10.70	2.30
50%	-20	4.36	1.36	4.27	1.42	4.09	1.49	3.98	1.53	3.87	1.56	3.63	1.63
	-17	4.60	1.37	4.51	1.43	4.38	1.50	4.31	1.54	4.23	1.57	4.05	1.64
	-15	4.80	1.39	4.69	1.44	4.60	1.52	4.54	1.55	4.48	1.58	4.34	1.66
	-13	5.01	1.40	4.91	1.46	4.84	1.53	4.79	1.56	4.75	1.59	4.63	1.67
	-11	5.26	1.41	5.15	1.47	5.10	1.54	5.06	1.57	5.02	1.61	4.92	1.68
	-10	5.39	1.42	5.28	1.48	5.23	1.55	5.20	1.58	5.16	1.62	5.06	1.69
	-9	5.52	1.43	5.41	1.49	5.37	1.56	5.34	1.59	5.31	1.63	5.21	1.70
	-7	5.82	1.44	5.70	1.50	5.66	1.57	5.63	1.61	5.60	1.64	5.51	1.71
	-6	5.97	1.45	5.86	1.52	5.82	1.58	5.79	1.62	5.75	1.65	5.65	1.72
	-5	6.14	1.46	6.02	1.53	5.97	1.59	5.94	1.63	5.91	1.66	5.80	1.73
	-3	6.48	1.48	6.36	1.54	6.30	1.61	6.26	1.64	6.23	1.67	6.10	1.75
	-1	6.85	1.49	6.73	1.55	6.65	1.62	6.60	1.66	6.56	1.69	6.41	1.76
	0	7.05	1.50	6.92	1.56	6.83	1.63	6.78	1.67	6.73	1.70	6.56	1.77
	1	7.25	1.52	7.12	1.57	7.01	1.64	6.95	1.68	6.90	1.71	6.71	1.79
	3	7.67	1.53	7.54	1.58	7.39	1.66	7.32	1.69	7.25	1.72	7.02	1.80
	5	8.12	1.54	7.99	1.60	7.79	1.67	7.70	1.70	7.61	1.73	7.33	1.81
	6	8.35	1.55	8.22	1.61	8.00	1.68	7.90	1.71	7.79	1.75	7.49	1.82
	7	8.59	1.56	8.46	1.62	8.21	1.69	8.10	1.72	7.98	1.76	7.64	1.83
	9	9.09	1.57	8.96	1.63	8.65	1.70	8.50	1.73	8.36	1.77	7.96	1.84
	10	9.34	1.58	9.21	1.64	8.87	1.71	8.71	1.75	8.56	1.78	8.12	1.85
	11	9.61	1.59	9.48	1.66	9.10	1.72	8.93	1.76	8.76	1.79	8.28	1.86
	14	10.44	1.61	10.31	1.67	9.82	1.73	9.59	1.77	9.37	1.80	8.76	1.88
	15	10.73	1.62	10.60	1.68	10.06	1.75	9.82	1.78	9.58	1.81	8.92	1.89

◆ RAS-6FS(V)NME

	To/ Ti	16		18		20		21		22		24	
		CAP	IPT	CAP	IPT	CAP	IPT	CAP	IPT	CAP	IPT	CAP	IPT
130%	-20	11.10	3.31	10.36	3.45	9.62	3.63	9.41	3.71	9.19	3.79	8.63	3.97
	-17	11.35	3.34	10.74	3.48	10.12	3.66	9.93	3.74	9.73	3.82	9.22	4.00
	-15	11.61	3.37	11.07	3.51	10.52	3.68	10.34	3.77	10.15	3.85	9.68	4.03
	-13	11.93	3.40	11.46	3.55	10.98	3.71	10.80	3.79	10.63	3.88	10.18	4.05
	-11	12.32	3.42	11.91	3.57	11.49	3.74	11.32	3.82	11.15	3.90	10.73	4.08
	-10	12.54	3.45	12.16	3.60	11.77	3.77	11.60	3.85	11.43	3.93	11.03	4.11
	-9	12.78	3.48	12.42	3.63	12.05	3.79	11.89	3.88	11.73	3.96	11.33	4.14
	-7	13.31	3.51	12.99	3.66	12.67	3.82	12.51	3.90	12.35	3.99	11.98	4.16
	-6	13.60	3.53	13.30	3.68	13.00	3.85	12.84	3.93	12.69	4.01	12.32	4.19
	-5	13.91	3.56	13.62	3.71	13.34	3.88	13.19	3.96	13.03	4.04	12.68	4.22
	-3	14.57	3.59	14.32	3.74	14.07	3.90	13.92	3.99	13.76	4.07	13.42	4.26
	-1	15.30	3.62	15.07	3.77	14.85	3.94	14.70	4.03	14.54	4.11	14.21	4.29
	0	15.69	3.66	15.47	3.79	15.26	3.97	15.11	4.05	14.95	4.14	14.63	4.31
	1	16.10	3.68	15.89	3.82	15.68	4.00	15.53	4.08	15.38	4.16	15.05	4.34
	3	16.97	3.71	16.77	3.85	16.57	4.03	16.41	4.11	16.26	4.19	15.94	4.37
	5	17.90	3.74	17.71	3.89	17.51	4.05	17.35	4.14	17.20	4.22	16.88	4.40
	6	18.40	3.77	18.20	3.92	18.00	4.08	17.84	4.16	17.68	4.25	17.36	4.42
	7	18.91	3.79	18.71	3.94	18.50	4.11	18.34	4.19	18.18	4.27	17.86	4.45
	9	19.98	3.82	19.77	3.97	19.55	4.14	19.39	4.22	19.22	4.30	18.89	4.48
	10	20.54	3.85	20.32	4.00	20.10	4.16	19.93	4.25	19.76	4.33	19.43	4.51
	11	21.12	3.88	20.89	4.03	20.66	4.19	20.48	4.27	20.31	4.36	19.97	4.53
	14	22.95	3.90	22.68	4.05	22.41	4.22	22.22	4.30	22.04	4.38	21.68	4.56
	15	23.60	3.93	23.31	4.08	23.02	4.26	22.83	4.33	22.64	4.41	22.28	4.60
120%	-20	11.10	3.42	10.36	3.56	9.62	3.74	9.41	3.83	9.19	3.91	8.63	4.10
	-17	11.35	3.45	10.74	3.59	10.12	3.77	9.93	3.86	9.73	3.94	9.22	4.13
	-15	11.61	3.48	11.07	3.62	10.52	3.80	10.34	3.89	10.15	3.97	9.68	4.15
	-13	11.93	3.50	11.46	3.66	10.98	3.83	10.80	3.91	10.63	4.00	10.18	4.18
	-11	12.32	3.53	11.91	3.69	11.49	3.86	11.32	3.94	11.15	4.03	10.73	4.21
	-10	12.54	3.56	12.16	3.72	11.77	3.89	11.60	3.97	11.43	4.05	11.03	4.24
	-9	12.78	3.59	12.42	3.74	12.05	3.91	11.89	4.00	11.73	4.08	11.33	4.27
	-7	13.31	3.62	12.99	3.77	12.67	3.94	12.51	4.03	12.35	4.11	11.98	4.29
	-6	13.60	3.64	13.30	3.80	13.00	3.97	12.84	4.05	12.69	4.14	12.32	4.32
	-5	13.91	3.67	13.62	3.83	13.34	4.00	13.19	4.08	13.03	4.17	12.68	4.35
	-3	14.57	3.70	14.32	3.86	14.07	4.03	13.92	4.11	13.76	4.20	13.42	4.39
	-1	15.30	3.73	15.07	3.89	14.85	4.07	14.70	4.15	14.54	4.24	14.21	4.42
	0	15.69	3.77	15.47	3.91	15.26	4.10	15.11	4.18	14.95	4.27	14.63	4.45
	1	16.10	3.80	15.89	3.94	15.68	4.13	15.53	4.21	15.38	4.29	15.05	4.48
	3	16.97	3.83	16.77	3.97	16.57	4.15	16.41	4.24	16.26	4.32	15.94	4.51
	5	17.90	3.86	17.71	4.01	17.51	4.18	17.35	4.27	17.20	4.35	16.88	4.53
	6	18.40	3.89	18.20	4.04	18.00	4.21	17.84	4.29	17.68	4.38	17.36	4.56
	7	18.91	3.91	18.71	4.07	18.50	4.24	18.34	4.32	18.18	4.41	17.86	4.59
	9	19.98	3.94	19.77	4.10	19.55	4.27	19.39	4.35	19.22	4.44	18.89	4.62
	10	20.54	3.97	20.32	4.13	20.10	4.29	19.93	4.38	19.76	4.46	19.43	4.65
	11	21.12	4.00	20.89	4.15	20.66	4.32	20.48	4.41	20.31	4.49	19.97	4.68
	14	22.95	4.03	22.68	4.18	22.41	4.35	22.22	4.44	22.04	4.52	21.68	4.70
	15	23.60	4.05	23.31	4.21	23.02	4.39	22.83	4.46	22.64	4.55	22.28	4.75
110%	-20	11.10	3.49	10.36	3.63	9.62	3.82	9.41	3.91	9.19	3.99	8.63	4.18
	-17	11.35	3.52	10.74	3.66	10.12	3.85	9.93	3.94	9.73	4.02	9.22	4.21
	-15	11.61	3.55	11.07	3.69	10.52	3.88	10.34	3.96	10.15	4.05	9.68	4.24
	-13	11.93	3.58	11.46	3.73	10.98	3.91	10.80	3.99	10.63	4.08	10.18	4.27
	-11	12.32	3.60	11.91	3.76	11.49	3.94	11.32	4.02	11.15	4.11	10.73	4.30
	-10	12.54	3.63	12.16	3.79	11.77	3.96	11.60	4.05	11.43	4.14	11.03	4.32
	-9	12.78	3.66	12.42	3.82	12.05	3.99	11.89	4.08	11.73	4.17	11.33	4.35
	-7	13.31	3.69	12.99	3.85	12.67	4.02	12.51	4.11	12.35	4.20	11.98	4.38
	-6	13.60	3.72	13.30	3.88	13.00	4.05	12.84	4.14	12.69	4.22	12.32	4.41
	-5	13.91	3.75	13.62	3.91	13.34	4.08	13.19	4.17	13.03	4.25	12.68	4.44
	-3	14.57	3.78	14.32	3.94	14.07	4.11	13.92	4.20	13.76	4.28	13.42	4.48
	-1	15.30	3.81	15.07	3.96	14.85	4.15	14.70	4.24	14.54	4.32	14.21	4.51
	0	15.69	3.85	15.47	3.99	15.26	4.18	15.11	4.27	14.95	4.35	14.63	4.54
	1	16.10	3.88	15.89	4.02	15.68	4.21	15.53	4.30	15.38	4.38	15.05	4.57
	3	16.97	3.91	16.77	4.05	16.57	4.24	16.41	4.32	16.26	4.41	15.94	4.60
	5	17.90	3.94	17.71	4.09	17.51	4.27	17.35	4.35	17.20	4.44	16.88	4.63
	6	18.40	3.96	18.20	4.12	18.00	4.30	17.84	4.38	17.68	4.47	17.36	4.66
	7	18.91	3.99	18.71	4.15	18.50	4.32	18.34	4.41	18.18	4.50	17.86	4.69
	9	19.98	4.02	19.77	4.18	19.55	4.35	19.39	4.44	19.22	4.53	18.89	4.71
	10	20.54	4.05	20.32	4.21	20.10	4.38	19.93	4.47	19.76	4.56	19.43	4.74
	11	21.12	4.08	20.89	4.24	20.66	4.41	20.48	4.50	20.31	4.58	19.97	4.77
	14	22.95	4.11	22.68	4.27	22.41	4.44	22.22	4.53	22.04	4.61	21.68	4.80
	15	23.60	4.14	23.31	4.30	23.02	4.48	22.83	4.56	22.64	4.64	22.28	4.84

RAS-6FS(V)NME

	To/ Ti	16		18		20		21		22		24	
		CAP	IPT	CAP	IPT	CAP	IPT	CAP	IPT	CAP	IPT	CAP	IPT
100%	-20	11.10	3.49	10.36	3.63	9.62	3.82	9.41	3.91	9.19	3.99	8.63	4.18
	-17	11.35	3.52	10.74	3.66	10.12	3.85	9.93	3.94	9.73	4.02	9.22	4.21
	-15	11.61	3.55	11.07	3.69	10.52	3.88	10.34	3.96	10.15	4.05	9.68	4.24
	-13	11.93	3.58	11.46	3.73	10.98	3.91	10.80	3.99	10.63	4.08	10.18	4.27
	-11	12.32	3.60	11.91	3.76	11.49	3.94	11.32	4.02	11.15	4.11	10.73	4.30
	-10	12.54	3.63	12.16	3.79	11.77	3.96	11.60	4.05	11.43	4.14	11.03	4.32
	-9	12.78	3.66	12.42	3.82	12.05	3.99	11.89	4.08	11.73	4.17	11.33	4.35
	-7	13.31	3.69	12.99	3.85	12.67	4.02	12.51	4.11	12.35	4.20	11.98	4.38
	-6	13.60	3.72	13.30	3.88	13.00	4.05	12.84	4.14	12.69	4.22	12.32	4.41
	-5	13.91	3.75	13.62	3.91	13.34	4.08	13.19	4.17	13.03	4.25	12.68	4.44
	-3	14.57	3.78	14.32	3.94	14.07	4.11	13.92	4.20	13.76	4.28	13.42	4.48
	-1	15.30	3.81	15.07	3.96	14.85	4.15	14.70	4.24	14.54	4.32	14.21	4.51
	0	15.69	3.85	15.47	3.99	15.26	4.18	15.11	4.27	14.95	4.35	14.63	4.54
	1	16.10	3.88	15.89	4.02	15.68	4.21	15.53	4.30	15.38	4.38	15.05	4.57
	3	16.97	3.91	16.77	4.05	16.57	4.24	16.41	4.32	16.26	4.41	15.94	4.60
	5	17.90	3.94	17.71	4.09	17.51	4.27	17.35	4.35	17.20	4.44	16.88	4.63
	6	18.40	3.96	18.20	4.12	18.00	4.30	17.84	4.38	17.68	4.47	17.36	4.66
	7	18.91	3.99	18.71	4.15	18.50	4.32	18.34	4.41	18.18	4.50	17.86	4.69
	9	19.98	4.02	19.77	4.18	19.55	4.35	19.39	4.44	19.22	4.53	18.89	4.71
	10	20.54	4.05	20.32	4.21	20.10	4.38	19.93	4.47	19.76	4.56	19.43	4.74
	11	21.12	4.08	20.89	4.24	20.66	4.41	20.48	4.50	20.31	4.58	19.97	4.77
	14	22.95	4.11	22.68	4.27	22.41	4.44	22.22	4.53	22.04	4.61	21.68	4.80
	15	23.60	4.14	23.31	4.30	23.02	4.48	22.83	4.56	22.64	4.64	22.28	4.84
90%	-20	9.99	3.04	9.32	3.16	8.66	3.32	8.47	3.40	8.27	3.47	7.77	3.64
	-17	10.22	3.06	9.66	3.19	9.11	3.35	8.93	3.42	8.76	3.50	8.30	3.66
	-15	10.45	3.09	9.96	3.21	9.47	3.37	9.30	3.45	9.14	3.52	8.71	3.69
	-13	10.74	3.11	10.31	3.25	9.88	3.40	9.72	3.47	9.56	3.55	9.16	3.71
	-11	11.09	3.14	10.72	3.27	10.34	3.42	10.19	3.50	10.04	3.57	9.66	3.74
	-10	11.29	3.16	10.94	3.30	10.59	3.45	10.44	3.52	10.29	3.60	9.92	3.76
	-9	11.50	3.19	11.18	3.32	10.85	3.47	10.70	3.55	10.55	3.62	10.20	3.79
	-7	11.98	3.21	11.69	3.35	11.40	3.50	11.26	3.57	11.12	3.65	10.78	3.81
	-6	12.24	3.24	11.97	3.37	11.70	3.52	11.56	3.60	11.42	3.67	11.09	3.84
	-5	12.51	3.26	12.26	3.40	12.01	3.55	11.87	3.62	11.73	3.70	11.41	3.86
	-3	13.11	3.29	12.89	3.42	12.66	3.57	12.52	3.65	12.39	3.72	12.08	3.90
	-1	13.77	3.31	13.57	3.45	13.36	3.61	13.23	3.69	13.09	3.76	12.79	3.93
	0	14.12	3.35	13.93	3.47	13.73	3.64	13.60	3.71	13.46	3.79	13.16	3.95
	1	14.49	3.37	14.30	3.50	14.11	3.66	13.98	3.74	13.84	3.81	13.55	3.98
	3	15.27	3.40	15.09	3.52	14.91	3.69	14.77	3.76	14.63	3.84	14.35	4.00
	5	16.11	3.42	15.94	3.56	15.76	3.71	15.62	3.79	15.48	3.86	15.19	4.03
	6	16.56	3.45	16.38	3.59	16.20	3.74	16.06	3.81	15.91	3.89	15.63	4.05
	7	17.01	3.47	16.83	3.61	16.65	3.76	16.51	3.84	16.36	3.91	16.07	4.08
	9	17.98	3.50	17.79	3.64	17.60	3.79	17.45	3.86	17.30	3.94	17.00	4.10
	10	18.48	3.52	18.29	3.66	18.09	3.81	17.93	3.89	17.78	3.96	17.48	4.13
	11	19.00	3.55	18.80	3.69	18.59	3.84	18.43	3.91	18.28	3.99	17.97	4.15
	14	20.66	3.57	20.41	3.71	20.17	3.86	20.00	3.94	19.84	4.01	19.51	4.18
	15	21.24	3.60	20.98	3.74	20.72	3.90	20.55	3.96	20.38	4.04	20.05	4.21
80%	-20	8.88	2.69	8.29	2.80	7.70	2.94	7.53	3.01	7.36	3.07	6.90	3.22
	-17	9.08	2.71	8.59	2.82	8.10	2.96	7.94	3.03	7.78	3.10	7.38	3.24
	-15	9.29	2.73	8.85	2.84	8.42	2.99	8.27	3.05	8.12	3.12	7.74	3.26
	-13	9.55	2.75	9.17	2.87	8.78	3.01	8.64	3.07	8.50	3.14	8.15	3.29
	-11	9.86	2.78	9.53	2.90	9.19	3.03	9.06	3.10	8.92	3.16	8.59	3.31
	-10	10.04	2.80	9.72	2.92	9.41	3.05	9.28	3.12	9.15	3.19	8.82	3.33
	-9	10.23	2.82	9.93	2.94	9.64	3.07	9.51	3.14	9.38	3.21	9.07	3.35
	-7	10.65	2.84	10.39	2.96	10.14	3.10	10.01	3.16	9.88	3.23	9.58	3.37
	-6	10.88	2.86	10.64	2.99	10.40	3.12	10.28	3.19	10.15	3.25	9.86	3.40
	-5	11.12	2.89	10.90	3.01	10.67	3.14	10.55	3.21	10.43	3.27	10.14	3.42
	-3	11.65	2.91	11.46	3.03	11.26	3.16	11.13	3.23	11.01	3.30	10.74	3.45
	-1	12.24	2.93	12.06	3.05	11.88	3.20	11.76	3.26	11.64	3.33	11.37	3.47
	0	12.55	2.96	12.38	3.07	12.21	3.22	12.08	3.29	11.96	3.35	11.70	3.50
	1	12.88	2.99	12.71	3.10	12.55	3.24	12.42	3.31	12.30	3.37	12.04	3.52
	3	13.57	3.01	13.41	3.12	13.25	3.26	13.13	3.33	13.01	3.40	12.75	3.54
	5	14.32	3.03	14.16	3.15	14.01	3.29	13.88	3.35	13.76	3.42	13.50	3.56
	6	14.72	3.05	14.56	3.17	14.40	3.31	14.27	3.37	14.15	3.44	13.89	3.59
	7	15.12	3.07	14.96	3.20	14.80	3.33	14.67	3.40	14.55	3.46	14.29	3.61
	9	15.98	3.10	15.81	3.22	15.64	3.35	15.51	3.42	15.38	3.49	15.11	3.63
	10	16.43	3.12	16.25	3.24	16.08	3.37	15.94	3.44	15.81	3.51	15.54	3.65
	11	16.89	3.14	16.71	3.26	16.52	3.40	16.39	3.46	16.25	3.53	15.98	3.67
	14	18.36	3.16	18.15	3.29	17.93	3.42	17.78	3.49	17.63	3.55	17.35	3.70
	15	18.88	3.19	18.65	3.31	18.42	3.45	18.27	3.51	18.11	3.57	17.82	3.73

RAS-6FS(V)NME

	To/ Ti	16		18		20		21		22		24	
		CAP	IPT	CAP	IPT	CAP	IPT	CAP	IPT	CAP	IPT	CAP	IPT
70%	-20	7.77	2.30	7.25	2.40	6.73	2.52	6.58	2.58	6.44	2.64	6.04	2.76
	-17	7.95	2.32	7.52	2.42	7.09	2.54	6.95	2.60	6.81	2.65	6.46	2.78
	-15	8.13	2.34	7.75	2.44	7.37	2.56	7.24	2.62	7.11	2.67	6.78	2.80
	-13	8.35	2.36	8.02	2.46	7.69	2.58	7.56	2.64	7.44	2.69	7.13	2.82
	-11	8.63	2.38	8.33	2.48	8.04	2.60	7.92	2.65	7.81	2.71	7.51	2.84
	-10	8.78	2.40	8.51	2.50	8.24	2.62	8.12	2.67	8.00	2.73	7.72	2.85
	-9	8.95	2.42	8.69	2.52	8.44	2.64	8.32	2.69	8.21	2.75	7.93	2.87
	-7	9.32	2.44	9.09	2.54	8.87	2.65	8.76	2.71	8.65	2.77	8.39	2.89
	-6	9.52	2.45	9.31	2.56	9.10	2.67	8.99	2.73	8.88	2.79	8.63	2.91
	-5	9.73	2.47	9.54	2.58	9.34	2.69	9.23	2.75	9.12	2.81	8.87	2.93
	-3	10.20	2.49	10.02	2.60	9.85	2.71	9.74	2.77	9.63	2.83	9.39	2.96
	-1	10.71	2.51	10.55	2.62	10.39	2.74	10.29	2.80	10.18	2.85	9.95	2.98
	0	10.98	2.54	10.83	2.64	10.68	2.76	10.57	2.82	10.47	2.87	10.24	3.00
	1	11.27	2.56	11.12	2.65	10.98	2.78	10.87	2.84	10.76	2.89	10.54	3.02
	3	11.88	2.58	11.74	2.67	11.60	2.80	11.49	2.85	11.38	2.91	11.16	3.04
	5	12.53	2.60	12.39	2.70	12.26	2.82	12.15	2.87	12.04	2.93	11.81	3.05
	6	12.88	2.62	12.74	2.72	12.60	2.84	12.49	2.89	12.38	2.95	12.15	3.07
	7	13.23	2.64	13.09	2.74	12.95	2.85	12.84	2.91	12.73	2.97	12.50	3.09
	9	13.98	2.65	13.84	2.76	13.69	2.87	13.57	2.93	13.45	2.99	13.22	3.11
	10	14.38	2.67	14.22	2.78	14.07	2.89	13.95	2.95	13.83	3.01	13.60	3.13
	11	14.78	2.69	14.62	2.80	14.46	2.91	14.34	2.97	14.22	3.03	13.98	3.15
	14	16.07	2.71	15.88	2.82	15.69	2.93	15.56	2.99	15.43	3.04	15.18	3.17
	15	16.52	2.73	16.32	2.84	16.12	2.96	15.98	3.01	15.85	3.06	15.59	3.20
60%	-20	6.66	1.99	6.22	2.07	5.77	2.18	5.64	2.23	5.52	2.28	5.18	2.38
	-17	6.81	2.00	6.44	2.09	6.07	2.19	5.96	2.24	5.84	2.29	5.53	2.40
	-15	6.97	2.02	6.64	2.10	6.31	2.21	6.20	2.26	6.09	2.31	5.81	2.42
	-13	7.16	2.04	6.87	2.13	6.59	2.23	6.48	2.28	6.38	2.33	6.11	2.43
	-11	7.39	2.05	7.14	2.14	6.89	2.24	6.79	2.29	6.69	2.34	6.44	2.45
	-10	7.53	2.07	7.29	2.16	7.06	2.26	6.96	2.31	6.86	2.36	6.62	2.47
	-9	7.67	2.09	7.45	2.18	7.23	2.28	7.13	2.33	7.04	2.37	6.80	2.48
	-7	7.99	2.10	7.79	2.19	7.60	2.29	7.51	2.34	7.41	2.39	7.19	2.50
	-6	8.16	2.12	7.98	2.21	7.80	2.31	7.71	2.36	7.61	2.41	7.39	2.51
	-5	8.34	2.14	8.17	2.23	8.01	2.33	7.91	2.37	7.82	2.42	7.61	2.53
	-3	8.74	2.15	8.59	2.24	8.44	2.34	8.35	2.39	8.26	2.44	8.05	2.56
	-1	9.18	2.17	9.04	2.26	8.91	2.37	8.82	2.42	8.73	2.47	8.53	2.57
	0	9.41	2.19	9.28	2.28	9.15	2.38	9.06	2.43	8.97	2.48	8.78	2.59
	1	9.66	2.21	9.53	2.29	9.41	2.40	9.32	2.45	9.23	2.50	9.03	2.60
	3	10.18	2.23	10.06	2.31	9.94	2.42	9.85	2.47	9.76	2.51	9.56	2.62
	5	10.74	2.24	10.62	2.33	10.51	2.43	10.41	2.48	10.32	2.53	10.13	2.64
	6	11.04	2.26	10.92	2.35	10.80	2.45	10.70	2.50	10.61	2.55	10.42	2.65
	7	11.34	2.28	11.22	2.37	11.10	2.47	11.01	2.51	10.91	2.56	10.72	2.67
	9	11.99	2.29	11.86	2.38	11.73	2.48	11.63	2.53	11.53	2.58	11.34	2.69
	10	12.32	2.31	12.19	2.40	12.06	2.50	11.96	2.55	11.85	2.60	11.66	2.70
	11	12.67	2.33	12.53	2.42	12.39	2.51	12.29	2.56	12.19	2.61	11.98	2.72
	14	13.77	2.34	13.61	2.43	13.45	2.53	13.33	2.58	13.22	2.63	13.01	2.74
	15	14.16	2.36	13.99	2.45	13.81	2.56	13.70	2.60	13.58	2.65	13.37	2.76
50%	-20	5.55	1.64	5.18	1.71	4.81	1.80	4.70	1.84	4.60	1.88	4.32	1.96
	-17	5.68	1.65	5.37	1.72	5.06	1.81	4.96	1.85	4.87	1.89	4.61	1.98
	-15	5.80	1.67	5.53	1.73	5.26	1.82	5.17	1.86	5.08	1.90	4.84	1.99
	-13	5.97	1.68	5.73	1.75	5.49	1.84	5.40	1.88	5.31	1.92	5.09	2.01
	-11	6.16	1.69	5.95	1.77	5.75	1.85	5.66	1.89	5.58	1.93	5.37	2.02
	-10	6.27	1.71	6.08	1.78	5.88	1.86	5.80	1.90	5.72	1.94	5.51	2.03
	-9	6.39	1.72	6.21	1.80	6.03	1.88	5.95	1.92	5.86	1.96	5.67	2.05
	-7	6.66	1.73	6.50	1.81	6.34	1.89	6.26	1.93	6.18	1.97	5.99	2.06
	-6	6.80	1.75	6.65	1.82	6.50	1.90	6.42	1.94	6.34	1.99	6.16	2.07
	-5	6.95	1.76	6.81	1.84	6.67	1.92	6.59	1.96	6.52	2.00	6.34	2.09
	-3	7.28	1.78	7.16	1.85	7.03	1.93	6.96	1.97	6.88	2.01	6.71	2.11
	-1	7.65	1.79	7.54	1.86	7.42	1.95	7.35	1.99	7.27	2.03	7.11	2.12
	0	7.85	1.81	7.74	1.88	7.63	1.96	7.55	2.01	7.48	2.05	7.31	2.13
	1	8.05	1.82	7.95	1.89	7.84	1.98	7.76	2.02	7.69	2.06	7.53	2.15
	3	8.48	1.84	8.38	1.90	8.28	1.99	8.21	2.03	8.13	2.07	7.97	2.16
	5	8.95	1.85	8.85	1.92	8.75	2.01	8.68	2.05	8.60	2.09	8.44	2.17
	6	9.20	1.86	9.10	1.94	9.00	2.02	8.92	2.06	8.84	2.10	8.68	2.19
	7	9.45	1.88	9.35	1.95	9.25	2.03	9.17	2.07	9.09	2.11	8.93	2.20
	9	9.99	1.89	9.88	1.96	9.78	2.05	9.69	2.09	9.61	2.13	9.45	2.22
	10	10.27	1.90	10.16	1.98	10.05	2.06	9.96	2.10	9.88	2.14	9.71	2.23
	11	10.56	1.92	10.44	1.99	10.33	2.07	10.24	2.11	10.15	2.15	9.99	2.24
	14	11.48	1.93	11.34	2.01	11.20	2.09	11.11	2.13	11.02	2.17	10.84	2.26
	15	11.80	1.94	11.66	2.02	11.51	2.11	11.42	2.14	11.32	2.18	11.14	2.28

11.2.2 FSXNME

◆ RAS-8FSXNME

	To/ Ti	16		18		20		21		22		24	
		CAP	IPT	CAP	IPT	CAP	IPT	CAP	IPT	CAP	IPT	CAP	IPT
130%	-20	16.54	4.36	16.12	4.57	16.02	4.80	15.91	4.90	15.81	5.05	15.60	5.27
	-17	17.47	4.40	17.12	4.62	17.01	4.85	16.91	4.95	16.81	5.11	16.60	5.31
	-15	18.10	4.45	17.78	4.65	17.68	4.88	17.58	4.99	17.47	5.13	17.26	5.32
	-13	18.72	4.45	18.45	4.65	18.35	4.90	18.24	4.99	18.14	5.13	17.93	5.32
	-11	19.34	4.46	19.12	4.66	19.01	4.90	18.91	5.01	18.80	5.15	18.60	5.33
	-10	19.66	4.47	19.45	4.67	19.34	4.91	19.24	5.01	19.14	5.16	18.93	5.34
	-9	19.97	4.46	19.78	4.66	19.68	4.90	19.57	5.01	19.47	5.15	19.26	5.34
	-7	20.59	4.46	20.45	4.66	20.34	4.90	20.24	5.01	20.13	5.15	19.93	5.34
	-6	20.90	4.46	20.78	4.66	20.68	4.90	20.57	5.01	20.47	5.15	20.26	5.34
	-5	21.22	4.47	21.11	4.67	21.01	4.91	20.90	5.01	20.80	5.15	20.59	5.34
	-3	22.42	4.49	22.28	4.69	22.13	4.94	22.03	5.08	21.92	5.21	21.63	5.37
	-1	23.63	4.54	23.44	4.73	23.25	4.98	23.15	5.14	23.05	5.24	22.67	5.35
	0	24.23	4.55	24.02	4.75	23.82	5.01	23.71	5.16	23.61	5.26	23.19	5.33
	1	26.23	4.57	25.71	4.77	25.13	5.01	24.74	5.14	24.36	5.21	23.19	5.17
	3	27.56	4.62	26.83	4.84	26.00	5.03	25.43	5.11	24.86	5.04	23.19	4.83
	5	27.56	4.65	26.83	4.90	26.00	5.04	25.43	5.00	24.86	4.79	23.19	4.39
	6	27.77	4.65	27.04	4.85	26.00	5.00	25.43	4.85	24.86	4.65	23.19	4.25
	7	28.18	4.65	27.38	4.85	26.21	4.88	25.55	4.74	24.88	4.57	23.19	4.17
	9	29.02	4.67	28.05	4.85	26.62	4.68	25.78	4.54	24.93	4.39	23.19	4.02
	10	29.43	4.69	28.39	4.84	26.83	4.59	25.90	4.44	24.96	4.30	23.19	3.95
	11	29.43	4.72	28.39	4.78	26.83	4.53	25.90	4.38	24.96	4.22	23.19	3.87
	14	29.43	4.78	28.39	4.60	26.83	4.32	25.90	4.17	24.96	4.01	23.19	3.67
	15	29.43	4.79	28.39	4.54	26.83	4.25	25.90	4.10	24.96	3.95	23.19	3.60
120%	-20	16.46	4.50	16.04	4.72	15.94	4.95	15.84	5.06	15.73	5.21	15.53	5.44
	-17	17.39	4.54	17.04	4.76	16.93	5.00	16.83	5.11	16.73	5.27	16.52	5.48
	-15	18.01	4.59	17.70	4.80	17.60	5.04	17.49	5.14	17.39	5.29	17.18	5.49
	-13	18.63	4.59	18.36	4.80	18.26	5.06	18.15	5.15	18.05	5.29	17.84	5.49
	-11	19.25	4.60	19.02	4.81	18.92	5.06	18.82	5.17	18.71	5.31	18.51	5.50
	-10	19.56	4.61	19.35	4.81	19.25	5.06	19.15	5.17	19.04	5.32	18.84	5.51
	-9	19.87	4.60	19.69	4.81	19.58	5.06	19.48	5.17	19.38	5.31	19.17	5.51
	-7	20.49	4.60	20.35	4.81	20.24	5.06	20.14	5.17	20.04	5.31	19.83	5.51
	-6	20.80	4.60	20.68	4.81	20.58	5.06	20.47	5.17	20.37	5.31	20.16	5.51
	-5	21.11	4.61	21.01	4.81	20.91	5.06	20.80	5.17	20.70	5.31	20.49	5.51
	-3	22.31	4.64	22.17	4.84	22.02	5.10	21.92	5.24	21.82	5.37	21.53	5.54
	-1	23.52	4.68	23.33	4.88	23.14	5.14	23.04	5.30	22.94	5.41	22.56	5.52
	0	24.12	4.70	23.91	4.90	23.70	5.17	23.60	5.32	23.49	5.42	23.08	5.50
	1	26.10	4.72	25.59	4.92	25.01	5.17	24.62	5.30	24.24	5.38	23.08	5.34
	3	27.43	4.76	26.70	5.00	25.88	5.19	25.31	5.27	24.74	5.20	23.08	4.98
	5	27.43	4.79	26.70	5.05	25.88	5.20	25.31	5.15	24.74	4.94	23.08	4.52
	6	27.63	4.79	26.91	5.00	25.88	5.15	25.31	5.00	24.74	4.79	23.08	4.39
	7	28.05	4.80	27.25	5.01	26.08	5.03	25.42	4.89	24.76	4.71	23.08	4.30
	9	28.88	4.82	27.92	5.01	26.50	4.83	25.66	4.68	24.81	4.53	23.08	4.14
	10	29.29	4.84	28.26	5.00	26.70	4.74	25.77	4.58	24.84	4.44	23.08	4.07
	11	29.29	4.87	28.26	4.94	26.70	4.67	25.77	4.52	24.84	4.35	23.08	4.00
	14	29.29	4.93	28.26	4.75	26.70	4.46	25.77	4.31	24.84	4.14	23.08	3.78
	15	29.29	4.95	28.26	4.69	26.70	4.39	25.77	4.23	24.84	4.07	23.08	3.71

RAS-8FSXNME

	To/ Ti	16		18		20		21		22		24	
		CAP	IPT	CAP	IPT	CAP	IPT	CAP	IPT	CAP	IPT	CAP	IPT
110%	-20	16.38	4.59	15.97	4.81	15.86	5.05	15.76	5.16	15.66	5.32	15.45	5.55
	-17	17.30	4.64	16.95	4.86	16.85	5.10	16.75	5.21	16.64	5.37	16.44	5.59
	-15	17.92	4.68	17.61	4.89	17.51	5.14	17.41	5.25	17.30	5.40	17.10	5.60
	-13	18.54	4.68	18.27	4.90	18.17	5.16	18.07	5.25	17.96	5.40	17.76	5.60
	-11	19.16	4.70	18.93	4.91	18.83	5.16	18.73	5.27	18.62	5.42	18.42	5.61
	-10	19.47	4.70	19.26	4.91	19.16	5.16	19.06	5.27	18.95	5.43	18.75	5.62
	-9	19.78	4.69	19.59	4.91	19.49	5.16	19.38	5.27	19.28	5.42	19.08	5.62
	-7	20.39	4.69	20.25	4.91	20.15	5.16	20.04	5.27	19.94	5.42	19.73	5.62
	-6	20.70	4.69	20.58	4.91	20.48	5.16	20.37	5.27	20.27	5.42	20.06	5.62
	-5	21.01	4.70	20.91	4.91	20.81	5.16	20.70	5.27	20.60	5.42	20.39	5.62
	-3	22.21	4.73	22.06	4.94	21.92	5.20	21.82	5.35	21.71	5.48	21.42	5.65
	-1	23.40	4.78	23.22	4.98	23.03	5.25	22.93	5.41	22.82	5.52	22.45	5.63
	0	24.00	4.79	23.79	5.00	23.59	5.27	23.48	5.43	23.38	5.54	22.97	5.61
	1	25.98	4.82	25.46	5.02	24.88	5.28	24.50	5.41	24.12	5.49	22.97	5.45
	3	27.30	4.86	26.57	5.10	25.75	5.29	25.18	5.38	24.62	5.30	22.97	5.08
	5	27.30	4.89	26.57	5.15	25.75	5.31	25.18	5.26	24.62	5.05	22.97	4.62
	6	27.50	4.89	26.78	5.11	25.75	5.26	25.18	5.11	24.62	4.89	22.97	4.48
	7	27.91	4.89	27.11	5.11	25.96	5.14	25.30	4.99	24.64	4.81	22.97	4.39
	9	28.74	4.92	27.78	5.11	26.37	4.93	25.53	4.78	24.69	4.62	22.97	4.23
	10	29.15	4.94	28.12	5.10	26.57	4.84	25.65	4.67	24.72	4.53	22.97	4.16
	11	29.15	4.97	28.12	5.04	26.57	4.77	25.65	4.62	24.72	4.44	22.97	4.08
	14	29.15	5.03	28.12	4.85	26.57	4.55	25.65	4.39	24.72	4.22	22.97	3.86
	15	29.15	5.05	28.12	4.78	26.57	4.48	25.65	4.32	24.72	4.16	22.97	3.79
100%	-20	15.90	4.59	15.50	4.81	15.40	5.05	15.30	5.16	15.20	5.32	15.00	5.55
	-17	16.80	4.64	16.46	4.86	16.36	5.10	16.26	5.21	16.16	5.37	15.96	5.59
	-15	17.40	4.68	17.10	4.89	17.00	5.14	16.90	5.25	16.80	5.40	16.60	5.60
	-13	18.00	4.68	17.74	4.90	17.64	5.16	17.54	5.25	17.44	5.40	17.24	5.60
	-11	18.60	4.70	18.38	4.91	18.28	5.16	18.18	5.27	18.08	5.42	17.88	5.61
	-10	18.90	4.70	18.70	4.91	18.60	5.16	18.50	5.27	18.40	5.43	18.20	5.62
	-9	19.20	4.69	19.02	4.91	18.92	5.16	18.82	5.27	18.72	5.42	18.52	5.62
	-7	19.80	4.69	19.66	4.91	19.56	5.16	19.46	5.27	19.36	5.42	19.16	5.62
	-6	20.10	4.69	19.98	4.91	19.88	5.16	19.78	5.27	19.68	5.42	19.48	5.62
	-5	20.40	4.70	20.30	4.91	20.20	5.16	20.10	5.27	20.00	5.42	19.80	5.62
	-3	21.56	4.73	21.42	4.94	21.28	5.20	21.18	5.35	21.08	5.48	20.80	5.65
	-1	22.72	4.78	22.54	4.98	22.36	5.25	22.26	5.41	22.16	5.52	21.80	5.63
	0	23.30	4.79	23.10	5.00	22.90	5.27	22.80	5.43	22.70	5.54	22.30	5.61
	1	25.22	4.82	24.72	5.02	24.16	5.28	23.79	5.41	23.42	5.49	22.30	5.45
	3	26.50	4.86	25.80	5.10	25.00	5.29	24.45	5.38	23.90	5.30	22.30	5.08
	5	26.50	4.89	25.80	5.15	25.00	5.31	24.45	5.26	23.90	5.05	22.30	4.62
	6	26.70	4.89	26.00	5.11	25.00	5.26	24.45	5.11	23.90	4.89	22.30	4.48
	7	27.10	4.89	26.33	5.11	25.20	5.14	24.56	4.99	23.93	4.81	22.30	4.39
	9	27.90	4.92	26.98	5.11	25.60	4.93	24.79	4.78	23.98	4.62	22.30	4.23
	10	28.30	4.94	27.30	5.10	25.80	4.84	24.90	4.67	24.00	4.53	22.30	4.16
	11	28.30	4.97	27.30	5.04	25.80	4.77	24.90	4.62	24.00	4.44	22.30	4.08
	14	28.30	5.03	27.30	4.85	25.80	4.55	24.90	4.39	24.00	4.22	22.30	3.86
	15	28.30	5.05	27.30	4.78	25.80	4.48	24.90	4.32	24.00	4.16	22.30	3.79
90%	-20	15.90	3.99	15.50	4.19	15.40	4.40	15.30	4.49	15.20	4.63	15.00	4.83
	-17	16.80	4.03	16.46	4.23	16.36	4.44	16.26	4.54	16.16	4.68	15.96	4.87
	-15	17.40	4.07	17.10	4.26	17.00	4.47	16.90	4.57	16.80	4.70	16.60	4.87
	-13	18.00	4.07	17.74	4.26	17.64	4.49	17.54	4.57	17.44	4.70	17.24	4.88
	-11	18.60	4.08	18.38	4.27	18.28	4.49	18.18	4.59	18.08	4.71	17.88	4.88
	-10	18.90	4.09	18.70	4.27	18.60	4.49	18.50	4.59	18.40	4.72	18.20	4.89
	-9	19.20	4.08	19.02	4.27	18.92	4.49	18.82	4.59	18.72	4.72	18.52	4.89
	-7	19.80	4.08	19.66	4.27	19.56	4.49	19.46	4.59	19.36	4.72	19.16	4.89
	-6	20.10	4.08	19.98	4.27	19.88	4.49	19.78	4.59	19.68	4.72	19.48	4.89
	-5	20.40	4.09	20.30	4.27	20.20	4.49	20.10	4.59	20.00	4.71	19.80	4.89
	-3	21.56	4.11	21.42	4.30	21.28	4.53	21.18	4.65	21.08	4.77	20.07	4.91
	-1	22.72	4.15	22.54	4.34	22.36	4.56	22.11	4.71	21.53	4.80	20.07	4.90
	0	23.30	4.17	23.10	4.35	22.68	4.59	22.11	4.72	21.53	4.82	20.07	4.88
	1	24.39	4.19	23.69	4.37	22.68	4.59	22.11	4.71	21.53	4.77	20.07	4.74
	3	24.39	4.23	23.69	4.44	22.68	4.60	22.11	4.68	21.53	4.61	20.07	4.42
	5	24.39	4.26	23.69	4.48	22.68	4.62	22.11	4.58	21.53	4.39	20.07	4.02
	6	24.39	4.26	23.69	4.44	22.68	4.58	22.11	4.44	21.53	4.26	20.07	3.90
	7	24.39	4.26	23.69	4.44	22.68	4.47	22.11	4.34	21.53	4.18	20.07	3.82
	9	25.11	4.28	24.28	4.44	23.04	4.29	22.31	4.16	21.58	4.02	20.07	3.68
	10	25.47	4.30	24.57	4.44	23.22	4.21	22.41	4.07	21.60	3.94	20.07	3.62
	11	25.47	4.32	24.57	4.38	23.22	4.15	22.41	4.02	21.60	3.87	20.07	3.55
	14	25.47	4.38	24.57	4.22	23.22	3.96	22.41	3.82	21.60	3.67	20.07	3.36
	15	25.47	4.39	24.57	4.16	23.22	3.89	22.41	3.76	21.60	3.62	20.07	3.29

RAS-8FSXNME

	To/ Ti	16		18		20		21		22		24	
		CAP	IPT	CAP	IPT	CAP	IPT	CAP	IPT	CAP	IPT	CAP	IPT
80%	-20	15.90	3.53	15.50	3.71	15.40	3.89	15.30	3.98	15.20	4.10	15.00	4.27
	-17	16.80	3.57	16.46	3.74	16.36	3.93	16.26	4.02	16.16	4.14	15.96	4.31
	-15	17.40	3.60	17.10	3.77	17.00	3.96	16.90	4.04	16.80	4.16	16.60	4.31
	-13	18.00	3.60	17.74	3.77	17.64	3.98	17.54	4.04	17.44	4.16	17.24	4.32
	-11	18.60	3.62	18.38	3.78	18.28	3.98	18.18	4.06	18.08	4.17	17.84	4.32
	-10	18.90	3.62	18.70	3.78	18.60	3.98	18.50	4.06	18.40	4.18	17.84	4.33
	-9	19.20	3.61	19.02	3.78	18.92	3.98	18.82	4.06	18.72	4.18	17.84	4.33
	-7	19.80	3.61	19.66	3.78	19.56	3.98	19.46	4.06	19.14	4.18	17.84	4.33
	-6	20.10	3.61	19.98	3.78	19.88	3.98	19.65	4.06	19.14	4.18	17.84	4.33
	-5	20.40	3.62	20.30	3.78	20.16	3.98	19.65	4.06	19.14	4.17	17.84	4.33
	-3	21.56	3.64	21.06	3.80	20.16	4.01	19.65	4.12	19.14	4.22	17.84	4.35
	-1	21.68	3.68	21.06	3.84	20.16	4.04	19.65	4.17	19.14	4.25	17.84	4.34
	0	21.68	3.69	21.06	3.85	20.16	4.06	19.65	4.18	19.14	4.26	17.84	4.32
	1	21.68	3.71	21.06	3.87	20.16	4.06	19.65	4.17	19.14	4.23	17.84	4.19
	3	21.68	3.74	21.06	3.93	20.16	4.07	19.65	4.14	19.14	4.08	17.84	3.91
	5	21.68	3.77	21.06	3.97	20.16	4.09	19.65	4.05	19.14	3.88	17.84	3.55
	6	21.68	3.77	21.06	3.93	20.16	4.05	19.65	3.93	19.14	3.77	17.84	3.45
	7	21.68	3.77	21.06	3.93	20.16	3.96	19.65	3.84	19.14	3.70	17.84	3.38
	9	22.32	3.79	21.58	3.93	20.48	3.79	19.83	3.68	19.18	3.56	17.84	3.25
	10	22.64	3.81	21.84	3.93	20.64	3.72	19.92	3.60	19.20	3.49	17.84	3.20
	11	22.64	3.82	21.84	3.88	20.64	3.67	19.92	3.55	19.20	3.42	17.84	3.14
	14	22.64	3.87	21.84	3.73	20.64	3.50	19.92	3.38	19.20	3.25	17.84	2.97
	15	22.64	3.89	21.84	3.68	20.64	3.45	19.92	3.33	19.20	3.20	17.84	2.92
70%	-20	15.90	3.03	15.50	3.18	15.40	3.34	15.30	3.41	15.20	3.51	15.00	3.66
	-17	16.80	3.06	16.46	3.21	16.36	3.37	16.26	3.44	16.16	3.55	15.61	3.69
	-15	17.40	3.09	17.10	3.23	17.00	3.39	16.90	3.46	16.75	3.56	15.61	3.70
	-13	18.00	3.09	17.74	3.23	17.64	3.41	17.19	3.47	16.75	3.56	15.61	3.70
	-11	18.60	3.10	18.38	3.24	17.64	3.41	17.19	3.48	16.75	3.58	15.61	3.70
	-10	18.90	3.10	18.43	3.24	17.64	3.41	17.19	3.48	16.75	3.58	15.61	3.71
	-9	18.97	3.10	18.43	3.24	17.64	3.41	17.19	3.48	16.75	3.58	15.61	3.71
	-7	18.97	3.10	18.43	3.24	17.64	3.41	17.19	3.48	16.75	3.58	15.61	3.71
	-6	18.97	3.10	18.43	3.24	17.64	3.41	17.19	3.48	16.75	3.58	15.61	3.71
	-5	18.97	3.10	18.43	3.24	17.64	3.41	17.19	3.48	16.75	3.58	15.61	3.71
	-3	18.97	3.12	18.43	3.26	17.64	3.44	17.19	3.53	16.75	3.62	15.61	3.73
	-1	18.97	3.15	18.43	3.29	17.64	3.46	17.19	3.57	16.75	3.64	15.61	3.72
	0	18.97	3.16	18.43	3.30	17.64	3.48	17.19	3.58	16.75	3.65	15.61	3.70
	1	18.97	3.18	18.43	3.31	17.64	3.48	17.19	3.57	16.75	3.62	15.61	3.59
	3	18.97	3.21	18.43	3.37	17.64	3.49	17.19	3.55	16.75	3.50	15.61	3.35
	5	18.97	3.23	18.43	3.40	17.64	3.50	17.19	3.47	16.75	3.33	15.61	3.05
	6	18.97	3.23	18.43	3.37	17.64	3.47	17.19	3.37	16.75	3.23	15.61	2.96
	7	18.97	3.23	18.43	3.37	17.64	3.39	17.19	3.29	16.75	3.17	15.61	2.89
	9	19.53	3.25	18.88	3.37	17.92	3.25	17.35	3.15	16.78	3.05	15.61	2.79
	10	19.81	3.26	19.11	3.37	18.06	3.19	17.43	3.09	16.80	2.99	15.61	2.74
	11	19.81	3.28	19.11	3.32	18.06	3.15	17.43	3.05	16.80	2.93	15.61	2.69
	14	19.81	3.32	19.11	3.20	18.06	3.00	17.43	2.90	16.80	2.79	15.61	2.55
	15	19.81	3.33	19.11	3.16	18.06	2.95	17.43	2.85	16.80	2.74	15.61	2.50
60%	-20	15.90	2.62	15.50	2.74	15.12	2.88	14.74	2.94	14.36	3.03	13.38	3.16
	-17	16.26	2.64	15.80	2.77	15.12	2.91	14.74	2.97	14.36	3.06	13.38	3.19
	-15	16.26	2.67	15.80	2.79	15.12	2.93	14.74	2.99	14.36	3.08	13.38	3.19
	-13	16.26	2.67	15.80	2.79	15.12	2.94	14.74	2.99	14.36	3.08	13.38	3.19
	-11	16.26	2.68	15.80	2.80	15.12	2.94	14.74	3.00	14.36	3.09	13.38	3.20
	-10	16.26	2.68	15.80	2.80	15.12	2.94	14.74	3.00	14.36	3.09	13.38	3.20
	-9	16.26	2.67	15.80	2.80	15.12	2.94	14.74	3.00	14.36	3.09	13.38	3.20
	-7	16.26	2.67	15.80	2.80	15.12	2.94	14.74	3.00	14.36	3.09	13.38	3.20
	-6	16.26	2.67	15.80	2.80	15.12	2.94	14.74	3.00	14.36	3.09	13.38	3.20
	-5	16.26	2.68	15.80	2.80	15.12	2.94	14.74	3.00	14.36	3.09	13.38	3.20
	-3	16.26	2.70	15.80	2.82	15.12	2.97	14.74	3.05	14.36	3.12	13.38	3.22
	-1	16.26	2.72	15.80	2.84	15.12	2.99	14.74	3.08	14.36	3.15	13.38	3.21
	0	16.26	2.73	15.80	2.85	15.12	3.00	14.74	3.09	14.36	3.16	13.38	3.20
	1	16.26	2.74	15.80	2.86	15.12	3.01	14.74	3.08	14.36	3.13	13.38	3.10
	3	16.26	2.77	15.80	2.91	15.12	3.02	14.74	3.06	14.36	3.02	13.38	2.90
	5	16.26	2.79	15.80	2.94	15.12	3.02	14.74	3.00	14.36	2.88	13.38	2.63
	6	16.26	2.79	15.80	2.91	15.12	3.00	14.74	2.91	14.36	2.79	13.38	2.55
	7	16.26	2.79	15.80	2.91	15.12	2.93	14.74	2.84	14.36	2.74	13.38	2.50
	9	16.74	2.80	16.19	2.91	15.36	2.81	14.87	2.72	14.39	2.64	13.38	2.41
	10	16.98	2.82	16.38	2.91	15.48	2.76	14.94	2.66	14.40	2.58	13.38	2.37
	11	16.98	2.83	16.38	2.87	15.48	2.72	14.94	2.63	14.40	2.53	13.38	2.32
	14	16.98	2.87	16.38	2.76	15.48	2.59	14.94	2.50	14.40	2.41	13.38	2.20
	15	16.98	2.88	16.38	2.73	15.48	2.55	14.94	2.46	14.40	2.37	13.38	2.16

RAS-8FSXNME

	To/ Ti	16		18		20		21		22		24	
		CAP	IPT	CAP	IPT	CAP	IPT	CAP	IPT	CAP	IPT	CAP	IPT
50%	-20	13.55	2.16	13.16	2.26	12.60	2.38	12.28	2.43	11.96	2.50	11.15	2.61
	-17	13.55	2.18	13.16	2.28	12.60	2.40	12.28	2.45	11.96	2.53	11.15	2.63
	-15	13.55	2.20	13.16	2.30	12.60	2.42	12.28	2.47	11.96	2.54	11.15	2.63
	-13	13.55	2.20	13.16	2.30	12.60	2.43	12.28	2.47	11.96	2.54	11.15	2.63
	-11	13.55	2.21	13.16	2.31	12.60	2.43	12.28	2.48	11.96	2.55	11.15	2.64
	-10	13.55	2.21	13.16	2.31	12.60	2.43	12.28	2.48	11.96	2.55	11.15	2.64
	-9	13.55	2.21	13.16	2.31	12.60	2.43	12.28	2.48	11.96	2.55	11.15	2.64
	-7	13.55	2.21	13.16	2.31	12.60	2.43	12.28	2.48	11.96	2.55	11.15	2.64
	-6	13.55	2.21	13.16	2.31	12.60	2.43	12.28	2.48	11.96	2.55	11.15	2.64
	-5	13.55	2.21	13.16	2.31	12.60	2.43	12.28	2.48	11.96	2.55	11.15	2.64
	-3	13.55	2.22	13.16	2.32	12.60	2.45	12.28	2.51	11.96	2.58	11.15	2.65
	-1	13.55	2.24	13.16	2.34	12.60	2.47	12.28	2.54	11.96	2.59	11.15	2.65
	0	13.55	2.25	13.16	2.35	12.60	2.48	12.28	2.55	11.96	2.60	11.15	2.64
	1	13.55	2.26	13.16	2.36	12.60	2.48	12.28	2.54	11.96	2.58	11.15	2.56
	3	13.55	2.28	13.16	2.40	12.60	2.49	12.28	2.53	11.96	2.49	11.15	2.39
	5	13.55	2.30	13.16	2.42	12.60	2.49	12.28	2.47	11.96	2.37	11.15	2.17
	6	13.55	2.30	13.16	2.40	12.60	2.47	12.28	2.40	11.96	2.30	11.15	2.10
	7	13.55	2.30	13.16	2.40	12.60	2.41	12.28	2.34	11.96	2.26	11.15	2.06
	9	13.95	2.31	13.49	2.40	12.80	2.32	12.39	2.24	11.99	2.17	11.15	1.99
	10	14.15	2.32	13.65	2.40	12.90	2.27	12.45	2.20	12.00	2.13	11.15	1.95
	11	14.15	2.33	13.65	2.37	12.90	2.24	12.45	2.17	12.00	2.09	11.15	1.92
	14	14.15	2.37	13.65	2.28	12.90	2.14	12.45	2.07	12.00	1.98	11.15	1.81
	15	14.15	2.37	13.65	2.25	12.90	2.10	12.45	2.03	12.00	1.95	11.15	1.78

◆ RAS-10FSXNME

	To/ Ti	16		18		20		21		22		24	
		CAP	IPT	CAP	IPT	CAP	IPT	CAP	IPT	CAP	IPT	CAP	IPT
130%	-20	18.11	6.46	17.89	6.81	17.47	7.09	17.38	7.29	17.33	7.42	17.33	7.71
	-17	19.28	6.53	19.07	6.88	18.65	7.16	18.61	7.37	18.46	7.49	18.46	7.79
	-15	20.07	6.57	19.86	6.92	19.43	7.20	19.43	7.42	19.22	7.56	19.22	7.83
	-13	21.02	6.57	20.72	6.92	20.34	7.21	20.25	7.41	20.07	7.54	20.00	7.84
	-11	21.98	6.57	21.58	6.92	21.25	7.21	21.08	7.41	20.92	7.54	20.78	7.84
	-10	22.46	6.57	22.01	6.92	21.70	7.20	21.49	7.42	21.35	7.56	21.18	7.83
	-9	22.94	6.57	22.55	6.92	22.29	7.21	22.13	7.41	21.99	7.54	21.83	7.84
	-7	23.91	6.57	23.61	6.92	23.48	7.21	23.40	7.41	23.27	7.54	23.15	7.84
	-6	24.40	6.57	24.14	6.92	24.08	7.21	24.03	7.41	23.92	7.54	23.80	7.84
	-5	24.88	6.57	24.67	6.92	24.67	7.20	24.67	7.42	24.56	7.56	24.46	7.83
	-3	26.37	6.48	26.15	6.80	26.07	7.07	26.02	7.25	25.92	7.38	25.86	7.45
	-1	27.85	6.40	27.63	6.68	27.47	6.94	27.38	7.09	27.28	7.22	27.26	7.07
	0	28.59	6.35	28.37	6.62	28.16	6.88	28.05	7.00	27.96	7.13	27.96	6.88
	1	29.37	6.38	29.16	6.64	28.99	6.84	28.81	6.90	28.72	6.95	28.69	6.65
	3	30.94	6.43	30.73	6.69	30.64	6.76	30.34	6.69	30.24	6.59	30.17	6.21
	5	32.50	6.48	32.30	6.75	32.30	6.68	31.87	6.48	31.76	6.22	31.64	5.76
	6	33.22	6.48	33.02	6.75	32.76	6.55	32.57	6.35	32.44	6.09	32.29	5.63
	7	33.95	6.48	33.74	6.68	33.61	6.45	33.27	6.26	33.11	5.99	32.95	5.53
	9	35.40	6.48	35.19	6.55	34.92	6.25	34.66	6.06	34.47	5.80	34.25	5.34
	10	36.12	6.48	35.91	6.48	35.58	6.15	35.36	5.96	35.15	5.70	34.90	5.24
	11	36.41	6.47	36.22	6.40	35.89	6.06	35.71	5.87	35.55	5.62	35.23	5.16
	14	37.26	6.43	37.12	6.17	36.80	5.79	36.76	5.59	36.72	5.38	36.22	4.92
	15	37.54	6.42	37.43	6.09	37.11	5.70	37.11	5.50	37.11	5.30	36.55	4.84
120%	-20	18.02	6.67	17.81	7.03	17.39	7.31	17.30	7.53	17.25	7.65	17.25	7.96
	-17	19.19	6.73	18.98	7.09	18.56	7.38	18.52	7.60	18.38	7.73	18.38	8.04
	-15	19.97	6.78	19.76	7.14	19.34	7.43	19.34	7.66	19.13	7.80	19.13	8.08
	-13	20.92	6.78	20.62	7.14	20.24	7.43	20.16	7.65	19.98	7.78	19.91	8.09
	-11	21.88	6.78	21.48	7.14	21.14	7.43	20.98	7.65	20.82	7.78	20.68	8.09
	-10	22.35	6.78	21.91	7.14	21.60	7.43	21.39	7.66	21.25	7.80	21.07	8.08
	-9	22.83	6.78	22.44	7.14	22.19	7.43	22.02	7.65	21.89	7.78	21.73	8.09
	-7	23.80	6.78	23.49	7.14	23.37	7.43	23.29	7.65	23.16	7.78	23.04	8.09
	-6	24.28	6.78	24.02	7.14	23.96	7.43	23.92	7.65	23.80	7.78	23.69	8.09
	-5	24.76	6.78	24.55	7.14	24.55	7.43	24.55	7.66	24.44	7.80	24.34	8.08
	-3	26.24	6.69	26.03	7.01	25.94	7.30	25.90	7.48	25.79	7.61	25.73	7.69
	-1	27.72	6.60	27.50	6.89	27.33	7.16	27.24	7.31	27.14	7.45	27.13	7.29
	0	28.46	6.55	28.24	6.83	28.03	7.09	27.92	7.23	27.82	7.36	27.82	7.09
	1	29.23	6.58	29.02	6.85	28.85	7.05	28.68	7.12	28.58	7.17	28.55	6.86
	3	30.79	6.63	30.58	6.90	30.50	6.97	30.20	6.90	30.09	6.79	30.02	6.41
	5	32.34	6.68	32.14	6.96	32.14	6.89	31.72	6.68	31.60	6.42	31.49	5.95
	6	33.06	6.68	32.86	6.96	32.60	6.75	32.41	6.55	32.28	6.28	32.14	5.81
	7	33.78	6.69	33.58	6.89	33.45	6.65	33.11	6.45	32.96	6.18	32.79	5.71
	9	35.23	6.69	35.02	6.75	34.76	6.45	34.50	6.25	34.31	5.98	34.08	5.51
	10	35.95	6.68	35.74	6.68	35.41	6.35	35.19	6.15	34.98	5.88	34.73	5.41
	11	36.23	6.67	36.04	6.61	35.71	6.25	35.54	6.05	35.37	5.80	35.06	5.33
	14	37.08	6.63	36.94	6.37	36.63	5.97	36.58	5.77	36.54	5.55	36.05	5.08
	15	37.36	6.62	37.25	6.28	36.93	5.88	36.93	5.67	36.93	5.47	36.38	5.00
110%	-20	17.94	6.81	17.72	7.17	17.30	7.46	17.22	7.68	17.17	7.81	17.17	8.12
	-17	19.10	6.87	18.89	7.24	18.47	7.54	18.43	7.75	18.29	7.89	18.29	8.20
	-15	19.87	6.92	19.67	7.29	19.24	7.58	19.24	7.81	19.03	7.96	19.03	8.25
	-13	20.82	6.92	20.52	7.29	20.14	7.58	20.06	7.80	19.88	7.94	19.81	8.25
	-11	21.77	6.92	21.38	7.29	21.04	7.58	20.88	7.80	20.72	7.94	20.58	8.25
	-10	22.24	6.92	21.80	7.29	21.49	7.58	21.28	7.81	21.15	7.96	20.97	8.25
	-9	22.72	6.92	22.33	7.29	22.08	7.58	21.91	7.80	21.78	7.94	21.62	8.25
	-7	23.68	6.92	23.38	7.29	23.26	7.58	23.17	7.80	23.05	7.94	22.92	8.25
	-6	24.16	6.92	23.91	7.29	23.84	7.58	23.80	7.80	23.69	7.94	23.57	8.25
	-5	24.64	6.92	24.43	7.29	24.43	7.58	24.43	7.81	24.32	7.96	24.23	8.25
	-3	26.11	6.83	25.90	7.16	25.82	7.45	25.77	7.63	25.67	7.77	25.61	7.85
	-1	27.58	6.73	27.37	7.03	27.20	7.31	27.11	7.46	27.01	7.60	26.99	7.44
	0	28.32	6.68	28.10	6.96	27.89	7.24	27.78	7.37	27.69	7.51	27.69	7.24
	1	29.09	6.72	28.88	6.99	28.71	7.20	28.54	7.26	28.44	7.32	28.42	7.00
	3	30.64	6.77	30.43	7.04	30.35	7.12	30.05	7.04	29.94	6.93	29.88	6.54
	5	32.19	6.82	31.99	7.10	31.99	7.03	31.56	6.82	31.45	6.55	31.34	6.07
	6	32.90	6.82	32.70	7.10	32.45	6.89	32.25	6.68	32.12	6.41	31.98	5.92
	7	33.62	6.82	33.42	7.03	33.29	6.79	32.95	6.58	32.80	6.31	32.63	5.82
	9	35.06	6.82	34.85	6.89	34.59	6.58	34.33	6.38	34.14	6.10	33.92	5.62
	10	35.78	6.82	35.57	6.82	35.24	6.48	35.02	6.28	34.82	6.00	34.56	5.52
	11	36.06	6.81	35.87	6.74	35.54	6.38	35.37	6.18	35.20	5.91	34.89	5.43
	14	36.90	6.77	36.77	6.50	36.45	6.09	36.41	5.89	36.37	5.66	35.87	5.18
	15	37.18	6.76	37.07	6.41	36.75	6.00	36.75	5.79	36.75	5.58	36.20	5.10

RAS-10FSXNME

	To/ Ti	16		18		20		21		22		24	
		CAP	IPT	CAP	IPT	CAP	IPT	CAP	IPT	CAP	IPT	CAP	IPT
100%	-20	17.41	6.81	17.20	7.17	16.80	7.46	16.72	7.68	16.67	7.81	16.67	8.12
	-17	18.54	6.87	18.34	7.24	17.93	7.54	17.90	7.75	17.75	7.89	17.75	8.20
	-15	19.29	6.92	19.09	7.29	18.68	7.58	18.68	7.81	18.48	7.96	18.48	8.25
	-13	20.22	6.92	19.92	7.29	19.56	7.58	19.47	7.80	19.30	7.94	19.23	8.25
	-11	21.14	6.92	20.75	7.29	20.43	7.58	20.27	7.80	20.12	7.94	19.99	8.25
	-10	21.60	6.92	21.17	7.29	20.87	7.58	20.66	7.81	20.53	7.96	20.36	8.25
	-9	22.06	6.92	21.68	7.29	21.44	7.58	21.28	7.80	21.15	7.94	20.99	8.25
	-7	22.99	6.92	22.70	7.29	22.58	7.58	22.50	7.80	22.38	7.94	22.26	8.25
	-6	23.46	6.92	23.21	7.29	23.15	7.58	23.11	7.80	23.00	7.94	22.89	8.25
	-5	23.92	6.92	23.72	7.29	23.72	7.58	23.72	7.81	23.61	7.96	23.52	8.25
	-3	25.35	6.83	25.15	7.16	25.07	7.45	25.02	7.63	24.92	7.77	24.86	7.85
	-1	26.78	6.73	26.57	7.03	26.41	7.31	26.32	7.46	26.23	7.60	26.21	7.44
	0	27.49	6.68	27.28	6.96	27.08	7.24	26.97	7.37	26.88	7.51	26.88	7.24
	1	28.24	6.72	28.04	6.99	27.88	7.20	27.71	7.26	27.61	7.32	27.59	7.00
	3	29.75	6.77	29.55	7.04	29.47	7.12	29.17	7.04	29.07	6.93	29.01	6.54
	5	31.25	6.82	31.05	7.10	31.05	7.03	30.64	6.82	30.53	6.55	30.42	6.07
	6	31.95	6.82	31.75	7.10	31.50	6.89	31.32	6.68	31.19	6.41	31.05	5.92
	7	32.64	6.82	32.45	7.03	32.32	6.79	31.99	6.58	31.84	6.31	31.68	5.82
	9	34.04	6.82	33.84	6.89	33.58	6.58	33.33	6.38	33.15	6.10	32.93	5.62
	10	34.73	6.82	34.53	6.82	34.21	6.48	34.00	6.28	33.80	6.00	33.56	5.52
	11	35.01	6.81	34.82	6.74	34.51	6.38	34.34	6.18	34.18	5.91	33.88	5.43
	14	35.82	6.77	35.69	6.50	35.39	6.09	35.35	5.89	35.31	5.66	34.83	5.18
	15	36.09	6.76	35.99	6.41	35.68	6.00	35.68	5.79	35.68	5.58	35.15	5.10
90%	-20	17.41	5.92	17.20	6.24	16.80	6.49	16.72	6.68	16.67	6.80	16.67	7.06
	-17	18.54	5.98	18.34	6.30	17.93	6.56	17.90	6.75	17.75	6.86	17.75	7.13
	-15	19.29	6.02	19.09	6.34	18.68	6.60	18.68	6.80	18.48	6.92	18.48	7.17
	-13	20.22	6.02	19.92	6.34	19.56	6.60	19.47	6.79	19.30	6.91	19.23	7.18
	-11	21.14	6.02	20.75	6.34	20.43	6.60	20.27	6.79	20.12	6.91	19.99	7.18
	-10	21.60	6.02	21.17	6.34	20.87	6.60	20.66	6.80	20.53	6.92	20.36	7.17
	-9	22.06	6.02	21.68	6.34	21.44	6.60	21.28	6.79	21.15	6.91	20.99	7.18
	-7	22.99	6.02	22.70	6.34	22.58	6.60	22.50	6.79	22.38	6.91	22.26	7.18
	-6	23.46	6.02	23.21	6.34	23.15	6.60	23.11	6.79	23.00	6.91	22.89	7.18
	-5	23.92	6.02	23.72	6.34	23.72	6.60	23.72	6.80	23.61	6.92	23.52	7.17
	-3	25.35	5.94	25.15	6.23	25.07	6.48	25.02	6.64	24.92	6.76	24.86	6.83
	-1	26.78	5.86	26.57	6.11	26.41	6.36	26.32	6.49	26.23	6.61	24.93	6.47
	0	27.49	5.82	27.28	6.06	27.08	6.30	26.97	6.41	26.88	6.53	24.93	6.30
	1	28.24	5.84	28.04	6.08	27.88	6.26	27.71	6.32	26.91	6.37	24.93	6.09
	3	29.75	5.89	29.45	6.13	28.49	6.19	27.88	6.13	26.91	6.03	24.93	5.69
	5	30.15	5.93	29.45	6.18	28.49	6.12	27.88	5.93	26.91	5.70	24.93	5.28
	6	30.15	5.93	29.45	6.18	28.49	6.00	27.88	5.82	26.91	5.58	24.93	5.15
	7	30.15	5.94	29.45	6.11	28.49	5.91	27.88	5.73	26.91	5.49	24.93	5.07
	9	30.87	5.94	30.04	6.00	28.76	5.72	28.01	5.55	26.91	5.31	24.93	4.89
	10	31.23	5.93	30.33	5.93	28.89	5.63	28.08	5.46	26.91	5.22	24.93	4.80
	11	31.39	5.92	30.38	5.86	28.89	5.55	28.08	5.37	26.91	5.14	24.93	4.73
	14	31.88	5.89	30.55	5.65	28.89	5.30	28.08	5.12	26.91	4.93	24.93	4.51
	15	32.04	5.88	30.60	5.58	28.89	5.22	28.08	5.04	26.91	4.85	24.93	4.44
80%	-20	17.41	5.24	17.20	5.52	16.80	5.75	16.72	5.91	16.67	6.01	16.67	6.25
	-17	18.54	5.29	18.34	5.57	17.93	5.80	17.90	5.97	17.75	6.07	17.75	6.31
	-15	19.29	5.33	19.09	5.61	18.68	5.84	18.68	6.02	18.48	6.13	18.48	6.35
	-13	20.22	5.33	19.92	5.61	19.56	5.84	19.47	6.01	19.30	6.11	19.23	6.35
	-11	21.14	5.33	20.75	5.61	20.43	5.84	20.27	6.01	20.12	6.11	19.99	6.35
	-10	21.60	5.33	21.17	5.61	20.87	5.84	20.66	6.02	20.53	6.13	20.36	6.35
	-9	22.06	5.33	21.68	5.61	21.44	5.84	21.28	6.01	21.15	6.11	20.99	6.35
	-7	22.99	5.33	22.70	5.61	22.58	5.84	22.50	6.01	22.38	6.11	22.16	6.35
	-6	23.46	5.33	23.21	5.61	23.15	5.84	23.11	6.01	23.00	6.11	22.16	6.35
	-5	23.92	5.33	23.72	5.61	23.72	5.84	23.72	6.02	23.61	6.13	22.16	6.35
	-3	25.35	5.26	25.15	5.51	25.07	5.73	24.78	5.88	23.92	5.98	22.16	6.04
	-1	26.78	5.19	26.18	5.41	25.32	5.63	24.78	5.74	23.92	5.85	22.16	5.73
	0	26.80	5.15	26.18	5.36	25.32	5.57	24.78	5.68	23.92	5.78	22.16	5.57
	1	26.80	5.17	26.18	5.38	25.32	5.54	24.78	5.59	23.92	5.64	22.16	5.39
	3	26.80	5.21	26.18	5.42	25.32	5.48	24.78	5.42	23.92	5.34	22.16	5.03
	5	26.80	5.25	26.18	5.47	25.32	5.41	24.78	5.25	23.92	5.04	22.16	4.67
	6	26.80	5.25	26.18	5.47	25.32	5.31	24.78	5.15	23.92	4.94	22.16	4.56
	7	26.80	5.25	26.18	5.41	25.32	5.23	24.78	5.07	23.92	4.86	22.16	4.48
	9	27.44	5.25	26.70	5.31	25.56	5.07	24.90	4.91	23.92	4.70	22.16	4.33
	10	27.76	5.25	26.96	5.25	25.68	4.99	24.96	4.83	23.92	4.62	22.16	4.25
	11	27.90	5.24	27.01	5.19	25.68	4.91	24.96	4.76	23.92	4.55	22.16	4.18
	14	28.34	5.21	27.15	5.00	25.68	4.69	24.96	4.53	23.92	4.36	22.16	3.99
	15	28.48	5.20	27.20	4.94	25.68	4.62	24.96	4.46	23.92	4.30	22.16	3.93

RAS-10FSXNME

	To/ Ti	16		18		20		21		22		24	
		CAP	IPT	CAP	IPT	CAP	IPT	CAP	IPT	CAP	IPT	CAP	IPT
70%	-20	17.41	4.49	17.20	4.73	16.80	4.93	16.72	5.07	16.67	5.15	16.67	5.36
	-17	18.54	4.54	18.34	4.78	17.93	4.97	17.90	5.12	17.75	5.21	17.75	5.41
	-15	19.29	4.57	19.09	4.81	18.68	5.00	18.68	5.16	18.48	5.25	18.48	5.44
	-13	20.22	4.56	19.92	4.81	19.56	5.01	19.47	5.15	19.30	5.24	19.23	5.45
	-11	21.14	4.56	20.75	4.81	20.43	5.01	20.27	5.15	20.12	5.24	19.39	5.45
	-10	21.60	4.57	21.17	4.81	20.87	5.00	20.66	5.16	20.53	5.25	19.39	5.44
	-9	22.06	4.56	21.68	4.81	21.44	5.01	21.28	5.15	20.93	5.24	19.39	5.45
	-7	22.99	4.56	22.70	4.81	22.16	5.01	21.68	5.15	20.93	5.24	19.39	5.45
	-6	23.45	4.56	22.91	4.81	22.16	5.01	21.68	5.15	20.93	5.24	19.39	5.45
	-5	23.45	4.57	22.91	4.81	22.16	5.00	21.68	5.16	20.93	5.25	19.39	5.44
	-3	23.45	4.50	22.91	4.72	22.16	4.91	21.68	5.04	20.93	5.13	19.39	5.18
	-1	23.45	4.44	22.91	4.64	22.16	4.82	21.68	4.92	20.93	5.02	19.39	4.91
	0	23.45	4.41	22.91	4.60	22.16	4.78	21.68	4.87	20.93	4.96	19.39	4.78
	1	23.45	4.43	22.91	4.61	22.16	4.75	21.68	4.79	20.93	4.83	19.39	4.62
	3	23.45	4.47	22.91	4.65	22.16	4.70	21.68	4.65	20.93	4.58	19.39	4.31
	5	23.45	4.50	22.91	4.69	22.16	4.64	21.68	4.50	20.93	4.32	19.39	4.01
	6	23.45	4.50	22.91	4.69	22.16	4.55	21.68	4.41	20.93	4.23	19.39	3.91
	7	23.45	4.50	22.91	4.64	22.16	4.48	21.68	4.35	20.93	4.16	19.39	3.84
	9	24.01	4.50	23.36	4.55	22.37	4.34	21.79	4.21	20.93	4.03	19.39	3.71
	10	24.29	4.50	23.59	4.50	22.47	4.27	21.84	4.14	20.93	3.96	19.39	3.64
	11	24.42	4.49	23.63	4.45	22.47	4.21	21.84	4.08	20.93	3.90	19.39	3.59
	14	24.79	4.47	23.76	4.29	22.47	4.02	21.84	3.89	20.93	3.74	19.39	3.42
	15	24.92	4.46	23.80	4.23	22.47	3.96	21.84	3.82	20.93	3.68	19.39	3.37
60%	-20	17.41	3.88	17.20	4.09	16.80	4.25	16.72	4.38	16.67	4.45	16.62	4.63
	-17	18.54	3.92	18.34	4.13	17.93	4.30	17.90	4.42	17.75	4.50	16.62	4.67
	-15	19.29	3.94	19.09	4.15	18.68	4.32	18.59	4.45	17.94	4.54	16.62	4.70
	-13	20.10	3.94	19.64	4.15	18.99	4.32	18.59	4.45	17.94	4.52	16.62	4.70
	-11	20.10	3.94	19.64	4.15	18.99	4.32	18.59	4.45	17.94	4.52	16.62	4.70
	-10	20.10	3.94	19.64	4.15	18.99	4.32	18.59	4.45	17.94	4.54	16.62	4.70
	-9	20.10	3.94	19.64	4.15	18.99	4.32	18.59	4.45	17.94	4.52	16.62	4.70
	-7	20.10	3.94	19.64	4.15	18.99	4.32	18.59	4.45	17.94	4.52	16.62	4.70
	-6	20.10	3.94	19.64	4.15	18.99	4.32	18.59	4.45	17.94	4.52	16.62	4.70
	-5	20.10	3.94	19.64	4.15	18.99	4.32	18.59	4.45	17.94	4.54	16.62	4.70
	-3	20.10	3.89	19.64	4.08	18.99	4.24	18.59	4.35	17.94	4.43	16.62	4.47
	-1	20.10	3.84	19.64	4.01	18.99	4.17	18.59	4.25	17.94	4.33	16.62	4.24
	0	20.10	3.81	19.64	3.97	18.99	4.13	18.59	4.20	17.94	4.28	16.62	4.13
	1	20.10	3.83	19.64	3.98	18.99	4.10	18.59	4.14	17.94	4.17	16.62	3.99
	3	20.10	3.86	19.64	4.01	18.99	4.06	18.59	4.01	17.94	3.95	16.62	3.73
	5	20.10	3.89	19.64	4.05	18.99	4.01	18.59	3.89	17.94	3.73	16.62	3.46
	6	20.10	3.89	19.64	4.05	18.99	3.93	18.59	3.81	17.94	3.66	16.62	3.38
	7	20.10	3.89	19.64	4.01	18.99	3.87	18.59	3.75	17.94	3.60	16.62	3.32
	9	20.58	3.89	20.03	3.93	19.17	3.75	18.68	3.63	17.94	3.48	16.62	3.20
	10	20.82	3.89	20.22	3.89	19.26	3.69	18.72	3.58	17.94	3.42	16.62	3.14
	11	20.93	3.88	20.26	3.84	19.26	3.64	18.72	3.52	17.94	3.37	16.62	3.10
	14	21.25	3.86	20.36	3.70	19.26	3.47	18.72	3.36	17.94	3.23	16.62	2.95
	15	21.36	3.85	20.40	3.66	19.26	3.42	18.72	3.30	17.94	3.18	16.62	2.91
50%	-20	16.75	3.20	16.36	3.37	15.83	3.51	15.49	3.61	14.95	3.67	13.85	3.82
	-17	16.75	3.23	16.36	3.40	15.83	3.54	15.49	3.64	14.95	3.71	13.85	3.85
	-15	16.75	3.25	16.36	3.42	15.83	3.56	15.49	3.67	14.95	3.74	13.85	3.88
	-13	16.75	3.25	16.36	3.42	15.83	3.56	15.49	3.67	14.95	3.73	13.85	3.88
	-11	16.75	3.25	16.36	3.42	15.83	3.56	15.49	3.67	14.95	3.73	13.85	3.88
	-10	16.75	3.25	16.36	3.42	15.83	3.56	15.49	3.67	14.95	3.74	13.85	3.88
	-9	16.75	3.25	16.36	3.42	15.83	3.56	15.49	3.67	14.95	3.73	13.85	3.88
	-7	16.75	3.25	16.36	3.42	15.83	3.56	15.49	3.67	14.95	3.73	13.85	3.88
	-6	16.75	3.25	16.36	3.42	15.83	3.56	15.49	3.67	14.95	3.73	13.85	3.88
	-5	16.75	3.25	16.36	3.42	15.83	3.56	15.49	3.67	14.95	3.74	13.85	3.88
	-3	16.75	3.21	16.36	3.36	15.83	3.50	15.49	3.59	14.95	3.65	13.85	3.69
	-1	16.75	3.16	16.36	3.30	15.83	3.43	15.49	3.51	14.95	3.57	13.85	3.50
	0	16.75	3.14	16.36	3.27	15.83	3.40	15.49	3.47	14.95	3.53	13.85	3.40
	1	16.75	3.16	16.36	3.29	15.83	3.38	15.49	3.41	14.95	3.44	13.85	3.29
	3	16.75	3.18	16.36	3.31	15.83	3.34	15.49	3.31	14.95	3.26	13.85	3.07
	5	16.75	3.21	16.36	3.34	15.83	3.30	15.49	3.21	14.95	3.08	13.85	2.85
	6	16.75	3.21	16.36	3.34	15.83	3.24	15.49	3.14	14.95	3.01	13.85	2.78
	7	16.75	3.21	16.36	3.30	15.83	3.19	15.49	3.09	14.95	2.97	13.85	2.74
	9	17.15	3.21	16.69	3.24	15.98	3.09	15.56	3.00	14.95	2.87	13.85	2.64
	10	17.35	3.21	16.85	3.21	16.05	3.04	15.60	2.95	14.95	2.82	13.85	2.59
	11	17.44	3.20	16.88	3.17	16.05	3.00	15.60	2.90	14.95	2.78	13.85	2.55
	14	17.71	3.18	16.97	3.05	16.05	2.86	15.60	2.77	14.95	2.66	13.85	2.44
	15	17.80	3.18	17.00	3.01	16.05	2.82	15.60	2.72	14.95	2.62	13.85	2.40

◆ RAS-12FSXNME

	To/ Ti	16		18		20		21		22		24	
		CAP	IPT	CAP	IPT	CAP	IPT	CAP	IPT	CAP	IPT	CAP	IPT
130%	-20	21.56	7.47	21.30	7.79	20.80	8.25	20.70	8.40	20.63	8.63	20.63	8.86
	-17	22.96	7.54	22.70	7.87	22.20	8.33	22.16	8.48	21.98	8.71	21.98	8.95
	-15	23.89	7.59	23.64	7.92	23.13	8.38	23.13	8.54	22.88	8.77	22.88	9.00
	-13	25.03	7.59	24.67	7.92	24.21	8.38	24.11	8.54	23.90	8.77	23.81	9.00
	-11	26.17	7.59	25.69	7.92	25.29	8.38	25.09	8.54	24.91	8.77	24.74	9.00
	-10	26.74	7.59	26.21	7.92	25.83	8.38	25.58	8.54	25.42	8.77	25.21	9.00
	-9	27.31	7.59	26.84	7.92	26.54	8.38	26.34	8.54	26.18	8.77	25.99	9.00
	-7	28.47	7.59	28.10	7.92	27.96	8.38	27.86	8.54	27.71	8.77	27.56	9.00
	-6	29.04	7.59	28.74	7.92	28.66	8.38	28.61	8.54	28.47	8.77	28.34	9.00
	-5	29.62	7.59	29.37	7.92	29.37	8.38	29.37	8.54	29.23	8.77	29.12	9.00
	-3	31.39	7.66	31.13	7.98	31.03	8.44	30.98	8.63	30.85	8.83	30.78	8.97
	-1	33.16	7.73	32.90	8.04	32.70	8.51	32.59	8.72	32.47	8.89	32.45	8.94
	0	34.04	7.76	33.78	8.07	33.53	8.54	33.39	8.77	33.28	8.93	33.28	8.93
	1	34.97	7.82	34.71	8.16	34.51	8.58	34.30	8.75	34.18	8.82	34.16	8.67
	3	36.83	7.95	36.58	8.35	36.48	8.68	36.12	8.72	35.99	8.60	35.91	8.16
	5	38.69	8.07	38.45	8.54	38.45	8.77	37.94	8.69	37.80	8.38	37.67	7.65
	6	39.55	8.07	39.31	8.46	39.00	8.69	38.77	8.46	38.61	8.07	38.44	7.39
	7	40.41	8.09	40.17	8.46	40.01	8.52	39.60	8.29	39.42	7.92	39.22	7.26
	9	42.14	8.13	41.89	8.46	41.58	8.17	41.27	7.94	41.04	7.62	40.77	7.00
	10	43.00	8.15	42.75	8.46	42.36	7.99	42.10	7.76	41.85	7.47	41.55	6.87
	11	43.34	8.20	43.11	8.35	42.72	7.87	42.52	7.63	42.32	7.35	41.94	6.75
	14	44.35	8.34	44.19	8.03	43.82	7.51	43.76	7.25	43.71	6.99	43.12	6.38
	15	44.69	8.38	44.55	7.92	44.18	7.39	44.18	7.12	44.18	6.87	43.51	6.26
120%	-20	21.46	7.70	21.20	8.04	20.70	8.51	20.60	8.67	20.53	8.90	20.53	9.14
	-17	22.85	7.78	22.59	8.11	22.09	8.59	22.05	8.75	21.88	8.99	21.88	9.23
	-15	23.77	7.83	23.53	8.17	23.02	8.65	23.02	8.81	22.77	9.05	22.77	9.29
	-13	24.91	7.83	24.55	8.17	24.09	8.65	24.00	8.81	23.78	9.05	23.70	9.29
	-11	26.04	7.83	25.57	8.17	25.17	8.65	24.97	8.81	24.79	9.05	24.62	9.29
	-10	26.61	7.83	26.08	8.17	25.71	8.65	25.46	8.81	25.30	9.05	25.09	9.29
	-9	27.18	7.83	26.71	8.17	26.41	8.65	26.21	8.81	26.06	9.05	25.87	9.29
	-7	28.33	7.83	27.97	8.17	27.82	8.65	27.72	8.81	27.57	9.05	27.42	9.29
	-6	28.90	7.83	28.60	8.17	28.52	8.65	28.47	8.81	28.33	9.05	28.20	9.29
	-5	29.48	7.83	29.23	8.17	29.23	8.65	29.23	8.81	29.09	9.05	28.98	9.29
	-3	31.24	7.90	30.98	8.23	30.88	8.71	30.83	8.90	30.70	9.11	30.64	9.26
	-1	33.00	7.97	32.74	8.29	32.54	8.77	32.43	9.00	32.31	9.18	32.29	9.22
	0	33.88	8.01	33.62	8.33	33.37	8.81	33.23	9.05	33.12	9.21	33.12	9.21
	1	34.80	8.07	34.55	8.42	34.35	8.85	34.14	9.03	34.02	9.10	33.99	8.94
	3	36.65	8.20	36.41	8.61	36.31	8.95	35.95	9.00	35.82	8.87	35.74	8.42
	5	38.50	8.33	38.26	8.81	38.26	9.05	37.76	8.97	37.62	8.65	37.49	7.89
	6	39.36	8.33	39.12	8.73	38.81	8.97	38.58	8.73	38.43	8.33	38.26	7.62
	7	40.22	8.35	39.98	8.73	39.82	8.79	39.41	8.55	39.23	8.17	39.03	7.49
	9	41.94	8.39	41.69	8.73	41.38	8.43	41.07	8.19	40.84	7.86	40.58	7.22
	10	42.80	8.41	42.55	8.73	42.16	8.25	41.90	8.01	41.65	7.71	41.35	7.09
	11	43.13	8.45	42.91	8.61	42.52	8.12	42.31	7.87	42.11	7.59	41.74	6.96
	14	44.14	8.60	43.98	8.28	43.60	7.75	43.55	7.48	43.50	7.21	42.91	6.58
	15	44.47	8.65	44.34	8.17	43.97	7.62	43.97	7.35	43.97	7.09	43.30	6.45
110%	-20	21.35	7.86	21.09	8.20	20.60	8.68	20.50	8.84	20.44	9.08	20.44	9.32
	-17	22.74	7.94	22.48	8.28	21.98	8.77	21.94	8.93	21.77	9.17	21.77	9.42
	-15	23.66	7.99	23.41	8.33	22.91	8.82	22.91	8.99	22.66	9.23	22.66	9.48
	-13	24.79	7.99	24.43	8.33	23.98	8.82	23.88	8.99	23.67	9.23	23.58	9.48
	-11	25.92	7.99	25.45	8.33	25.05	8.82	24.85	8.99	24.67	9.23	24.51	9.48
	-10	26.48	7.99	25.96	8.33	25.59	8.82	25.34	8.99	25.17	9.23	24.97	9.48
	-9	27.05	7.99	26.58	8.33	26.29	8.82	26.09	8.99	25.93	9.23	25.74	9.48
	-7	28.19	7.99	27.83	8.33	27.69	8.82	27.59	8.99	27.44	9.23	27.29	9.48
	-6	28.76	7.99	28.46	8.33	28.39	8.82	28.34	8.99	28.20	9.23	28.07	9.48
	-5	29.33	7.99	29.09	8.33	29.09	8.82	29.09	8.99	28.95	9.23	28.84	9.48
	-3	31.09	8.06	30.83	8.40	30.74	8.89	30.68	9.08	30.56	9.30	30.49	9.44
	-1	32.84	8.13	32.58	8.46	32.38	8.95	32.28	9.18	32.16	9.36	32.14	9.41
	0	33.71	8.17	33.45	8.50	33.21	8.99	33.07	9.23	32.96	9.40	32.96	9.40
	1	34.63	8.24	34.38	8.59	34.18	9.04	33.97	9.22	33.86	9.28	33.83	9.13
	3	36.47	8.37	36.23	8.79	36.13	9.13	35.77	9.18	35.65	9.05	35.57	8.59
	5	38.32	8.50	38.08	8.99	38.08	9.23	37.57	9.15	37.44	8.82	37.31	8.06
	6	39.17	8.50	38.93	8.90	38.63	9.15	38.40	8.90	38.24	8.50	38.07	7.78
	7	40.03	8.52	39.78	8.90	39.63	8.97	39.22	8.72	39.04	8.34	38.84	7.64
	9	41.74	8.56	41.49	8.90	41.18	8.60	40.87	8.35	40.65	8.02	40.38	7.37
	10	42.59	8.58	42.34	8.90	41.95	8.41	41.69	8.17	41.45	7.87	41.15	7.23
	11	42.92	8.63	42.70	8.79	42.31	8.29	42.11	8.04	41.91	7.74	41.54	7.10
	14	43.93	8.77	43.77	8.45	43.39	7.90	43.34	7.63	43.29	7.36	42.71	6.71
	15	44.26	8.82	44.13	8.33	43.75	7.78	43.75	7.50	43.75	7.23	43.10	6.58

RAS-12FSXNME

	To/ Ti	16		18		20		21		22		24	
		CAP	IPT	CAP	IPT	CAP	IPT	CAP	IPT	CAP	IPT	CAP	IPT
100%	-20	20.73	7.86	20.48	8.20	20.00	8.68	19.90	8.84	19.84	9.08	19.84	9.32
	-17	22.07	7.94	21.83	8.28	21.34	8.77	21.30	8.93	21.14	9.17	21.14	9.42
	-15	22.97	7.99	22.73	8.33	22.24	8.82	22.24	8.99	22.00	9.23	22.00	9.48
	-13	24.07	7.99	23.72	8.33	23.28	8.82	23.18	8.99	22.98	9.23	22.90	9.48
	-11	25.16	7.99	24.71	8.33	24.32	8.82	24.13	8.99	23.95	9.23	23.79	9.48
	-10	25.71	7.99	25.20	8.33	24.84	8.82	24.60	8.99	24.44	9.23	24.24	9.48
	-9	26.26	7.99	25.81	8.33	25.52	8.82	25.33	8.99	25.17	9.23	24.99	9.48
	-7	27.37	7.99	27.02	8.33	26.88	8.82	26.78	8.99	26.64	9.23	26.50	9.48
	-6	27.93	7.99	27.63	8.33	27.56	8.82	27.51	8.99	27.38	9.23	27.25	9.48
	-5	28.48	7.99	28.24	8.33	28.24	8.82	28.24	8.99	28.11	9.23	28.00	9.48
	-3	30.18	8.06	29.94	8.40	29.84	8.89	29.79	9.08	29.67	9.30	29.60	9.44
	-1	31.88	8.13	31.63	8.46	31.44	8.95	31.34	9.18	31.22	9.36	31.20	9.41
	0	32.73	8.17	32.48	8.50	32.24	8.99	32.11	9.23	32.00	9.40	32.00	9.40
	1	33.62	8.24	33.38	8.59	33.19	9.04	32.98	9.22	32.87	9.28	32.84	9.13
	3	35.41	8.37	35.17	8.79	35.08	9.13	34.73	9.18	34.61	9.05	34.53	8.59
	5	37.20	8.50	36.97	8.99	36.97	9.23	36.48	9.15	36.35	8.82	36.22	8.06
	6	38.03	8.50	37.80	8.90	37.50	9.15	37.28	8.90	37.13	8.50	36.97	7.78
	7	38.86	8.52	38.63	8.90	38.47	8.97	38.08	8.72	37.91	8.34	37.71	7.64
	9	40.52	8.56	40.28	8.90	39.98	8.60	39.68	8.35	39.46	8.02	39.20	7.37
	10	41.35	8.58	41.11	8.90	40.73	8.41	40.48	8.17	40.24	7.87	39.95	7.23
	11	41.67	8.63	41.46	8.79	41.08	8.29	40.88	8.04	40.69	7.74	40.33	7.10
	14	42.65	8.77	42.49	8.45	42.13	7.90	42.08	7.63	42.03	7.36	41.46	6.71
	15	42.97	8.82	42.84	8.33	42.48	7.78	42.48	7.50	42.48	7.23	41.84	6.58
90%	-20	20.73	6.84	20.48	7.13	20.00	7.55	19.90	7.69	19.84	7.90	19.84	8.11
	-17	22.07	6.91	21.83	7.20	21.34	7.63	21.30	7.77	21.14	7.98	21.14	8.19
	-15	22.97	6.95	22.73	7.25	22.24	7.68	22.24	7.82	22.00	8.03	22.00	8.24
	-13	24.07	6.95	23.72	7.25	23.28	7.68	23.18	7.82	22.98	8.03	22.90	8.24
	-11	25.16	6.95	24.71	7.25	24.32	7.68	24.13	7.82	23.95	8.03	23.79	8.24
	-10	25.71	6.95	25.20	7.25	24.84	7.68	24.60	7.82	24.44	8.03	24.24	8.24
	-9	26.26	6.95	25.81	7.25	25.52	7.68	25.33	7.82	25.17	8.03	24.99	8.24
	-7	27.37	6.95	27.02	7.25	26.88	7.68	26.78	7.82	26.64	8.03	26.50	8.24
	-6	27.93	6.95	27.63	7.25	27.56	7.68	27.51	7.82	27.38	8.03	27.25	8.24
	-5	28.48	6.95	28.24	7.25	28.24	7.68	28.24	7.82	28.11	8.03	28.00	8.24
	-3	30.18	7.01	29.94	7.31	29.84	7.73	29.79	7.90	29.67	8.09	29.60	8.22
	-1	31.88	7.08	31.63	7.36	31.44	7.79	31.34	7.99	31.22	8.15	31.20	8.19
	0	32.73	7.11	32.48	7.39	32.24	7.82	32.11	8.03	32.00	8.17	32.00	8.17
	1	33.62	7.16	33.38	7.48	33.19	7.86	32.98	8.02	32.87	8.07	32.84	7.94
	3	34.97	7.28	34.76	7.65	34.63	7.95	34.27	7.99	34.12	7.88	33.94	7.47
	5	34.97	7.39	34.76	7.82	34.63	8.03	34.27	7.96	34.12	7.68	33.94	7.01
	6	34.97	7.39	34.76	7.75	34.63	7.96	34.27	7.75	34.12	7.39	33.94	6.77
	7	34.97	7.41	34.76	7.75	34.63	7.80	34.27	7.59	34.12	7.26	33.94	6.65
	9	36.47	7.45	36.25	7.75	35.98	7.48	35.71	7.27	35.52	6.98	35.28	6.41
	10	37.22	7.46	37.00	7.75	36.66	7.32	36.43	7.11	36.22	6.84	35.96	6.29
	11	37.51	7.51	37.31	7.65	36.97	7.21	36.79	6.99	36.62	6.73	36.30	6.18
	14	38.38	7.63	38.24	7.35	37.92	6.88	37.87	6.64	37.83	6.40	37.32	5.84
	15	38.67	7.68	38.56	7.25	38.23	6.77	38.23	6.52	38.23	6.29	37.66	5.73
80%	-20	20.73	6.05	20.48	6.31	20.00	6.68	19.90	6.81	19.84	6.99	19.84	7.18
	-17	22.07	6.11	21.83	6.38	21.34	6.75	21.30	6.88	21.14	7.06	21.14	7.25
	-15	22.97	6.15	22.73	6.42	22.24	6.79	22.24	6.92	22.00	7.11	22.00	7.30
	-13	24.07	6.15	23.72	6.42	23.28	6.79	23.18	6.92	22.98	7.11	22.90	7.30
	-11	25.16	6.15	24.71	6.42	24.32	6.79	24.13	6.92	23.95	7.11	23.79	7.30
	-10	25.71	6.15	25.20	6.42	24.84	6.79	24.60	6.92	24.44	7.11	24.24	7.30
	-9	26.26	6.15	25.81	6.42	25.52	6.79	25.33	6.92	25.17	7.11	24.99	7.30
	-7	27.37	6.15	27.02	6.42	26.88	6.79	26.78	6.92	26.64	7.11	26.50	7.30
	-6	27.93	6.15	27.63	6.42	27.56	6.79	27.51	6.92	27.38	7.11	27.25	7.30
	-5	28.48	6.15	28.24	6.42	28.24	6.79	28.24	6.92	28.11	7.11	28.00	7.30
	-3	30.18	6.21	29.94	6.47	29.84	6.84	29.79	7.00	29.67	7.16	29.60	7.27
	-1	31.09	6.26	30.90	6.52	30.78	6.89	30.46	7.07	30.32	7.21	30.17	7.25
	0	31.09	6.29	30.90	6.54	30.78	6.92	30.46	7.11	30.32	7.23	30.17	7.23
	1	31.09	6.34	30.90	6.62	30.78	6.96	30.46	7.10	30.32	7.15	30.17	7.03
	3	31.09	6.44	30.90	6.77	30.78	7.03	30.46	7.07	30.32	6.97	30.17	6.62
	5	31.09	6.54	30.90	6.92	30.78	7.11	30.46	7.05	30.32	6.79	30.17	6.20
	6	31.09	6.54	30.90	6.86	30.78	7.05	30.46	6.86	30.32	6.54	30.17	5.99
	7	31.09	6.56	30.90	6.86	30.78	6.90	30.46	6.72	30.32	6.42	30.17	5.88
	9	32.42	6.59	32.23	6.86	31.98	6.62	31.74	6.43	31.57	6.18	31.36	5.67
	10	33.08	6.61	32.89	6.86	32.58	6.48	32.38	6.29	32.19	6.06	31.96	5.57
	11	33.34	6.64	33.16	6.77	32.86	6.38	32.70	6.19	32.55	5.96	32.26	5.47
	14	34.12	6.76	34.00	6.50	33.70	6.09	33.66	5.88	33.63	5.67	33.17	5.17
	15	34.38	6.79	34.27	6.42	33.98	5.99	33.98	5.77	33.98	5.57	33.47	5.07

RAS-12FSXNME

	To/ Ti	16		18		20		21		22		24	
		CAP	IPT	CAP	IPT	CAP	IPT	CAP	IPT	CAP	IPT	CAP	IPT
70%	-20	20.73	5.19	20.48	5.41	20.00	5.73	19.90	5.84	19.84	5.99	19.84	6.15
	-17	22.07	5.24	21.83	5.46	21.34	5.79	21.30	5.89	21.14	6.05	21.14	6.21
	-15	22.97	5.27	22.73	5.50	22.24	5.82	22.24	5.93	22.00	6.09	22.00	6.25
	-13	24.07	5.27	23.72	5.50	23.28	5.82	23.18	5.93	22.98	6.09	22.90	6.25
	-11	25.16	5.27	24.71	5.50	24.32	5.82	24.13	5.93	23.95	6.09	23.79	6.25
	-10	25.71	5.27	25.20	5.50	24.84	5.82	24.60	5.93	24.44	6.09	24.24	6.25
	-9	26.26	5.27	25.81	5.50	25.52	5.82	25.33	5.93	25.17	6.09	24.99	6.25
	-7	27.20	5.27	27.02	5.50	26.88	5.82	26.66	5.93	26.53	6.09	26.40	6.25
	-6	27.20	5.27	27.04	5.50	26.93	5.82	26.66	5.93	26.53	6.09	26.40	6.25
	-5	27.20	5.27	27.04	5.50	26.93	5.82	26.66	5.93	26.53	6.09	26.40	6.25
	-3	27.20	5.32	27.04	5.54	26.93	5.87	26.66	6.00	26.53	6.14	26.40	6.23
	-1	27.20	5.37	27.04	5.59	26.93	5.91	26.66	6.06	26.53	6.18	26.40	6.21
	0	27.20	5.39	27.04	5.61	26.93	5.93	26.66	6.09	26.53	6.20	26.40	6.20
	1	27.20	5.44	27.04	5.67	26.93	5.96	26.66	6.08	26.53	6.13	26.40	6.02
	3	27.20	5.52	27.04	5.80	26.93	6.03	26.66	6.06	26.53	5.97	26.40	5.67
	5	27.20	5.61	27.04	5.93	26.93	6.09	26.66	6.04	26.53	5.82	26.40	5.32
	6	27.20	5.61	27.04	5.88	26.93	6.04	26.66	5.88	26.53	5.61	26.40	5.13
	7	27.20	5.62	27.04	5.88	26.93	5.92	26.66	5.76	26.53	5.50	26.40	5.04
	9	28.36	5.65	28.20	5.88	27.98	5.68	27.78	5.51	27.62	5.30	27.44	4.86
	10	28.95	5.66	28.78	5.88	28.51	5.55	28.34	5.39	28.17	5.19	27.97	4.77
	11	29.17	5.69	29.02	5.80	28.76	5.47	28.62	5.30	28.48	5.11	28.23	4.69
	14	29.85	5.79	29.75	5.58	29.49	5.22	29.46	5.04	29.42	4.86	29.02	4.43
	15	30.08	5.82	29.99	5.50	29.74	5.13	29.74	4.95	29.74	4.77	29.29	4.35
60%	-20	20.73	4.48	20.48	4.67	20.00	4.95	19.90	5.04	19.84	5.18	19.84	5.31
	-17	22.07	4.52	21.83	4.72	21.34	5.00	21.30	5.09	21.14	5.23	21.14	5.37
	-15	22.97	4.55	22.73	4.75	22.24	5.03	22.24	5.12	22.00	5.26	22.00	5.40
	-13	23.32	4.55	23.18	4.75	23.08	5.03	22.85	5.12	22.74	5.26	22.63	5.40
	-11	23.32	4.55	23.18	4.75	23.08	5.03	22.85	5.12	22.74	5.26	22.63	5.40
	-10	23.32	4.55	23.18	4.75	23.08	5.03	22.85	5.12	22.74	5.26	22.63	5.40
	-9	23.32	4.55	23.18	4.75	23.08	5.03	22.85	5.12	22.74	5.26	22.63	5.40
	-7	23.32	4.55	23.18	4.75	23.08	5.03	22.85	5.12	22.74	5.26	22.63	5.40
	-6	23.32	4.55	23.18	4.75	23.08	5.03	22.85	5.12	22.74	5.26	22.63	5.40
	-5	23.32	4.55	23.18	4.75	23.08	5.03	22.85	5.12	22.74	5.26	22.63	5.40
	-3	23.32	4.60	23.18	4.79	23.08	5.07	22.85	5.18	22.74	5.30	22.63	5.38
	-1	23.32	4.64	23.18	4.82	23.08	5.10	22.85	5.23	22.74	5.34	22.63	5.36
	0	23.32	4.66	23.18	4.84	23.08	5.12	22.85	5.26	22.74	5.36	22.63	5.36
	1	23.32	4.69	23.18	4.90	23.08	5.15	22.85	5.25	22.74	5.29	22.63	5.20
	3	23.32	4.77	23.18	5.01	23.08	5.21	22.85	5.23	22.74	5.16	22.63	4.90
	5	23.32	4.84	23.18	5.12	23.08	5.26	22.85	5.22	22.74	5.03	22.63	4.59
	6	23.32	4.84	23.18	5.08	23.08	5.22	22.85	5.08	22.74	4.84	22.63	4.43
	7	23.32	4.85	23.18	5.08	23.08	5.11	22.85	4.97	22.74	4.75	22.63	4.36
	9	24.31	4.88	24.17	5.08	23.99	4.90	23.81	4.76	23.68	4.57	23.52	4.20
	10	24.81	4.89	24.67	5.08	24.44	4.80	24.29	4.66	24.14	4.48	23.97	4.12
	11	25.00	4.92	24.87	5.01	24.65	4.72	24.53	4.58	24.41	4.41	24.20	4.05
	14	25.59	5.00	25.50	4.82	25.28	4.51	25.25	4.35	25.22	4.19	24.88	3.83
	15	25.78	5.03	25.70	4.75	25.49	4.43	25.49	4.27	25.49	4.12	25.10	3.75
50%	-20	19.43	3.69	19.31	3.85	19.24	4.08	19.04	4.16	18.95	4.27	18.86	4.38
	-17	19.43	3.73	19.31	3.89	19.24	4.12	19.04	4.20	18.95	4.31	18.86	4.43
	-15	19.43	3.76	19.31	3.92	19.24	4.15	19.04	4.22	18.95	4.34	18.86	4.45
	-13	19.43	3.76	19.31	3.92	19.24	4.15	19.04	4.22	18.95	4.34	18.86	4.45
	-11	19.43	3.76	19.31	3.92	19.24	4.15	19.04	4.22	18.95	4.34	18.86	4.45
	-10	19.43	3.76	19.31	3.92	19.24	4.15	19.04	4.22	18.95	4.34	18.86	4.45
	-9	19.43	3.76	19.31	3.92	19.24	4.15	19.04	4.22	18.95	4.34	18.86	4.45
	-7	19.43	3.76	19.31	3.92	19.24	4.15	19.04	4.22	18.95	4.34	18.86	4.45
	-6	19.43	3.76	19.31	3.92	19.24	4.15	19.04	4.22	18.95	4.34	18.86	4.45
	-5	19.43	3.76	19.31	3.92	19.24	4.15	19.04	4.22	18.95	4.34	18.86	4.45
	-3	19.43	3.79	19.31	3.95	19.24	4.18	19.04	4.27	18.95	4.37	18.86	4.44
	-1	19.43	3.82	19.31	3.98	19.24	4.21	19.04	4.32	18.95	4.40	18.86	4.42
	0	19.43	3.84	19.31	3.99	19.24	4.22	19.04	4.34	18.95	4.42	18.86	4.42
	1	19.43	3.87	19.31	4.04	19.24	4.25	19.04	4.33	18.95	4.36	18.86	4.29
	3	19.43	3.93	19.31	4.13	19.24	4.29	19.04	4.32	18.95	4.25	18.86	4.04
	5	19.43	3.99	19.31	4.22	19.24	4.34	19.04	4.30	18.95	4.15	18.86	3.79
	6	19.43	3.99	19.31	4.19	19.24	4.30	19.04	4.19	18.95	3.99	18.86	3.66
	7	19.43	4.00	19.31	4.19	19.24	4.21	19.04	4.10	18.95	3.92	18.86	3.59
	9	20.26	4.02	20.14	4.19	19.99	4.04	19.84	3.93	19.73	3.77	19.60	3.46
	10	20.68	4.03	20.56	4.19	20.37	3.95	20.24	3.84	20.12	3.70	19.98	3.40
	11	20.84	4.05	20.73	4.13	20.54	3.90	20.44	3.78	20.34	3.64	20.16	3.34
	14	21.32	4.12	21.25	3.97	21.07	3.72	21.04	3.59	21.02	3.46	20.73	3.16
	15	21.49	4.15	21.42	3.92	21.24	3.66	21.24	3.52	21.24	3.40	20.92	3.09

HITACHI

12. Troubleshooting

Index

11.1 On-screen displays during abnormal operation..... 120

11.2 Alarm codes 121

12.1 On-screen displays during abnormal operation

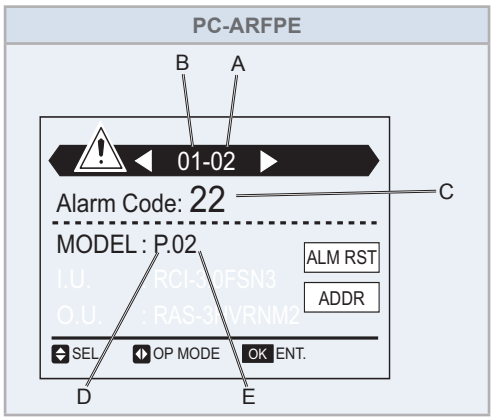

Abnormal operation can be produced due to the following reasons:

◆ Malfunction

If the RUN LED flickers for 2 seconds, there is a failure in the transmission between the Indoor Unit and the Remote Control Switch.

Possible causes are:

- Broken remote cable
- Contact failure in the remote control cable
- Defective IC or defective microcomputer

In any case, ask your retailer for service.

If the RUN LED flickers 5 times (5 seconds) with the unit number and the alarm code displayed, make a note of the alarm code (refer to the table below) and ask your retailer for service.

The RUN (red) indicator flashes

The ALARM indicator appears on the liquid crystal display.

The screen also displays the following items:

- A: indoor unit address (Abnormal Indoor Unit Number).
- B: Refrigerant cycle number (Abnormal Ref. Cycle Number).
- C: Alarm code.
- D: Model code. Abnormal operation can be produced due to the following reasons:

Model code	
Indication (P)	Model
H	Heat pump
P	Inverter
F	Multi (SET-FREE)
E	Other
L	KPI

- E: If there are various indoor units connected, the above mentioned information is shown for each one of them.

◆ Power supply failure

All displays disappear.

If the unit stops due to a power shortage, it will not start again, even though the power comes back on. Carry out the start-up operations again.

If the power failure lasts less than 2 seconds, the unit will start again automatically.

◆ Electrical noise

The displays can disappear from the screen and the unit can stop. This is because the microcomputer has been activated to protect the unit from electrical noise.

12.2 Alarm codes

Code	Category	Content of Abnormality	Leading Cause
01	Indoor Unit	Activation of Protection Device (Float Switch)	Activation of Float Switch (High Water Level in Drain Pan, Abnormality of Drain Pipe, Float Switch, or Drain Pan)
02	Outdoor Unit	Activation of Protection Device (High Pressure Cut)	Activation of PSH (Pipe Clogging, Excessive Refrigerant, Inert Gas Mixing)
03	Communication	Abnormal Communication between Indoor Units and Outdoor Units	Incorrect Wiring, Loose Terminals, Disconnected Communication Cable, Blowout of Fuse, Indoor Unit Power OFF
04		Abnormal Communication between Inverter PCB and Outdoor PCB	Inverter PCB -Outdoor PCB Communication Failure (Loose Connector, Wire Breaking, Blowout of Fuse)
05	Supply Phase	Abnormality of Power Supply Phases	Incorrect Power Supply, Connection to Reversed Phase, Open-Phase
06	Voltage	Abnormal Inverter Voltage	Outdoor Voltage Decrease, Insufficient Power Capacity
07	Cycle	Decrease in Discharge Gas Superheat	Excessive Refrigerant Charge, Failure of Thermistor, Incorrect Wiring, Incorrect Piping Connection, Expansion Valve Locking at Opened Position (Disconnect Connector)
08		Increase in Discharge Gas Temperature	Insufficient Refrigerant Charge, Pipe Clogging, Failure of Thermistor, Incorrect Wiring, Incorrect Piping Connection, Expansion Valve Locking at Closed Position (Disconnect Connector)
0A	Communication	Abnormal Communication between Outdoor Units	Incorrect Wiring, Breaking Wire, Loose Terminals
0b	Outdoor Unit	Incorrect Outdoor Unit Address Setting	Duplication of Address Setting for Outdoor Units (Sub Units) in Same Refrigerant Cycle Number
0C		Incorrect Outdoor Unit Main Unit Setting	Two (or more) Outdoor Units Set as "Main Unit" Exist in Same Refrigerant Cycle Number
11	Sensor on Indoor Unit	Abnormality of Inlet Air Thermistor	Incorrect Wiring, Disconnecting Wiring, Breaking Wire, Short Circuit
12		Abnormality of Outlet Air Thermistor	
13		Abnormality of Freeze Protection Thermistor	
14		Abnormality of Gas Piping Thermistor	
15		Abnormality of Outdoor Air Thermistor (EconoFresh)	
16		Abnormality of Remote Sensor (DOAS)	
17		Abnormality of Thermistor Built-in Remote Controller (DOAS)	
18	Indoor Fan Motor	Abnormality of Indoor Fan System	Abnormality of Indoor Fan Motor (Step-Out), Indoor Fan Controller Failure
19		Activation of Protection Device for Indoor Fan	Fan Motor Overheat, Lockup
1A	Indoor Fan Controller	Abnormality of Fan Controller Fin Temperature	Abnormality of Fin Thermistor or Fan Controller, Heat Exchanger Clogging, Abnormality of Fan Motor
1b		Activation of Overcurrent Protection	Abnormality of Fan Motor
1C		Problem with Current Sensor	Abnormality of Fan Controller Current Sensor
1d		Activation Fan Controller Protection	Driver IC Error Signal Detection, Instantaneous Overcurrent
1E		Abnormality of Indoor Fan Controller Voltage	Indoor Voltage Decrease, Insufficient Capacity of Power Supply Wiring
21	Sensor on Outdoor Unit	Abnormality of High Pressure Sensor	Incorrect Wiring, Disconnecting Wiring, Breaking Wire, Short Circuit
22		Abnormality of Outdoor Air Thermistor	
23		Abnormality of Discharge Gas Thermistor on Top of Compressor	
24		Abnormality of Heat Exchanger Liquid Pipe Thermistor	
25		Abnormality of Heat Exchanger Gas Pipe Thermistor	
29		Abnormality of Low Pressure Sensor	

Code	Category	Content of Abnormality	Leading Cause
30	System	Incorrect connection of CH-Box	Connection of CH-Box to Heat Pump System, Disconnection of CH-Box to Heat Recover System.
31		Incorrect Capacity Setting of Outdoor Unit and Indoor Unit	Incorrect Capacity Setting of Outdoor Unit and Indoor Unit, Excessive or Insufficient Indoor Unit Total Capacity Code
35		Incorrect Setting of Indoor Unit No.	Duplication of Indoor Unit No. In same Refrigerant Cycle Number
36		Incorrect of Indoor Unit Combination	IU is designed for R22
38		Abnormality of Picking up Circuit for Protection in Outdoor Unit	Failure of Protection Detecting Device (Incorrect Wiring of Outdoor PCB)
3A	Outdoor Unit	Abnormality of Outdoor Unit Capacity	Outdoor Unit Capacity > permitted maximum
3b		Incorrect Setting of Outdoor Unit Models Combination or Voltage	Incorrect Setting of Main and Sub Units(s) Combination or Voltage
3d		Abnormal Communication between Main Unit and Sub Unit(s)	Incorrect Wiring, Disconnect Wire, Breaking Wire, PCB Failure
3E		Abnormal Combination between Inverter PCB and Outdoor PCB	Incorrect Combination between Inverter PCB and Outdoor PCB
43	Protection Device	Activation of pressure ratio decrease protection	Defective Compression (Failure of Compressor or Inverter, Loose Power Supply Connection)
44		Activation of low pressure increase protection	Overload at Cooling, High Temperature at Heating, Expansion Valve Locking at Open Position (Loose Connector)
45		Activation of High Pressure Increase Protection	Overload Operation (Heat Exchanger Clogging, Short Circuit of Airflow), Pipe Clogging, Excessive Refrigerant, Inert Gas Mixing
47		Activation of Low Pressure Decrease Protection	Insufficient Refrigerant, Piping Clogging, Expansion Valve Locking at Close Position (Loosen Connector)
48		Activation of Inverter Overcurrent Protection	Overload Operation, Compressor Failure
51	Sensor	Abnormal Inverter Current Sensor	Current sensor failure
53	Inverter	Inverter Error Signal Detection	Driver IC Error Signal Detection (Protection for overcurrent, voltage decrease, short circuit), Instantaneous overcurrent
54		Abnormality of Inverter Fin Temperature	Abnormal Inverter Fin Thermistor, Heat Exchanger Clogging, Fan Motor Failure
55		Inverter Failure	Inverter PCB Failure
57	Fan Controller	Activation of Fan Controller Protection	Driver IC Error Signal Detection (Protection for Overcurrent, Voltage Decrease, Short Circuit), Instantaneous Overcurrent
5A		Abnormality of Fan Controller Fin Temperature	Fin Thermistor Failure, Heat Exchanger Clogging, Fan Motor Failure
5b		Activation of Overcurrent Protection	Fan Motor Failure
5C		Abnormality of Fan Controller Sensor	Failure of Current Sensor (Instantaneous Overcurrent, Increase of Fin Temperature, Voltage Decrease, Grand Fault, Step-Out)
A1	External Input	Detection of External Abnormality	Input Signal by External Abnormality Detection Setting
b0	Indoor Unit	Incorrect Setting of Unit Model Code	Incorrect Setting of Indoor Unit Model
b1		Incorrect Setting of Unit and Refrigerant Cycle Number	64 or More Number is Set for Address or Refrigerant Cycle
b2		Abnormality of EEPROM	EEPROM failure, Incorrect Data of EEPROM
b5		Incorrect Indoor Unit No. Setting	There are 17 or More Non-Corresponding to H-LINK II Units are Connected to One System.
b6		Abnormal Communication between Indoor PCB and Indoor Fan Controller	Communication Failure, Disconnected Communication Cable, Abnormal Connection
C1	CH-Box	Incorrect Change-Over Box Connection	2 or More Change-Over Boxes are Connected between Outdoor Unit and Indoor Unit
C2		Incorrect Indoor Unit Connection Number	9 or More Indoor Units Connected to CH-Box
C3		Incorrect Indoor Unit Refrigerant Number Setting	IU of Different Refrigerant Cycle Number are Connected to CH-Box
C5		Incorrect connection port setting	IU is connected to a port that is set to not used for multiple branch type CH-Box
EE	Compressor	Compressor Protection Alarm (It can not be reset from Wired Controller)	This alarm code appears when the following alarms* occurs three times within 6 hours.*02, 07, 08, 39, 43 to 45, 47

HITACHI

Johnson Controls-Hitachi Air Conditioning Spain, S.A.U.
Ronda Shimizu, 1 - Polig. Ind. Can Torrella
08233 Vacarisses (Barcelona) Spain

HITACHI certifies that our products have met EU consumer safety, health and environmental requirements.

ER-0198/1996 GA-1999/0044

Johnson Controls-Hitachi Air Conditioning Spain, S.A.U. is certified with:
ISO 9001 of AENOR, Spain for its Quality Management accordance with the standard.
ISO 14001 of AENOR Spain for its Environmental Management systems accordance with the standard.

JQA-1084 EC97J1107

HITACHI air conditioning products are manufactured according to:
ISO 9001 of JQA, Japan for its Quality Management accordance with the standard.
ISO 14001 of JACO, Japan for its Environmental Management accordance with the standard.

HITACHI participates in the Eurovent Certification Programme; the certified data of certified models are listed in the Eurovent Certification Online Directory (www.eurovent-certification.com).

TCGB0124 rev.0 - 03/2019

Printed in Spain