HITACHI

TECHNICAL CATALOGUE

HEAT PUMP AIR CONDITIONERS

- SET FREE mini-HNRQ SERIES VRF CONDITIONERS SYSREM -

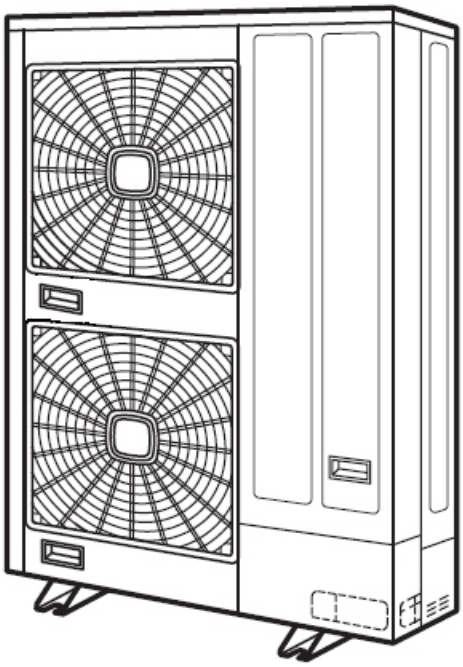

Technical Catalogue

< Outdoor Units >

Power Supply	Model
380~415V/3Ph/50Hz	RAS-070HNBRMQ2 RAS-080HNBRMQ2 RAS-090HNBRMQ2 RAS-100HNBRMQ2 RAS-110HNBRMQ2 RAS-120HNBRMQ2

TCY12021009B

IMPORTANT NOTICE

- The Company pursues a policy of continuing improvement in design and performance of products. The right is therefore reserved to vary any specifications without prior notice.
- The Company cannot anticipate every possible circumstance that might involve a potential hazard.
- This heat pump air conditioning is designed for standard air conditioning only. Do not use this heat pump air conditioning for other purposes such as drying clothes, refrigerating foods or for any other cooling or heating process.
- Do not install the unit in the following places. It may cause a fire, deformation, corrosion or failure.
  - * Places where oil (including machinery oil) splashes.
  - * Places where a lot of sulfide gas drifts such as in hot spring.
  - * Places where inflammable gas may generate or flow.
  - * Places where strong salty wind blows such as coast regions.
  - * Places with an atmosphere of acidity or alkalinity.
- Do not install the unit in the place where silicon gas drifts. If the silicon gas attaches to the surface of heat exchanger, the fin surface repels water. As a result, drain water splashes outside of the drain pan and splashed water runs inside of electrical box. In the end, water leakage or electrical devices failure may occur.
- Pay attention to the following points when the unit is installed in a hospital or other facilities where electromagnetic wave generates from medical equipment.
  - * Do not install the unit in the place where the electromagnetic wave is directly radiated to the electrical box, remote control cable or remote control switch.
  - * Install the unit at least 3 meters away from electromagnetic wave such as a radio.
- Do not install the unit in the place where the breeze directly catches the animals and plants. It could adversely affect the animals and plants.
- The installation should be in accordance with the local laws and regulations. The following standards may be applicable, if the local regulations are not available. International Organization for Standardization, ISO5149 or European Standard, EN 378 or Japan Standard, KHKS0010.
- No part of this manual may be reproduced without written permission.
- It is assumed that this heat pump air conditioner will be operated and serviced by English speaking people. If this is not the case, the distributor should add safety, caution and operating signs in the native language.
- This heat pump air conditioning unit has come with a full complement of the appropriate Safety, Danger, and Caution, Warnings.
- The air conditioning cannot work in the cooling and heating operation simultaneously. Otherwise, the indoor unit whose operation is conflicted with the operation of the outdoor unit would not work.
- If you have any questions, please contact your distributor or dealer.
- This manual provides common descriptions, basic and advanced information to maintain and service this heat pump air conditioning unit which you operate as well for other models.

CHECKING PRODUCT RECEIVED

- Upon receiving this product, inspect it for any shipping damages in transit. Claims for damage, either apparent or concealed, should be filed immediately with the shipping company.
- Check the model number, electrical characteristics (power supply, voltage and frequency rating) and accessories to determine if they are in accordance with the purchase order.
- The standard utilization of the unit shall be explained in the instructions. Therefore, the utilization of the unit other than those indicated in the instructions is not recommended.
- In case of any problem, please contact the local dealer as any issues involving installation, performance, or maintenance arise. The company's liability shall not cover defects arising from the alteration performed by a customer without the company's consent in a written form.

SAFETY SUMMARY

<Signal Words>

- Signal words are used to identify levels of hazard seriousness.
- Definitions for identifying hazard levels are provided below with their respective signal words.

DANGER DANGER indicates a hazardous situation which, if not avoided, will result in death or serious injury.

WARNING WARNING indicates a hazardous situation which, if not avoided, could result in death or serious injury.

CAUTION CAUTION, used with the safety alert symbol, indicates a hazardous situation which, if not avoided, could result in minor or moderate injury.

NOTICE NOTICE is used to address practices not related to personal injury.

NOTE NOTE is useful information for operation and/or maintenance.

⚠ DANGER

- Do not perform installation work, refrigerant piping work, drain pump, drain piping and electrical wiring connection without referring to our installation manual. If the instructions are not followed, it may result in a water leakage, electric shock or a fire.
- Use the specified non-flammable refrigerant (R410A) to the outdoor unit in the refrigerant cycle. Do not charge material other than R410A into the unit such as hydrocarbon refrigerants (propane or etc.), oxygen, flammable gases (acetylene or etc.) or poisonous gases when installing, maintaining and moving. These flammable gases are extremely dangerous and may cause an explosion, a fire and injury.
- Do not pour water into the indoor or outdoor unit. These products are equipped with electrical parts. If poured, it will cause a serious electrical shock.
- Do not open the service cover or access panel for the indoor or outdoor units without turning OFF the main power supply.
- Do not touch or adjust safety devices inside the indoor unit or outdoor units. If these devices are touched or readjusted, it may cause a serious accident.
- Refrigerant leakage can cause difficulty with breathing due to insufficient air. Turn OFF the main switch, extinguish any naked flame and contact your service contractor, if refrigerant leakage occurs.
- Make sure that the refrigerant leakage test should be performed. Refrigerant (Fluorocarbon) for this unit is incombustible, non-toxic and odorless. However, if the refrigerant is leaked and is contacted with fire, toxic gas will generate. Also, because the fluorocarbon is heavier than air, the floor surface will be filled with it, which could cause suffocation.
- The installer and system specialist shall secure safety against refrigerant leakage according to local regulations or standards.
- Use an ELB (Earth Leakage Breaker). In the event of fault, there is danger of an electric shock or a fire if it is not used.
- Do not install the outdoor unit where there is high level of oil mist, flammable gases, salty air or harmful gases such as sulfur.
- For installation, firmly connect the refrigerant pipe before the compressor starts operating. For maintenance, relocation and disposal, remove the refrigerant pipe after the compressor stops.
- Do not perform a short-circuit of the protection device such as a pressure switch when operating. It may cause a fire and explosion.

⚠ WARNING

- Do not use any sprays such as insecticide, lacquer, hair spray or other flammable gases within approximately one meter from the system.
- If circuit breaker or fuse is often activated, stop the system and contact your service contractor.
- Check that the ground wire is securely connected. If the unit is not correctly grounded, it may lead to electric shock. Do not connect the ground wiring to gas piping, water piping, lightning conductor or ground wiring for telephone.
- Before performing any brazing work, check to ensure that there is no flammable material around. When using refrigerant, be sure to wear leather gloves to prevent cold injuries.

- Connect a fuse of specified capacity.
- Protect the wires, electrical parts, etc. from rats or other small animals. If not protected, rats may gnaw at unprotected parts, which may lead to a fire.
- Fix the cables securely. External forces on the terminals could lead to a fire.
- Provide a sufficiently strong foundation. If not, the unit may fall down and it may lead to injuries.
- Do not install the unit in a place where oil, vapor, organic solvent and corrosive gas (ammonia, sulfur compound and acid) may be present in quantities. It may cause refrigerant leakage due to corrosion, electrical shock, deteriorated performance and breakage.
- Perform electrical work according to Installation Manual and all the relevant regulations and standards. If the instructions are not followed, an electrical shock and fire may occur due to insufficient capacity and inadequate performance.
- Use specified cables between units and choose the cables correctly. If not, an electrical shock or fire may occur.
- Ensure that the wiring terminals are tightened securely with the specified torques. If not, generating fire or electrical shock at the terminal connection part may occur.

⚠ CAUTION

- Do not step or put any material on the product.
- Do not put any foreign material on the unit or inside the unit.
- Provide a strong and correct foundation so that:
  a. The outdoor unit is not on an incline.
  b. Abnormal sound does not occur.
  c. The outdoor unit will not fall down due to a strong wind or earthquake.

NOTICE

- Do not install the indoor unit, outdoor unit, remote control switch and cable within approximately 3 meters from strong electromagnetic wave radiators such as medical equipment.
- Supply electrical power to the system to energize the oil heater for 12 hours before startup after a long shutdown.
- Make sure that the outdoor unit is not covered with snow or ice, before operation.
- In some cases, the packaged air conditioner may not be operated normally under the following cases.
  * In case that electrical power for the packaged air conditioner is supplied from the same power transformer as the device*.
  * In case that the power source wires for the device* and the packaged air conditioner are located close to each other.

  Device*: (Ex) Lift, container crane, rectifier for electric railway, inverter power device, arc furnace, electric furnace, large-sized induction motor and large-sized switch. It consumes a large quantity of electrical power.

Regarding the cases mentioned above, surge voltage may be inducted into the power supply cables for the packaged air conditioning due to a rapid change in power consumption of the device and an activation of a switch.

Check field regulations and standards before performing electrical work in order to protect the power supply for the new air conditioning unit.

NOTES:

- It is recommended that the room be ventilated every 3 to 4 hours.
- The heating capacity of the heat pump unit is decreased according to the outdoor air temperature. Therefore, it is recommended that auxiliary heating equipment be used in the field when the unit is installed in a low temperature region.

TABLE OF CONTENTS

1. Product Features
   - 1.1 Series Configuration 1
   - 1.2 Product Line-up 1
   - 1.3 H-LINK II System 2
   - 1.4 Intelligent Defrosting 2
2. Outdoor Units
   - 2.1 General Data 3
   - 2.2 Dimensional Data 4
   - 2.3 Structure 5
   - 2.4 Service Space 6
   - 2.5 Electrical Data 9
   - 2.6 Sound Data 10
   - 2.7 Refrigerant Cycle Diagram 12
   - 2.8 Function Control Unit. 13
   - 2.9 System Control. 14
   - 2.10 Standard Operation Sequence. 16
   - 2.11 Protection Control. 25
   - 2.12 Safety and Control Device Setting 26
   - 2.13 Electrical Wiring Diagram 27
   - 2.14 Operation Range 28
   - 2.15 Combination of Indoor Unit and Outdoor Unit 28
   - 2.16 Outdoor Unit Installation 29
   - 2.17 Refrigerant Piping Work 33
   - 2.18 Additional Refrigerant Charge Calculation 41
   - 2.19 Electrical Wiring 42
3. Selection Data
   - 3.1 Unit Nomenclature 46
   - 3.2 Selection Guide 47
   - 3.3 Outdoor Unit Capacity According to Connected IDU Capacity Ratio 49
   - 3.4 Outdoor Unit Capacity According to Temperature Condition 52
   - 3.5 Correction Factor According to Piping Length 55
   - 3.6 Correction Factor According to Defrost Operation 59

FEATURES

1. Product Features

1.1 Series Configuration

- Slimmer outdoor unit casing enables convenient installation and service;
- Fashionable exterior design of the outdoor unit meets the requirements of residential customers;
- First-class energy efficiency in the industry.

1.2 Product Line-up

Model	Capacity	Appearance
RAS-070HNBRMQ2	7.0HP	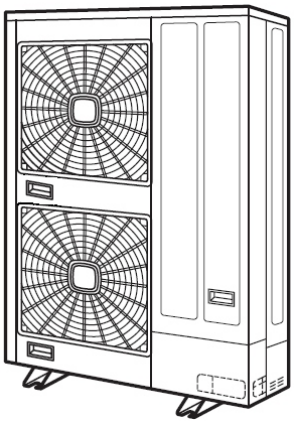
RAS-080HNBRMQ2	8.0HP	
RAS-090HNBRMQ2	9.0HP	
RAS-100HNBRMQ2	10.0HP	
RAS-110HNBRMQ2	11.0HP	
RAS-120HNBRMQ2	12.0HP	

1.3 H-LINK Ⅱ System

H-LINK Ⅱ system requires only two transmission wires connected with each outdoor uint.

- Flexible installation options;
- No polarity requirements;
- Central Control is enabled via indoor or outdoor unit;
- Up to 160 indoor units can be connected;
- Possible to have a cable length of up to 1,000m (5,000m with H-LINK Ⅱ relay);
- Up to 64 refrigerant cycles.

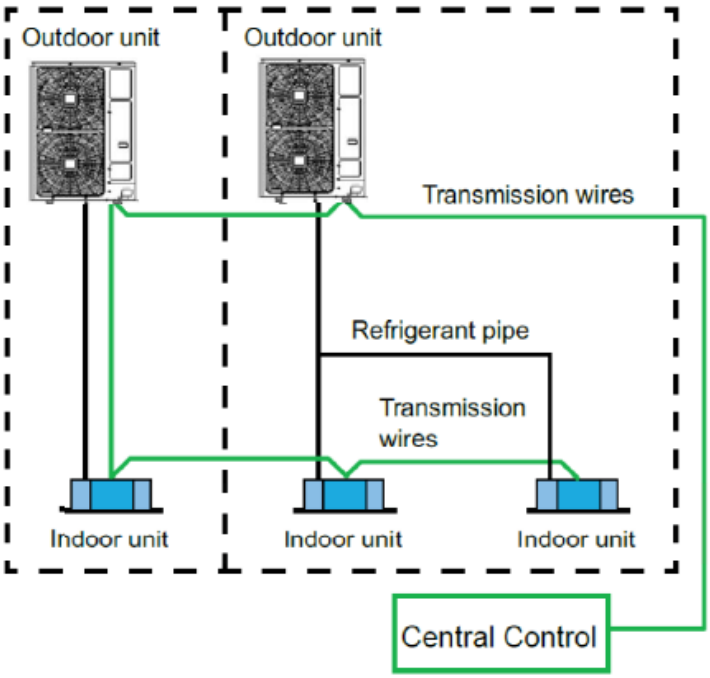

1.4 Intelligent Defrosting

The frost on the outdoor heat exchanger will reduce heating capacity, thus defrost operation is needed and the temperature of the room is undulatory at the defrost operation. The intelligent defrosting technology automatically learns the operation data of the last defrosting, then determines the optimized defrost operation next time to decrease the defrost frequency, which can improve the comfortable of the room.

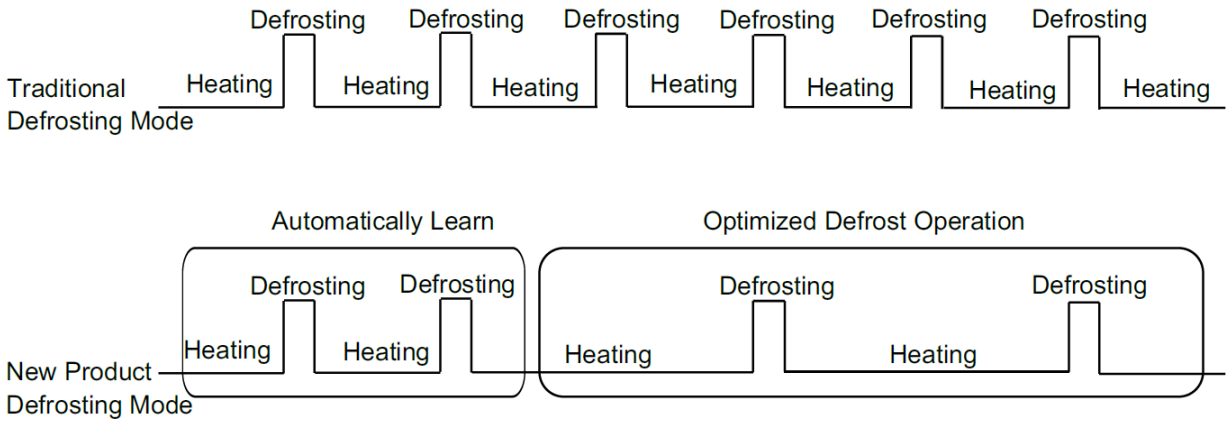

2. Outdoor Units

2.1 General Data

Model				RAS-070HNBRMQ2	RAS-080HNBRMQ2	RAS-090HNBRMQ2	RAS-100HNBRMQ2	RAS-110HNBRMQ2	RAS-120HNBRMQ2
Power Supply				380~415V/3Ph/50Hz					
Capacity	Cooling	Rated capacity	kW	20.0	22.4	25.0	28.0	31.0	33.5
		Power Input	kW	5.26	6.05	7.35	7.67	8.99	10.47
		EER	——	3.80	3.70	3.40	3.65	3.45	3.20
	Heating	Rated capacity	kW	22.4	25.0	26.0	31.5	33.9	37.5
		Power Input	kW	5.46	6.25	6.50	8.29	9.42	10.14
		COP	——	4.10	4.00	4.00	3.80	3.60	3.70
Noise		Rated	dB(A)	56/58	57/59	57/59	58/60	59/61	59/61
Outer Dimensions(Height×Width×Depth)			mm	1650×1100× 390					
Package Dimensions(Height×Width×Depth)			mm	1806×1185× 530					
Weight		Net	kg	153	153	153	160	170	170
		Gross	kg	171	171	171	178	188	188
Heat Exchanger		Type	-	Multi-Pass Cross-Finned Tube					
		Material	-	Cu-Al					
Compressor		Type	-	Scroll	Scroll	Scroll	Scroll	Scroll	Scroll
		Q'ty	-	1	1	1	1	1	1
		Drive Mode	-	Inverter	Inverter	Inverter	Inverter	Inverter	Inverter
		Crankcase Heater	W	80	80	80	80	80	80
Refrigerant Oil		Type	-	FV68H			FVC68D		
		Charge Amount	L	1.6			1.9		
Fan		Quantity	Q'ty	2	2	2	2	2	2
		Motor Output	kW	0.138×2	0.138×2	0.138×2	0.138×2	0.138×2	0.138×2
		Airflow Rate	m^3/min	121	121	121	150	163	163
Refrigerant		Type	-	R410A					
		Charge Amount	kg	5.6	5.6	5.6	7.0	9.0	9.0
Gas Side Stop Valve			mm	Φ19.05	Φ19.05	Φ19.05	Φ19.05*	Φ19.05*	Φ19.05*
Liquid Side Stop Valve			mm	Φ9.52	Φ9.52	Φ9.52	Φ12.7	Φ12.7	Φ12.7
Connection Method			-	Flare					
Design Pressure(High/Low)			MPa	4.15/2.21					

◆ The test is under the following conditions when it is combined with test indoor units.

Working condition for testing EER:

Indoor temperature: 27°C DB/19°C WB; Outdoor temperature: 35°C DB

Working condition for testing COP:

Indoor temperature: 20°C DB; Outdoor temperature: 7°C DB/6°C WB

Pipe length: 10m; Pipe lift: 0m

◆ Noise test conditions are specified below:

Noise is tested 1.5m above ground level and 1m away from the surface of the external service board on the outdoor unit. Noise parameters are tested in a semi-anechoic chamber.

◆ Mark " * " represent that there is a pipe adapter in the outdoor unit, which is used to adjust the gas pipe between the outdoor unit and the first branch. Thus the Φ19.05 diameter pipe is converted to Φ22.2 diameter pipe in the model of RAS-100HNBRMQ2, and the Φ19.05 diameter pipe is converted to Φ25.4 diameter pipe in the model of RAS-110~120HNBRMQ2.

2.2 Dimensional Data

Unit: mm

Model: RAS-070~120HNBRMQ2

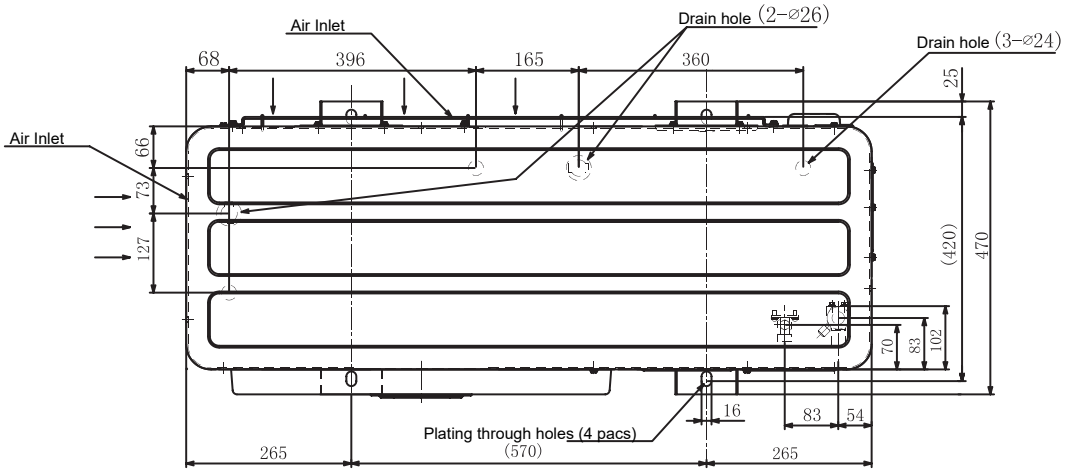

Drainage problems which occur during defrosting operation:

1) Choose a place with smooth drainage to install the unit, and provide drainage grooves.

2) In order to avoid backflow of water, please do not make the inclined slope face the unit.
Provide an accessory drain pan under the outdoor unit to collect and safely discharge defrosting water.

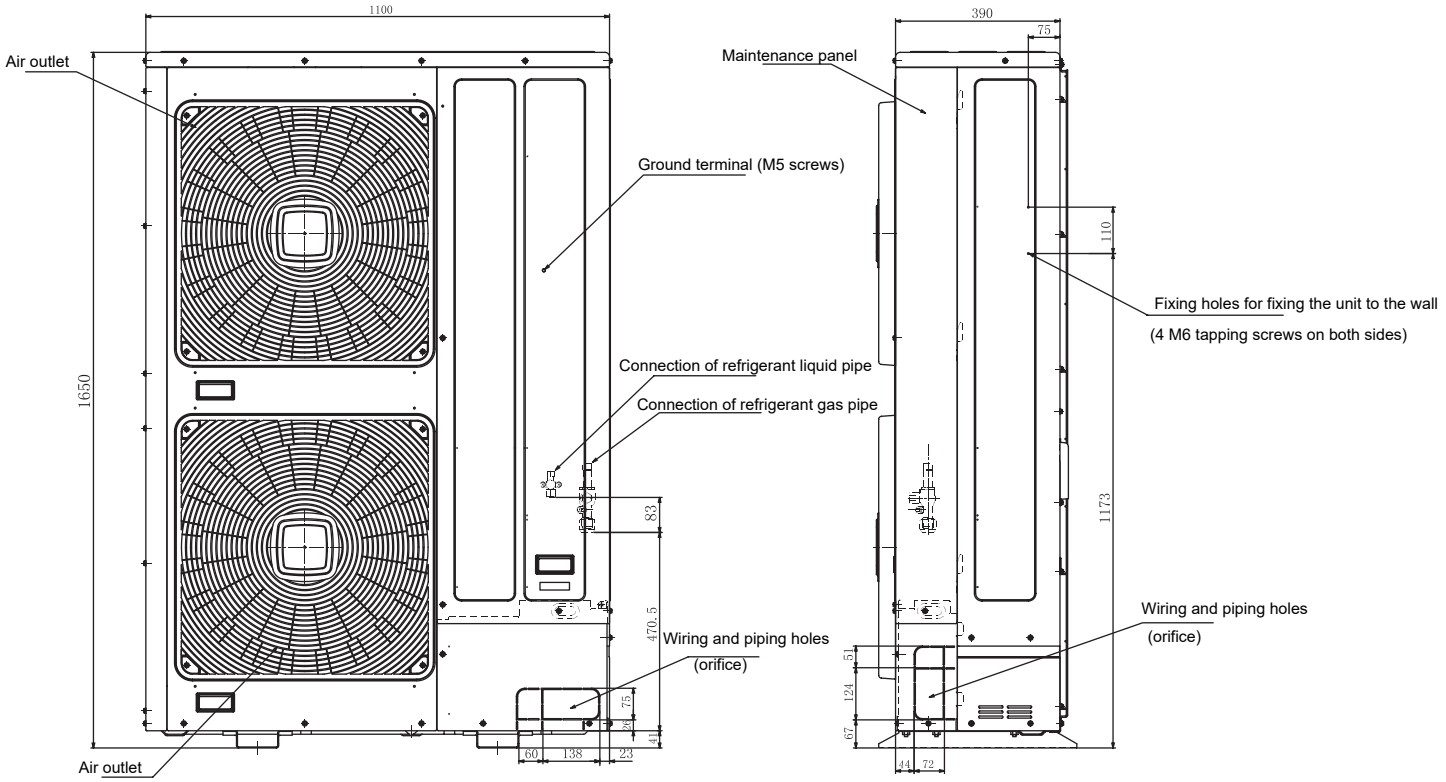

OUTDOOR UNITS

2.3 Structure
Model: RAS-070~120HNBRMQ2

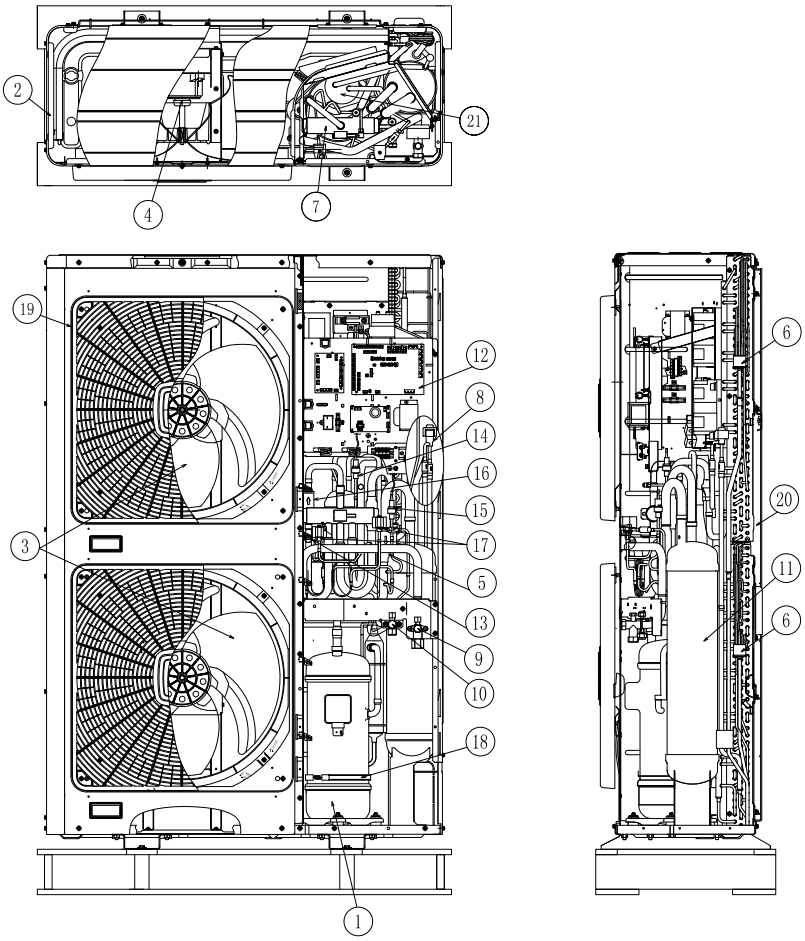

No.	Part Name	No.	Part Name
1	Compressor	12	Electrical Box
2	Heat Exchanger	13	High Pressure Switch
3	Propeller Fan	14	High Pressure Sensor
4	Fan Motor	15	Low Pressure Sensor
5	Strainer	16	Check Valve
6	Distributor	17	Solenoid Valve
7	4-Way Valve	18	Crankcase Heater
8	Electronic Expansion Valve	19	Air Outlet
9	Gas Stop Valve	20	Air Inlet
10	Liquid Stop Valve	21	Receiver
11	Accumulator		

2.4 Service Space

When an outdoor unit is installed, the allowed service space as follows:

◆ If there is not enough service space for air inlets and outlets, it may result in a performance drop-off and mechanical issues due to insufficient air intake.

◆ Additionally, adequate service space is required for service maintenance access.

(1) Obstacles on inlet side

Unit: mm

(a)There is no obstacle in the upper side.

Single Installation	Multiple Installation
* Around sides are open. * Around sides are closed. 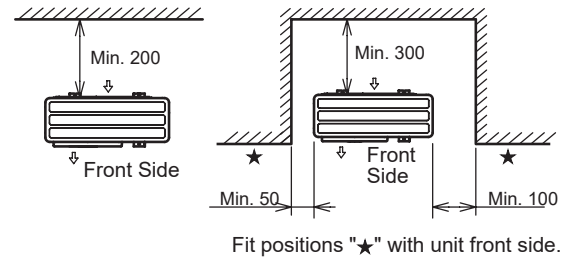	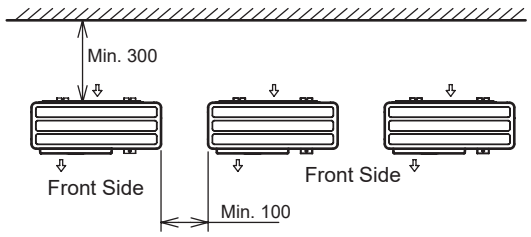 NOTE: Open both right and left sides.
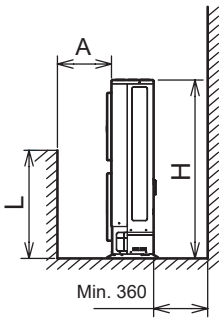 NOTES: ˜ Install Airflow Guide (optional) ˜ Open both right and left sides.	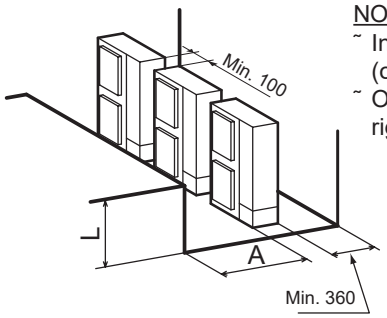 NOTES: ˜ Install Airflow Guide (optional) ˜ Open both right and left sides.

(b) There are obstacles in the upper side.

Unit: mm

Single Installation	Multiple Installation
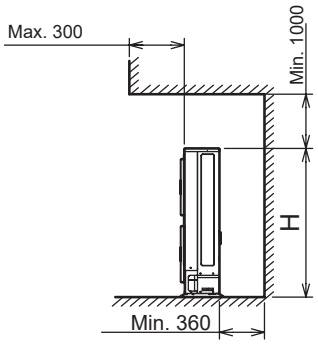	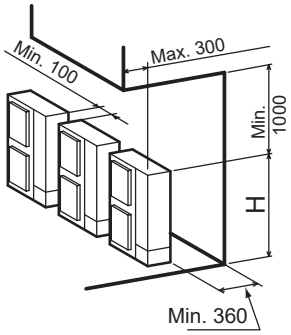 NOTE: Open both right and left sides.
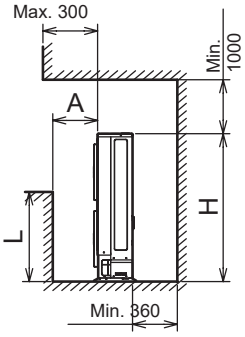 NOTES: ˜ Install Airflow Guide (optional) ˜ Open both right and left sides.	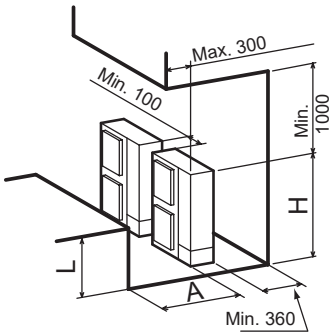 NOTES: ˜ Install Airflow Guide (optional) ˜ Open both right and left sides. ˜ No more than 2 units for multiple installation

OUTDOOR UNITS

(2)Obstacles on the outlet side and no obstacle in the upper side

Unit: mm

Single Installation	Multiple Installation
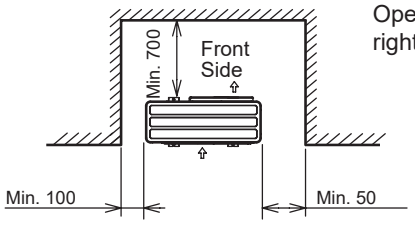 NOTE: Open eather right or left side.	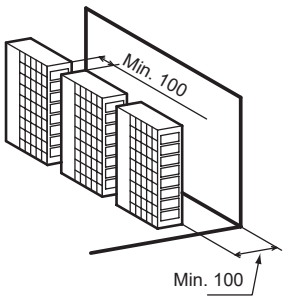 NOTE: Open both right and left sides.
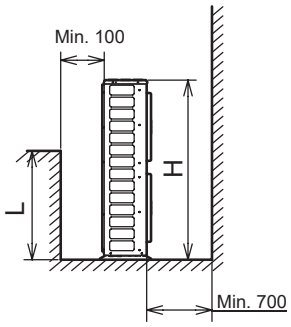 NOTES: ~ Install Airflow Guide (optional) ~ Open both right and left sides.	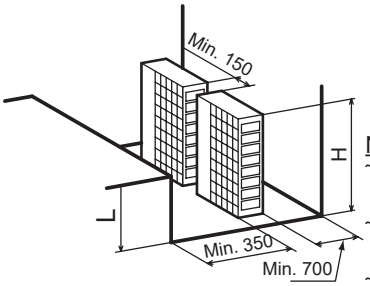 NOTES: ~ Install Airflow Guide (optional) ~ Open both right and left sides. ~ No more than 2 units for multiple installation

(3)Obstacles on the right and left sides of single installation

(a)There is no obstacle in the upper side.

(b)There are obstacles in the upper side.

Unit: mm

Single Installation	
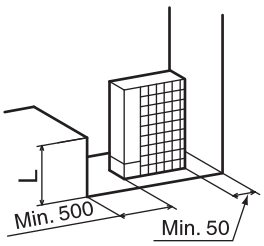	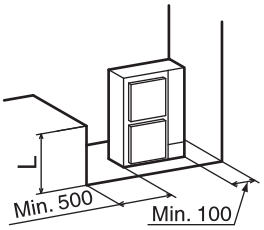

Single Installation	
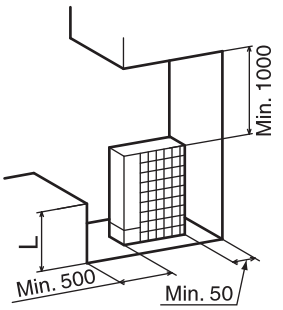	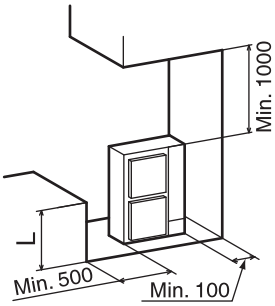

NOTE:

◆ If L is larger than H, mount the units on a base so that H is greater or equal to L.
H: Unit Height (1650mm) + Base Concrete Height

L	A
0 < L ≤ 1/2H	600 or more
1/2H < L ≤ H	1400 or more

◆ In this situation ensure that the base is closed and does not allow the airflow to short circuit. In each case, install the outdoor unit so that the discharge flow is not short-circuited.

(4)Multi-row and multiple installations.

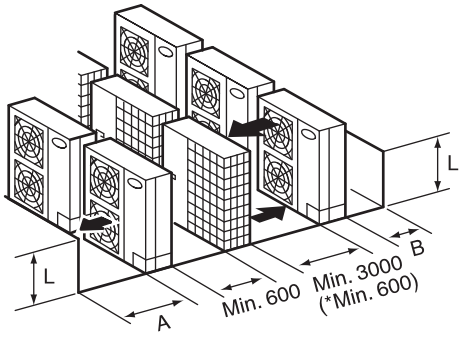

Unit: mm

Keep a distance of more than 15mm between other units and do not put obstacles on the rigtht and left sides.

L	A	B
0 < L ≤ 1/2H	600 or more	300 or more
1/2H < L ≤ H	1400 or more	350 or more

NOTE:

- If L is larger than H, mount the units on a base so that H is greater or equal to L.
  In this situation ensure that the base is closed and does not allow the airflow to short circuit.
  When the mark * dimension is secured, be sure to mount the airflow guide.

OUTDOOR UNITS

2.5 Electrical Data

Model	Power Supply			Voltage Range		Rated Current Input		MOP	MCA
	Voltage	PH	Hz	Max	Min	Cooling	Heating		
	(V)	Φ	Hz	(V)	(V)	A	A	A	A
RAS-070HNBRMQ2	380~415	3	50	456.5	342	8.7	9.03	25	20.5
RAS-080HNBRMQ2	380~415	3	50	456.5	342	10.0	10.33	25	20.5
RAS-090HNBRMQ2	380~415	3	50	456.5	342	12.15	10.75	25	20.5
RAS-100HNBRMQ2	380~415	3	50	456.5	342	12.68	13.71	32	26
RAS-110HNBRMQ2	380~415	3	50	456.5	342	14.86	15.58	32	26
RAS-120HNBRMQ2	380~415	3	50	456.5	342	17.31	16.77	32	26

NOTES:

MCA: Minimum Circuit Ampacity (A);

MOP: Maximum Overcurrent Protective Device (A)

2.6 Sound Data

RAS-070HNBRMQ2	Power：380-415V/50Hz

Measuring point:1m distancing from the front panel of unit and 1.5m higher than ground

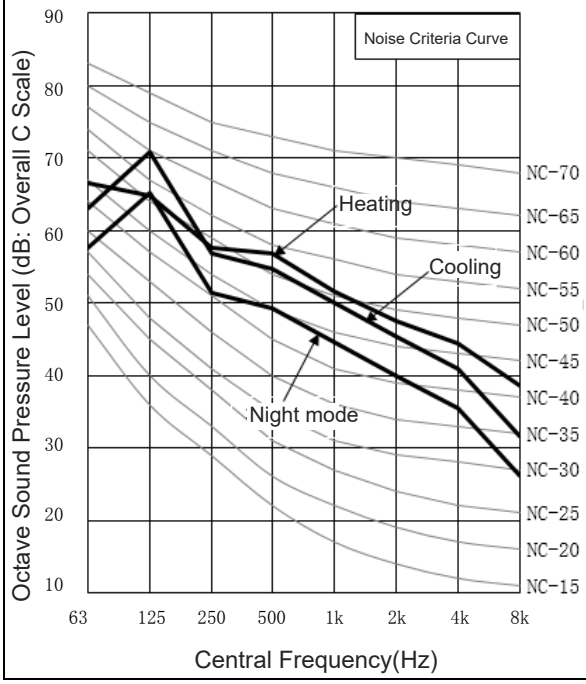

RAS-080HNBRMQ2	Power：380-415V/50Hz

Measuring point:1m distancing from the front panel of unit and 1.5m higher than ground

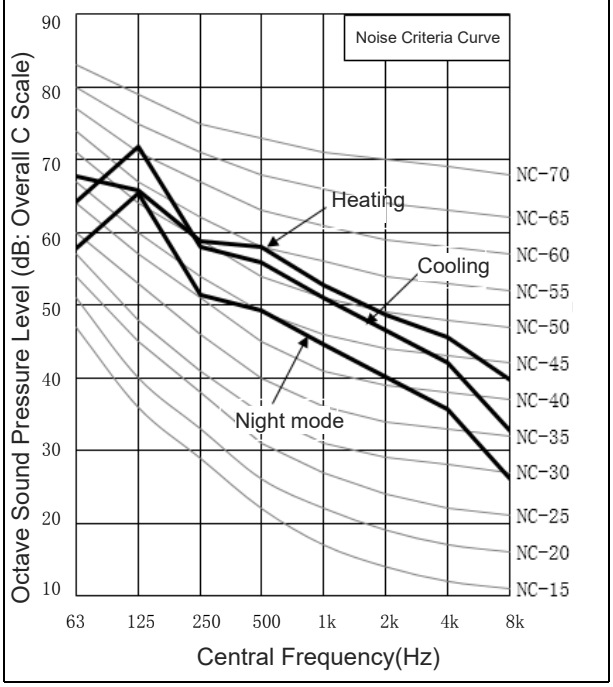

RAS-090HNBRMQ2	Power：380-415V/50Hz

Measuring point:1m distancing from the front panel of unit and 1.5m higher than ground

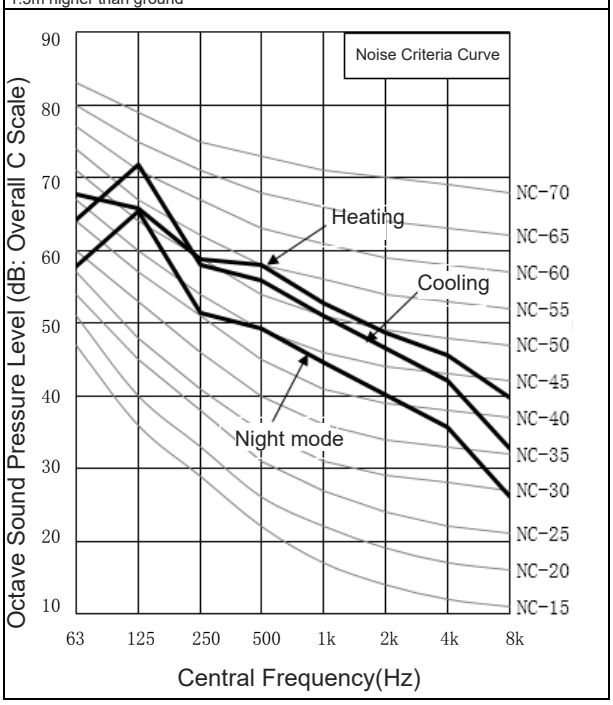

RAS-100HNBRMQ2	Power：380-415V/50Hz

Measuring point:1m distancing from the front panel of unit and 1.5m higher than ground

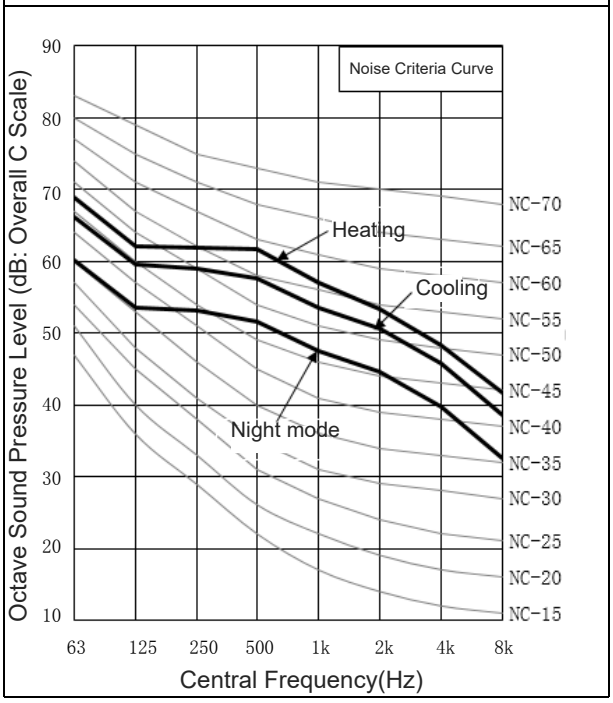

OUTDOOR UNITS

RAS-110HNBRMQ2	Power：380-415V/50Hz

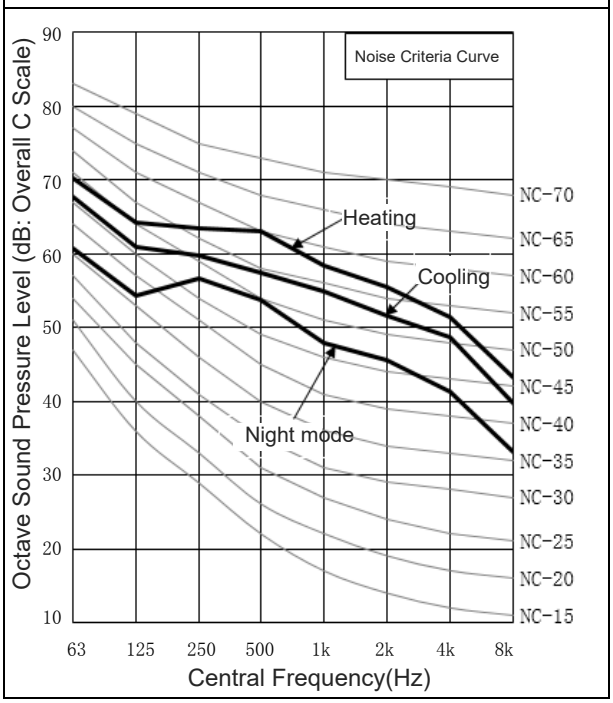

RAS-120HNBRMQ2	Power：380-415V/50Hz

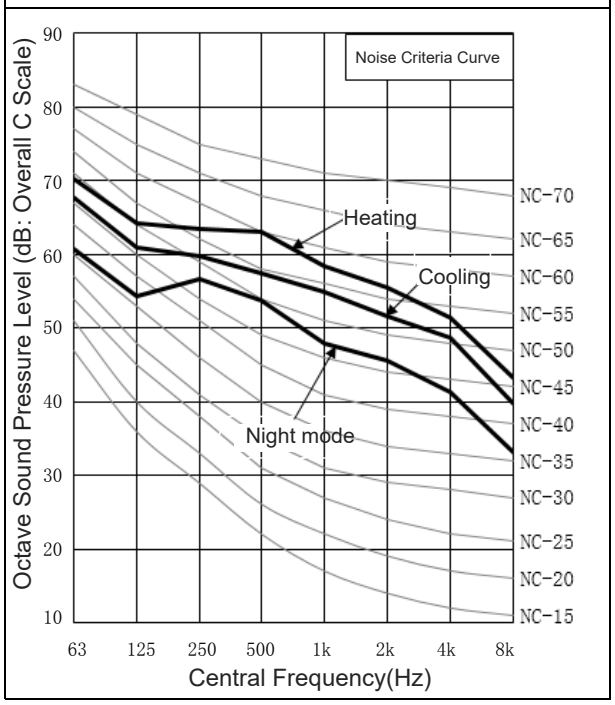

NOTE:

- Noise is tested 1.5m above ground level and 1m away from the surface of the external service cover on the outdoor unit. Noise parameters are tested in a semi-anechoic chamber.

2.7 Refrigerant Cycle Diagram

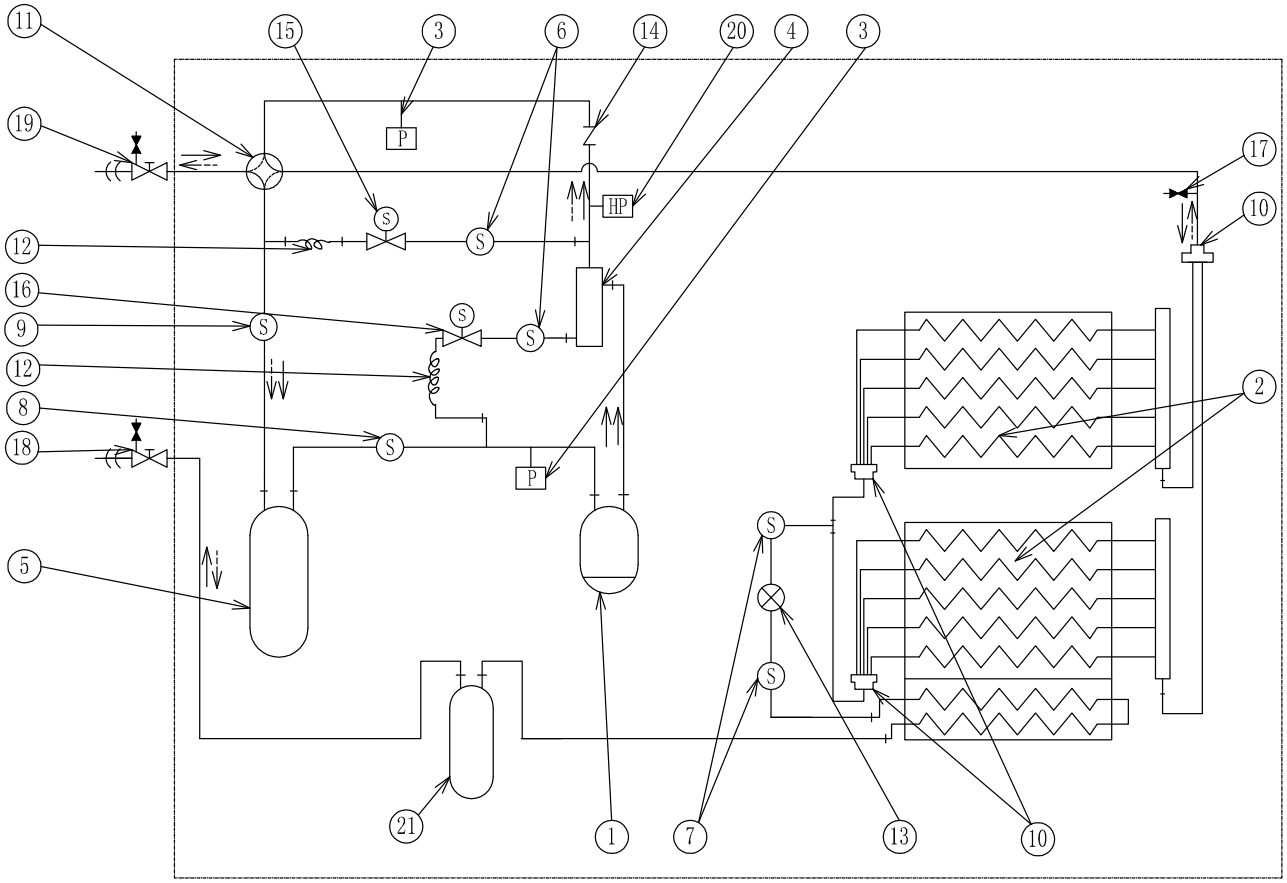

No.	Part name
①	Compressor
②	Heat Exchanger
③	High Pressure Sensor
④	Oil Separator
⑤	Accumulator
⑥	Strainer
⑦	Strainer
⑧	Strainer
⑨	Strainer
⑩	Distributor
⑪	4-Way Valve
⑫	Capillary Tube
⑬	Electronic Expansion Valve
⑭	Check Valve
⑮	Solenoid Valve
⑯	Solenoid Valve
⑰	Check Joint
⑱	Liquid Stop Valve
⑲	Gas Stop Valve
⑳	High Pressure Switch
㉑	Receiver

: Cooling Operation

: Heating Operation

: Brazing Connection

: Flare Connection

OUTDOOR UNITS

2.8 Function Control Unit

Table 1 lists the control system of refrigerating cycle separately

Table 1. Refrigerant Cycle Control

Control Item	Measures	
	Cooling Operation	Heating Operation
Revolution of Outdoor Fan	Control discharge pressure: Pd	The pressure can be controlled based on the outdoor air temperature
Opening degree of electronic expansion valve of outdoor unit	Full open	Control the Temperature of discharge gas superheat: Td SH
Opening degree of electronic expansion valve of indoor unit	1. Control the balance between the indoor units; 2. Control the temperature difference between gas–liquid pipe of indoor heat exchanger; 3. Control the Temperature of discharge gas superheat: Td SH	1. Control the temperature difference of inlet and outlet indoors; 2. Balance the temperature difference between the gas–liquid pipes of each indoor unit.
Inverter frequency of compressor	1. Refrigerant cycles of indoor unit should be fully operated; 2. Pd control.	1. Refrigerant cycles of indoor unit should be fully operated; 2. Pd control.

The network of control system can be displayed in the following table

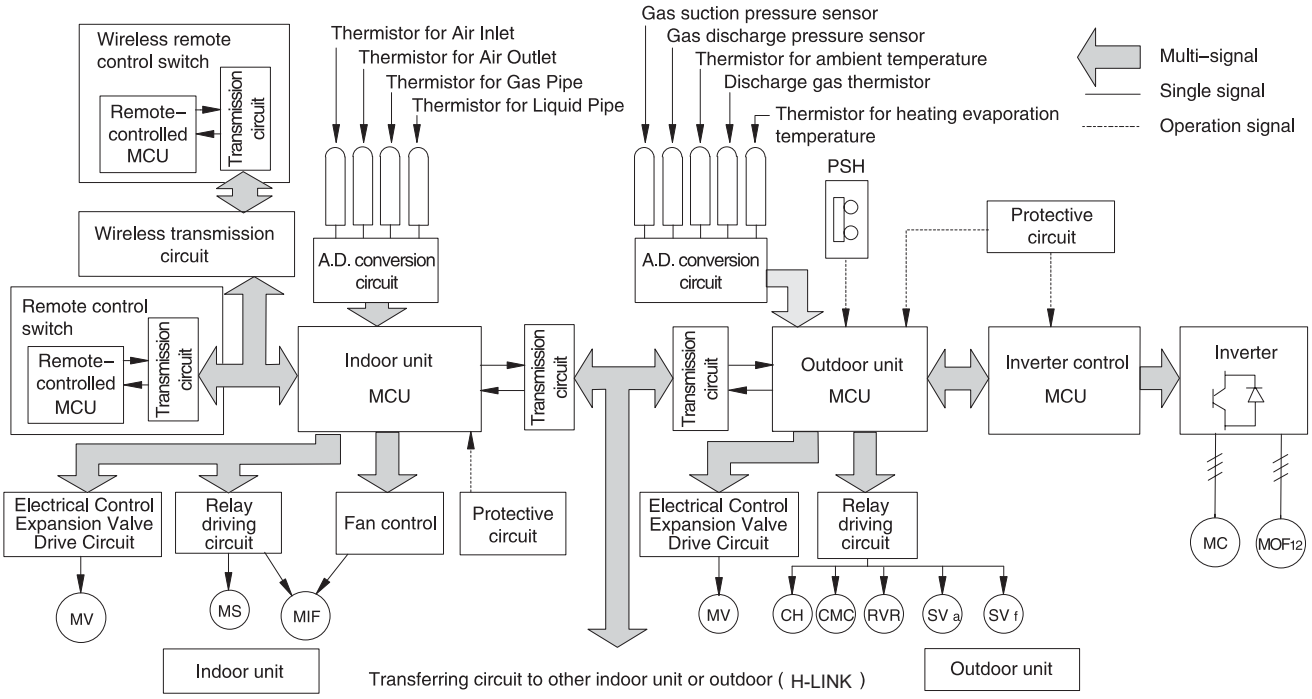

Symbol	Name
MC	Motor of compressor
MIF	Fan motor of indoor unit
MOF 12	Fan motor of outdoor unit
MS	Motor of auto–louver
MV	Electronic expansion valve

Symbol	Name
CMC	Electromagnetic contactor
RVR	Four–way valve
SV a, f	Solenoid valve
PSH	Pressure switch
CH	Crankcase heater

2.9 System Control

2.9.1 Remote controller installed indoors

Individual operation system

"One to one" control – one indoor unit is controlled by one remote control switch.

Control mode	One to one
Operation mode	Independent
(1) ON/OFF	Yes
(2) Operation mode setting	Yes *
(3) Indoor temperature setting	Yes
(4) Fan speed setting	Yes
(5) Time setting	Yes
(6) ON/OFF by timer control	Yes
(7) Operation display	Yes
(8) Alarm display	Yes
(9) Self–check display	Yes
(10) Test mode	Yes

* Cooling and heating cannot be operated simultaneously.

Independent control

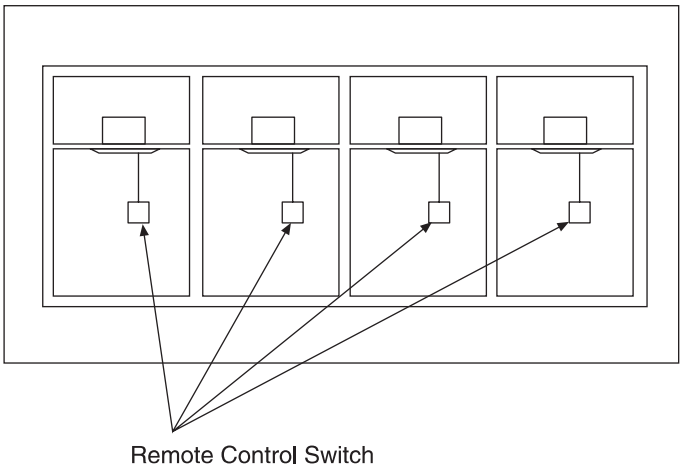

Group control operation system

One remote control switch can simultaneously control sixteen indoor units. This system is available for wider places, such as hospital, rest hall of hotel and restaurant, etc. All indoor units can be opened or closed quickly and easily using one remote controller.

Control mode	One remote controller
Operation mode	Based on group as unit
(1) ON/OFF	Yes
(2) Operation mode setting	Yes
(3) Indoor temperature setting	Yes
(4) Fan speed setting	Yes
(5) Time setting	Yes
(6) ON/OFF by timer control	Yes
(7) Operation display	Yes
(8) Alarm display	Yes
(9) Self–check function	Yes
(10) Test mode	Yes

Centralized control

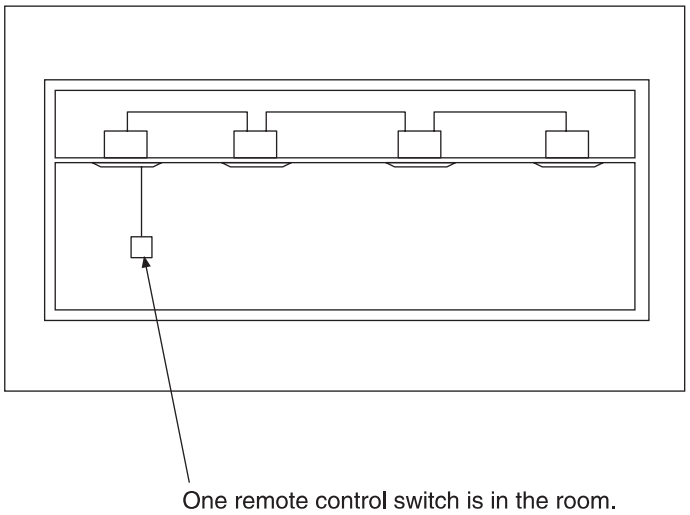

OUTDOOR UNITS

2.9.2 Group Control from a Remote Place

One remote controller can installed at the position far away from the site, which can simultaneously control sixteen indoor units. This system is especially available for the open air conditioning sites, such as hospital, rest hall of hotel and building. All unit switches can be opened or closed quickly and easily using one remote controller.

Control mode	Grouped control
Operation mode	Independent
(1) ON/OFF	Yes
(2) Operation mode setting	Yes
(3) Indoor temperature setting	Yes
(4) Fan speed setting	Yes
(5) Time setting	Yes
(6) ON/OFF by timer control	Yes
(7) Operation display	Yes
(8) Alarm display	Yes
(9) Self–check function	Yes
(10) Test mode	Yes

Simultaneously control

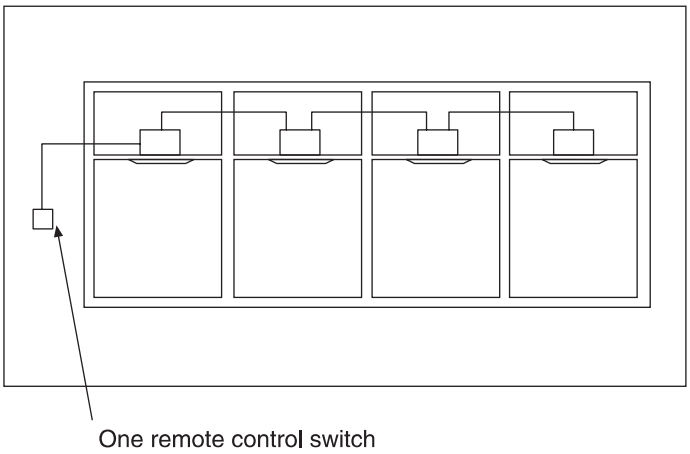

2.9.3 Control in a Room / Control from a Remote Place

Sixteen indoor units can be controlled using main remote control switch and sub–remote control switch in maximum.

Simultaneous Operation System

Two remote control switches can be used for controlling mostly 16 sets of indoor units; one remote control switch is installed in the room and the other is installed in the remote central control room. This system is very available for open air conditioning site, such as rest hall of hotel and dining room.

Control mode	Selected remote controller used in room	Remote controller selected for long distance
Operation mode	One group	One group
(1) ON/OFF	Yes	Yes
(2) Operation mode setting	Yes *	Yes *
(3) Indoor temperature setting	Yes	Yes
(4) Fan speed setting	Yes	Yes
(5) Time setting	Yes	Yes
(6) ON/OFF by timer control	Yes	Yes
(7) Operation display	Yes	Yes
(8) Alarm display	Yes	Yes
(9) Self–check function	Yes	Yes
(10) Test mode	Yes	Yes

Two remote controlling

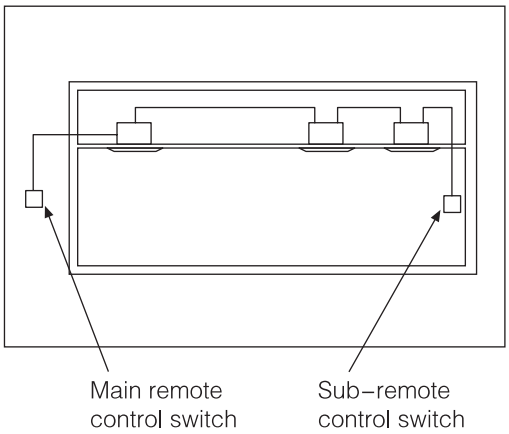

Note:

In this system, the remote controller set at last has the priority.

2.10 Standard Operation Sequence

◆ Cooling Operation

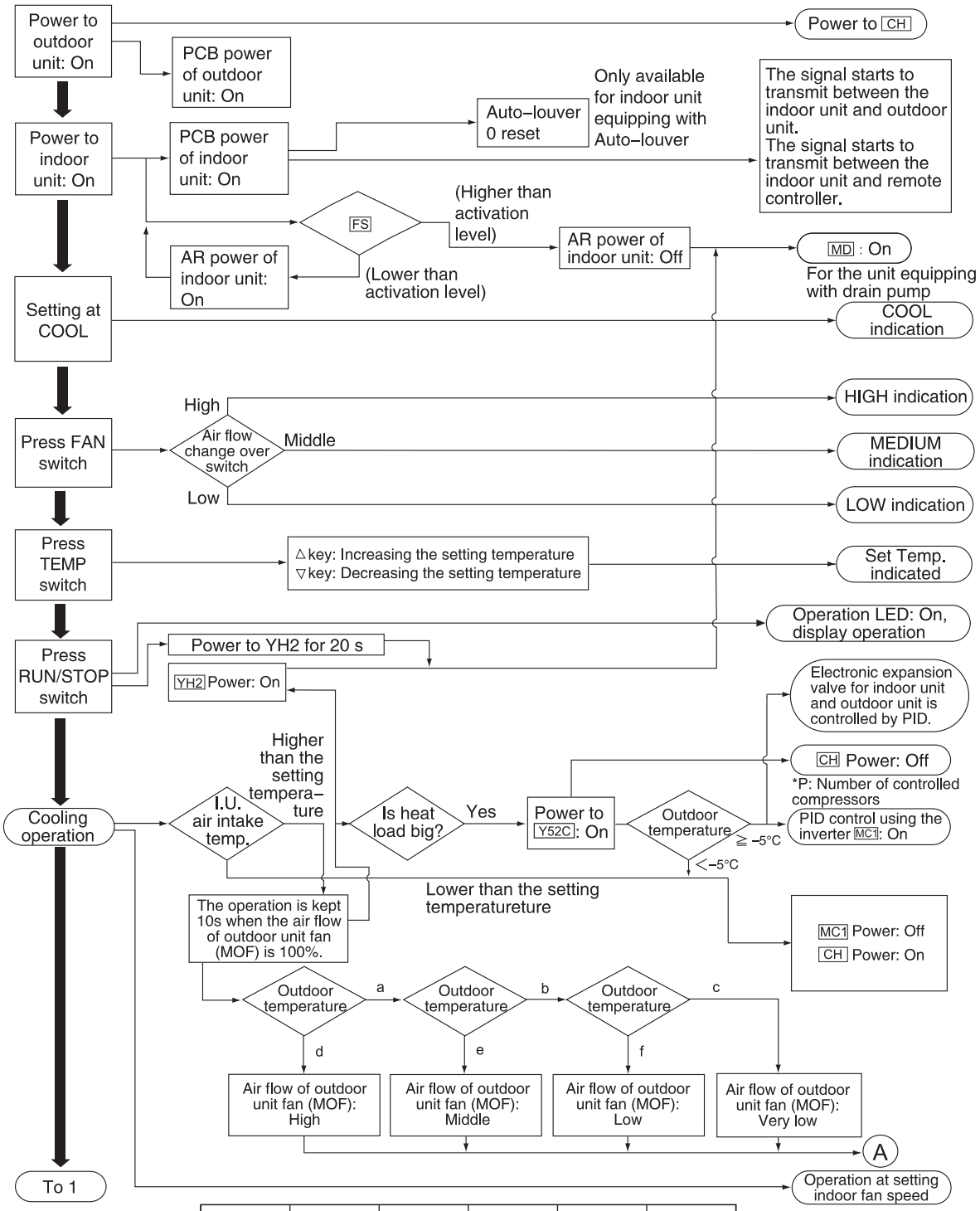

a	b	c	d	e	f
Lower than 25℃	Lower than 18℃	Lower than 11℃	Higher than 25℃	Higher than 18℃	Higher than 11℃

OUTDOOR UNITS

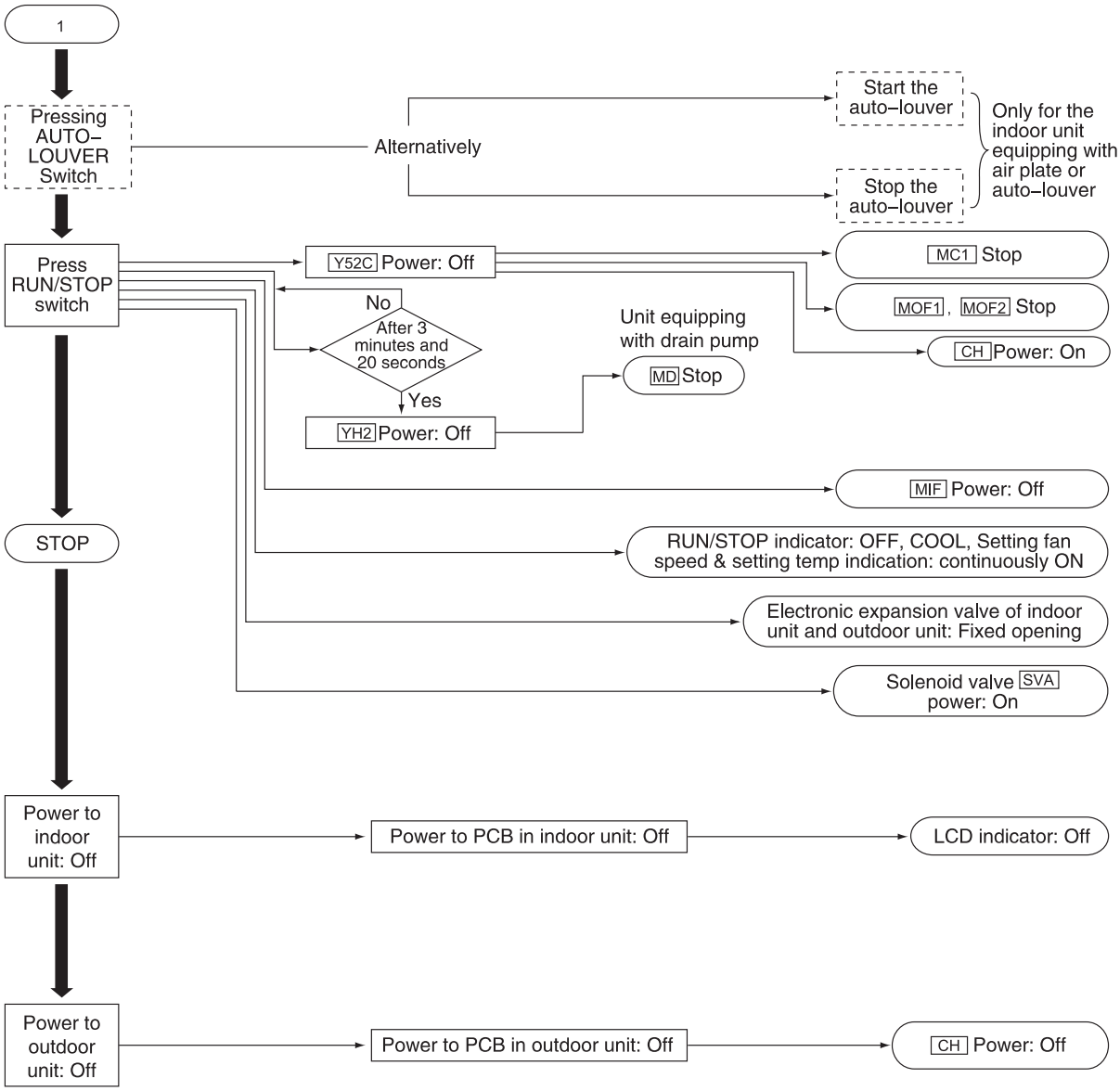

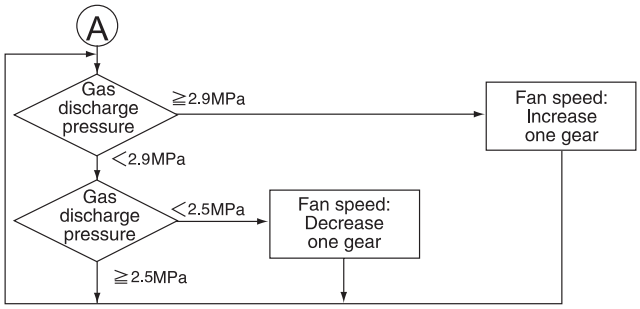

◆ Dry Operation

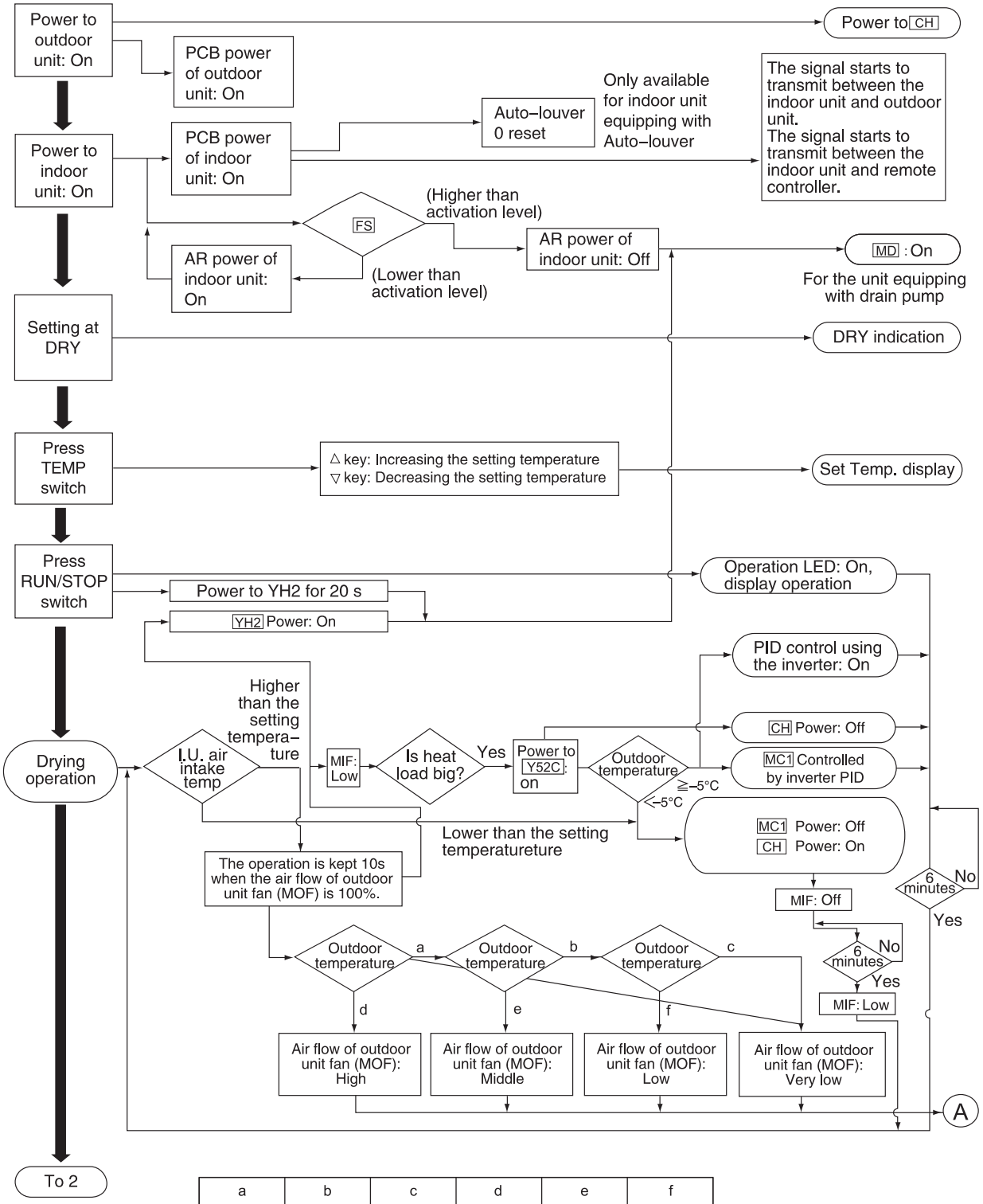

a	b	c	d	e	f
Lower than 25℃	Lower than 18℃	Lower than 11℃	Higher than 25℃	Higher than 18℃	Higher than 11℃

OUTDOOR UNITS

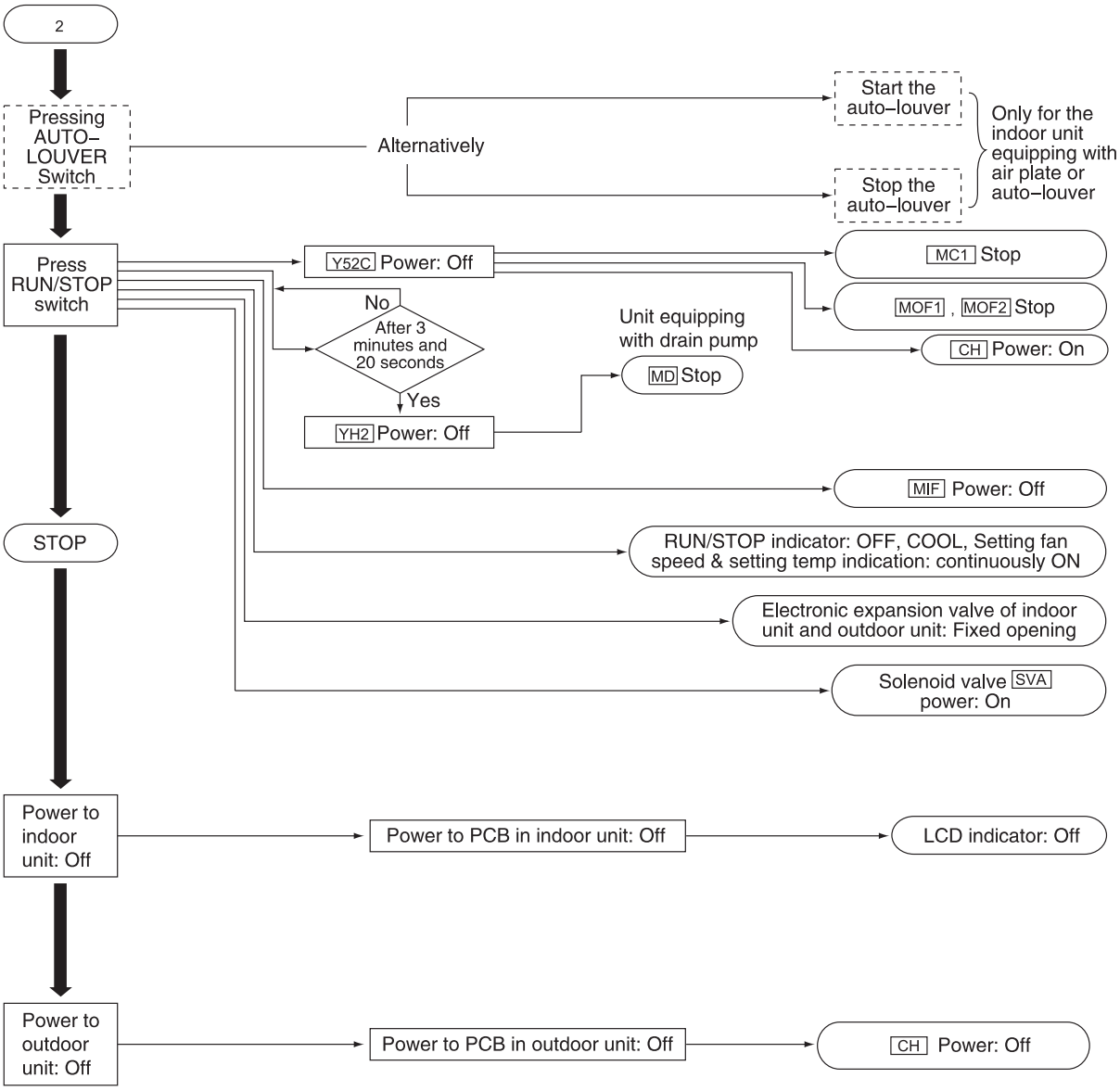

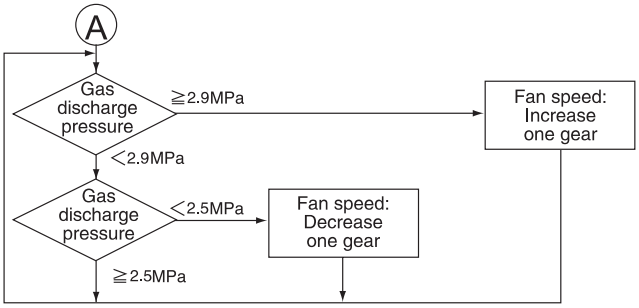

Freezing Protection Control during Cooling or Dry Operation

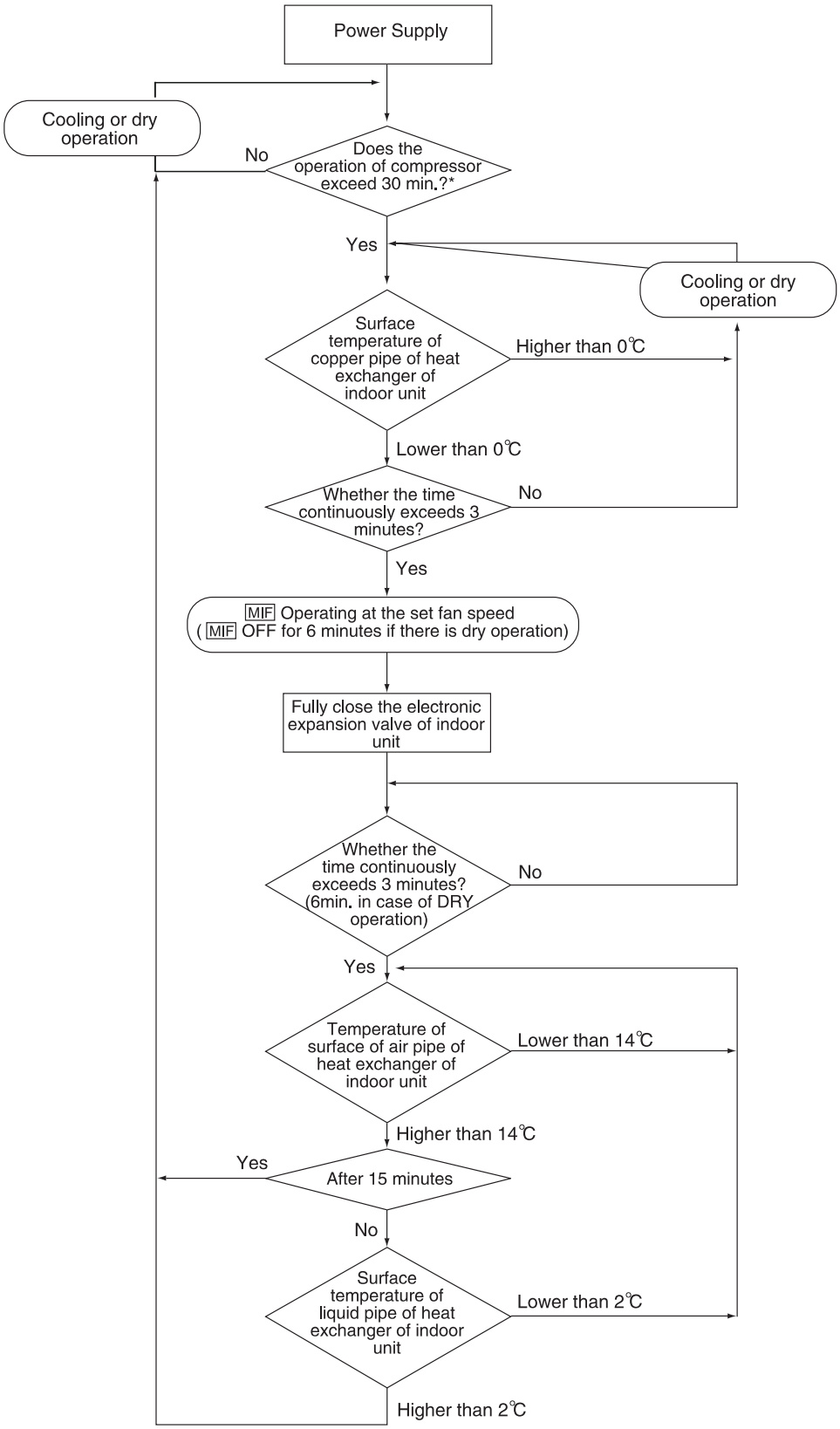

*: The operation time of compressor should be confirmed based on the operation condition.

OUTDOOR UNITS

◆ Heating Operation

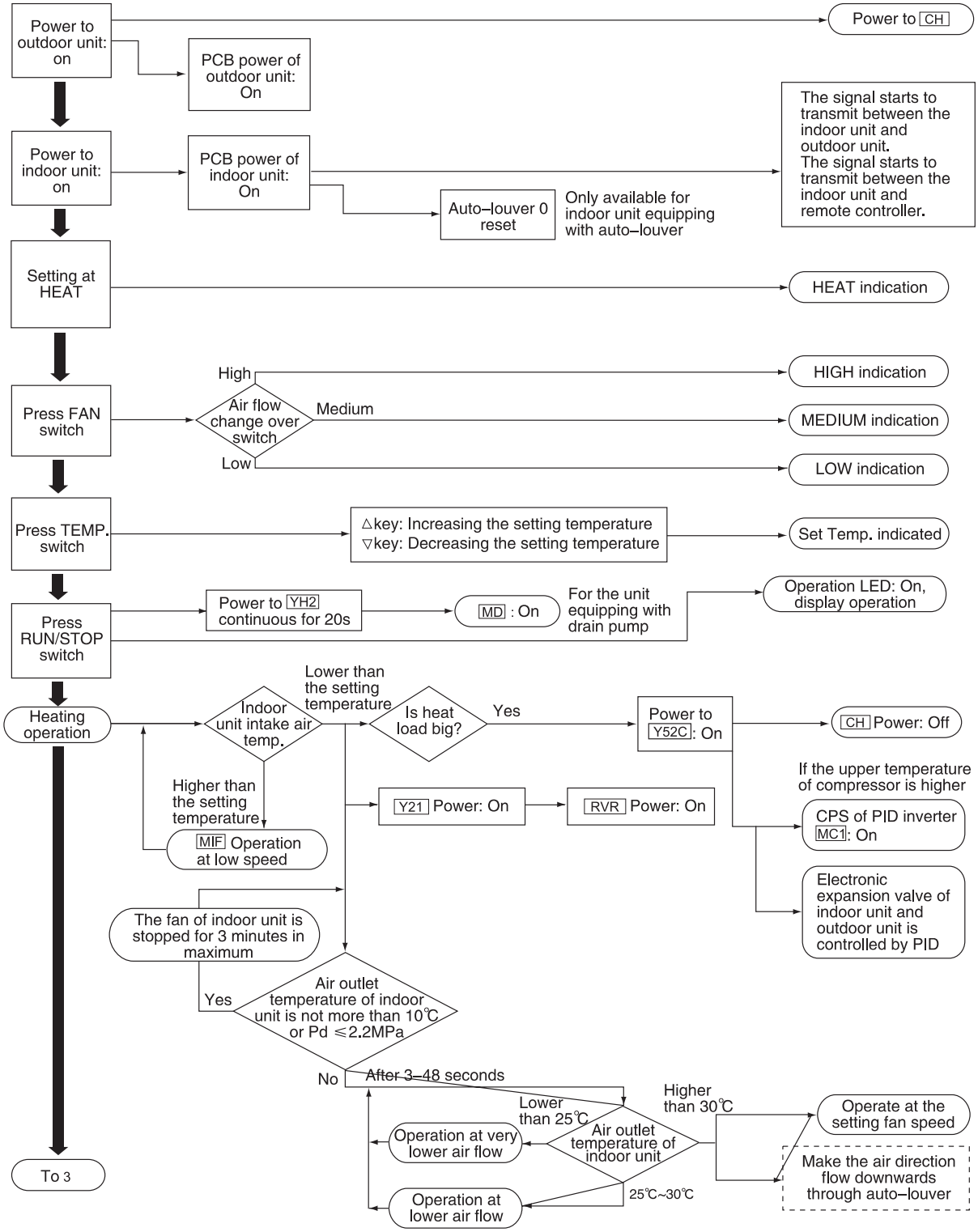

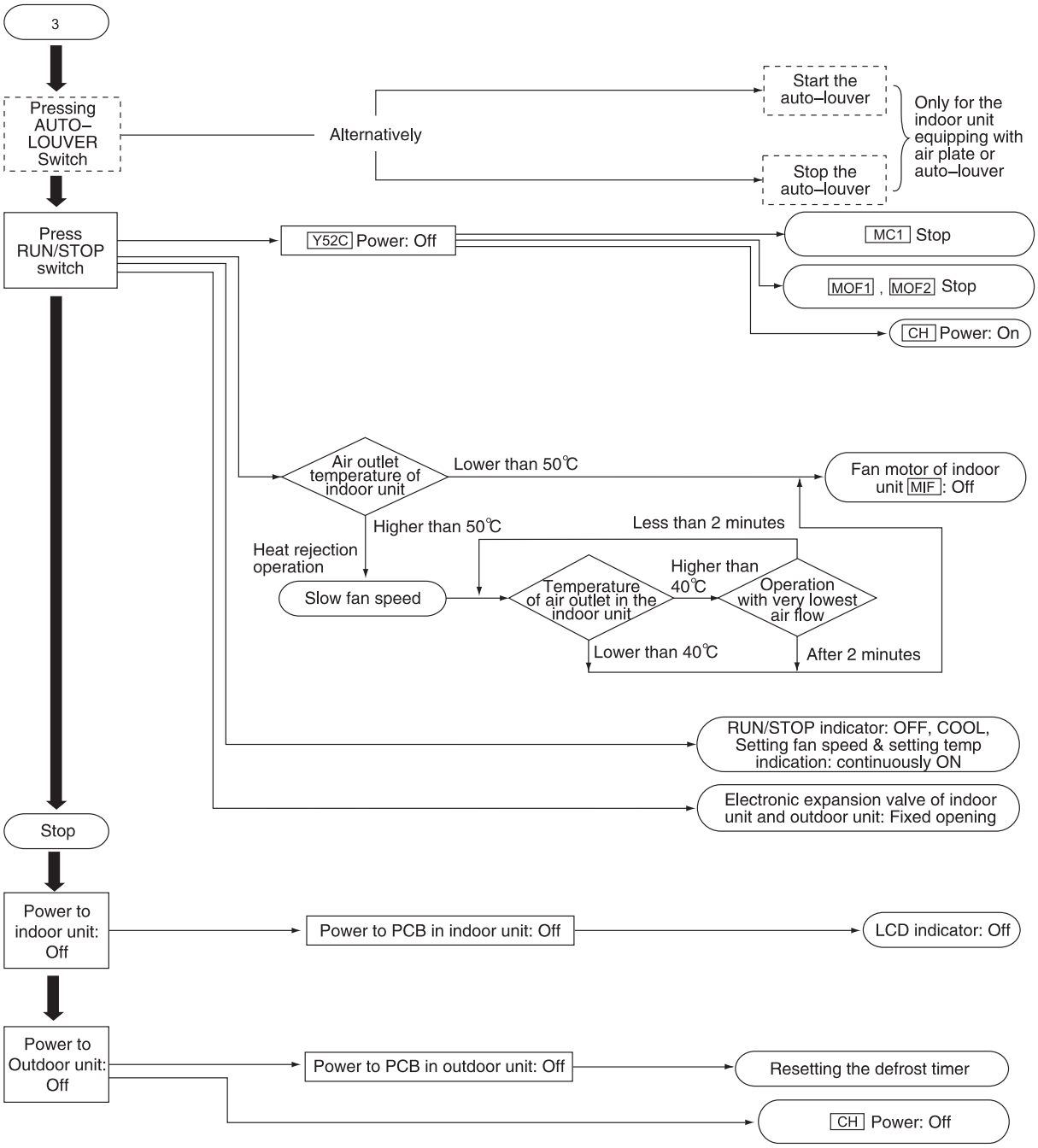

: Unequipped, optional component

OUTDOOR UNITS

◆ Defrost operation

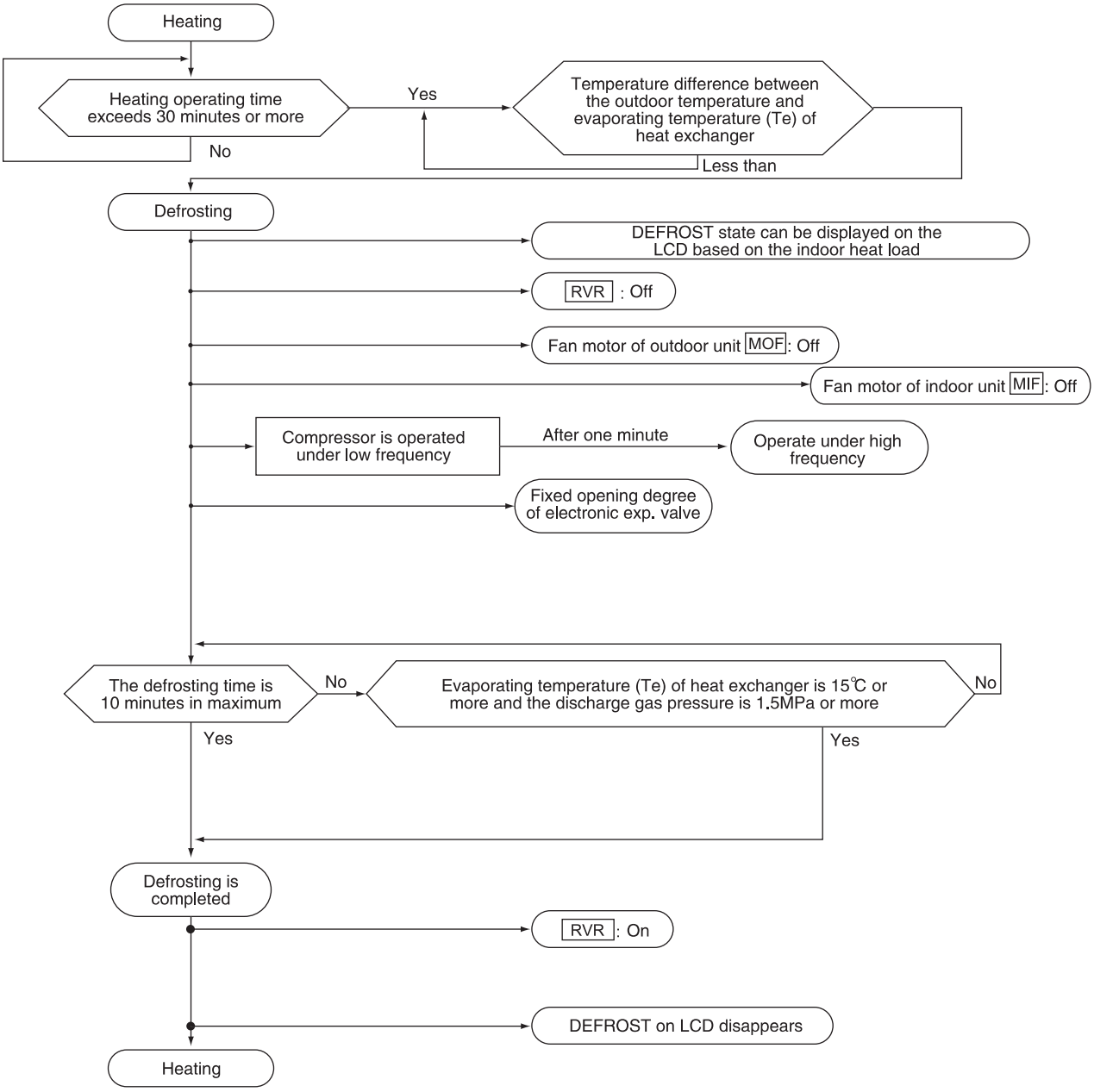

Air Blowing Temperature Overheat Protection

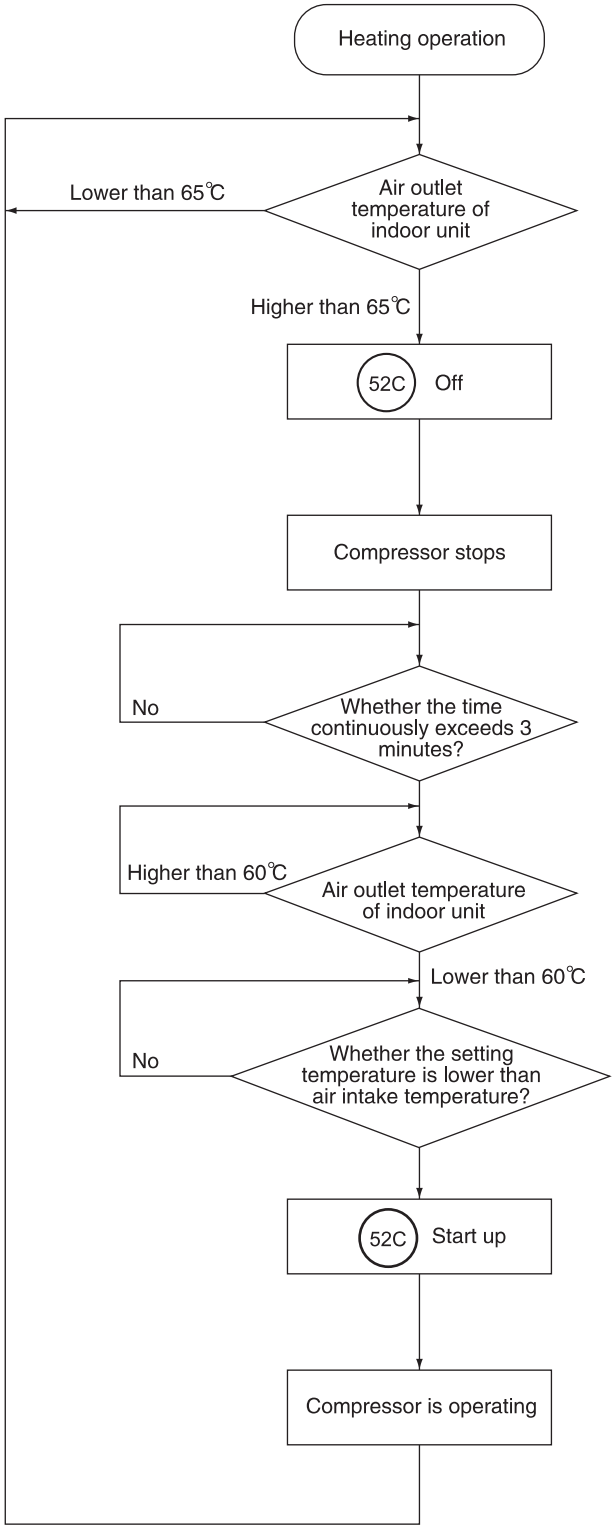

2.11 Protection Control

Whenever protection control sequences are activated, the corresponding code is displayed on the 7-segment LED array of the outdoor unit board or the service board.

Protection control code is displayed while a function is working, and goes out when released.

Indicated Contents

Indication	Protection Control Contents
P1	Pressure Ratio Protection Control
P2	High Pressure Increase Protection Control
P3	Inverter Current Protection Control
P4	Inverter Fin Temperature Increase Protection Control
P5	Discharge Temperature Increase Protection Control
P6	Low Pressure Decrease Protection Control
P9	High Pressure Decrease Protection Control
Pa	Demand Current Control
Pd	Low Pressure Increase Protection Control

2.12 Safety and Control Device Setting

2.12.1 Protection and Safety Control

Compressor Protection

Protect the compressor by the following devices and their combined device.

High Pressure Switch – If the discharge pressure of compressor exceeds the setting value, this switch will be cut off (tipped off).

Oil Heater – This band type heater protects against oil carry–over during cold starting, as it is energized while the compressor is stopped.

Fan Motor Protection

The automatic temperature controller is set in the motor coil of fan and can be automatically cut off (tipped off) if the temperature of coil of fan motor exceeds the setting value.

2.12.2 Safety and Control Device Setting

Model		RAS-070~120HNBRMQ2
High Pressure Switch		Automatic Reset, Non-Adjustable
Cut-Out	MPa	$4.15^{-0.05}_{-0.15}$
Cut-In	MPa	3.2±0.15
Crankcase Heater	W	80
CCP Timer Setting Time	Min	Non-Adjustable 3

2.13 Electrical Wiring Diagram

Turn OFF the main power switch to the indoor unit and the outdoor unit and wait for more than 10 minutes before electrical wiring work or a periodical check is performed.

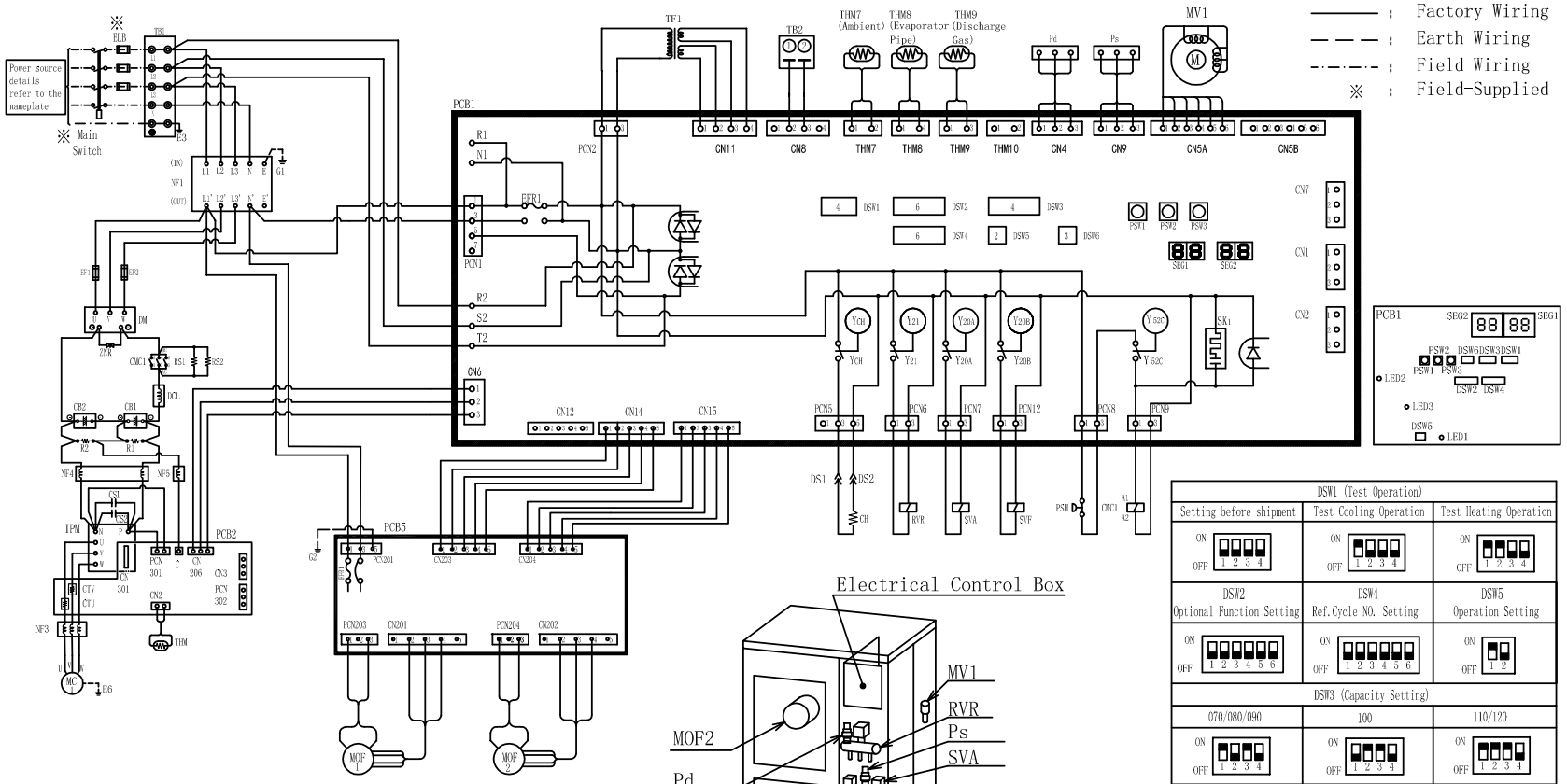

PCB1 SEG2 SEG1 PSW2 DSW6 DSW3 DSW1 PSW1 PSW3 LED2 DSW2 DSW4 LED3 DSW5 LED1

DSW1 (Test Operation)		
Setting before shipment	Test Cooling Operation	Test Heating Operation
ON OFF 1 2 3 4	ON OFF 1 2 3 4	ON OFF 1 2 3 4
DSW2 Optional Function Setting	DSW4 Ref.Cycle NO. Setting	DSW5 Operation Setting
ON OFF 1 2 3 4 5 6	ON OFF 1 2 3 4 5 6	ON OFF 1 2
DSW3 (Capacity Setting)		
070/080/090	100	110/120
ON OFF 1 2 3 4	ON OFF 1 2 3 4	ON OFF 1 2 3 4
DSW6 (Piping length Setting)		
Setting before shipment	The I.U. is located higher than O.U. (>20m)	The O.U. is located higher than I.U. (>25m)
ON OFF 1 2 3	ON OFF 1 2 3	ON OFF 1 2 3

SVA	Solenoid Valve for Hot Gas Bypass
SVF	Solenoid Valve for Backing Of Oil
TB1, 2	Terminal Board
TF1	Transformer
THM	Thermistor for FIN Temperature
THM7～9	Thermistor
ZNR	Surge Absorber
CS1, 2	Capacitor
CB1, 2	Capacitor
CH	Crankcase Heater
CMC1	Contactor for Compressor Motor
DCL	Reactor
DS1, 2	I.F.Connector
DM	Diode Module

MARK	NAME
IPM	Inverter System Power Podule
MC1	Motor for Compressor
MOF1, 2	Motor for Out Fan
MV1	Micro-Computer Control Expansion Valve
NF	Noise Filter
PCB	Printed Circuit Board
PSH	High Pressure Switch For Protection
Pd, s	Sensor for Refrigerant Pressure
PSW1～3	Push Switch on PCB1
DSW1～6	Dip Switch on PCB1
RVR	Reversing Valve
RS1, 2	Resistor for Starting
R1, 2	Resistor
EF1, 2	Fuse

2.14 Operation Range

This heat pump air conditioning has been designed for the following temperatures range. Operate the heat pump air conditioning within this range according to the table below.

Temperature DB: Dry Bulb, WB: Wet Bulb

		Maximum	Minimum
Cooling Operation	Indoor	23°C WB	15°C WB
	Outdoor	48°C DB	-5°C DB
Heating Operation	Indoor	30°C DB	15°C DB
	Outdoor	15.5°C WB	-23°C WB

2.15 Combination of Indoor Unit and Outdoor Unit

The range of the connectable indoor unit capacity ratio is 50%~130%.

*The connectable indoor unit capacity ratio can be calculated as follows:

Connectable Indoor Unit Capacity Ratio = Total Indoor Unit Capacity / Total Outdoor Unit Capacity.

The number of indoor units that can be connected to an outdoor unit is defined in the following table:

Outdoor Unit Type	Rated Capacity (kW)	Min. Total Capacity of the indoor units can be connected (kW)	Max. Total Capacity of the indoor units can be connected (kW)	Numbers of the indoor units can be connected(Q'ty)	Min. Capacity at Individual Operation (kW)
070	20.0	10.0	26.0	1(*1)~13	1.8
080	22.4	11.2	29.1	1(*1)~13	1.8
090	25.0	12.5	32.5	1(*1)~13	1.8
100	28.0	14.0	36.4	1(*1)~16(*2)	1.8
110	31.0	15.5	40.3	1(*1)~19(*2)	1.8
120	33.5	16.8	43.5	1(*1)~19(*2)	1.8

* 1 When only one indoor unit is connected, the connectable indoor unit capacity ratio must be 100%.

* 2 To ensure the heating performance in winter, the recommended number of the connectable indoor units should not exceed 13. If it exceeds, please contact your distributor or dealer.

NOTE:

(1) It is suggested that the total capacity of indoor units which are operated simultaneously should not exceed the capacity of outdoor units under the following conditions. Otherwise, there is a decrease in operating performance.

- ◆ When there are some round-way cassette indoor units and high wall indoor units in the system;
- ◆ When the outdoor air temperature is 43°C or more during the outdoor unit cooling operation;
- ◆ When the outdoor air temperature is lower than -10°C during the outdoor unit heating operation.

(2) For the same system, if the connectable indoor unit capacity ratio is over than 100%, and which all the indoor units operate simultaneously, capacity of every indoor unit should be less than its rated capacity.

OUTDOOR UNITS

2.16 Outdoor Unit Installation

2.16.1 Installation Location and Precautions

◆ When installing the unit into:

- A wall: Make sure the wall is strong enough to hold the weight of the unit. It may be necessary to construct a strong wood or metal frame to provide added support.
- A room: Properly insulate any refrigerant tubing run inside a room to prevent “sweating” that can cause dripping and water damage to wall and floors.
- Damp or uneven areas: Use a raised concrete pad or concrete blocks to provide a solid and level foundation for the unit to prevent water damage and abnormal vibration.
- An area with high winds: Securely anchor the outdoor unit down with bolts and a metal frame. Provide a suitable wall for wind prevention (field-supplied).
- A snowy area: Install the outdoor unit on a raised platform that is higher than drifting snow. Provide snow roof for snow prevention (field-supplied).

◆ Do not install the unit in the following places. Otherwise, it can result in an explosion, fire, deformation, corrosion, or product failure.

- Explosive or flammable atmosphere.
- Where a fire, oil, steam, or powder can directly enter the unit, such as in close proximity or directly above a kitchen stove.
- Where oil (including machinery oil) may be present.
- Where corrosive gases such as chlorine, bromine, or sulphide can accumulate, such as near a hot tub or hot spring.
- Where dense, salt-laden airflow is heavy, such as in coastal regions.
- Where the air quality is of high acidity.
- Where harmful gases can be generated from decomposition.

◆ Do not install the indoor unit where such dripping can cause moisture damage or uneven locations: Use a raised concrete pad or concrete blocks to provide a solid and level foundation for the unit to prevent water damage and abnormal vibration. Do not position the drain pipe for the indoor unit near any sanitary sewers where corrosive gases may be present.

◆ Before performing any brazing work, be sure that there are no flammable materials or open flames nearby.

◆ Perform a test run to ensure normal operation. Safety guards, shields, barriers, covers, and protective devices must be in place while the compressor/unit is operating. During the test run, keep fingers and clothing away from any moving parts.

◆ Clean up the site when finished, remembering to check that no metal scraps or bits of wiring have been left behind inside the unit being installed.

◆ After installation work for the system has been completed, explain the “Safety Precautions”, the proper use and maintenance of the unit to the customer according to the information in all manuals that came with the system. All manuals and warranty information must be given to the user or be left near the Indoor Unit.

◆ Select a direction where a strong wind does not blow to the air outlet surface or the air inlet surface.

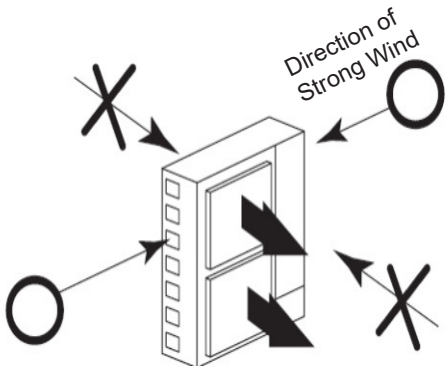

Air Outlet

- If a suitable location cannot be found, the windbreak wall or fence should be installation to prevent a strong wind blows to air inlet or outlet of the outdoor unit. And make sure to provide sufficient space around the outdoor unit for operation and maintenance.

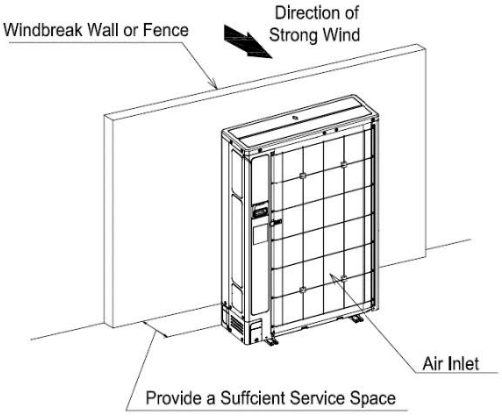

NOTES:

- If strong wind blows to the air outlet directly, the needed airflow volume cannot be maintained and the outdoor unit may be difficult to operate normally.
- If excessively strong wind blows to the air outlet consecutively, it may cause the propeller fan or the fan motor breakage by high speed rotation or overload.

2.16.2 Installation Work

(1) Secure the outdoor unit with the anchor bolts.

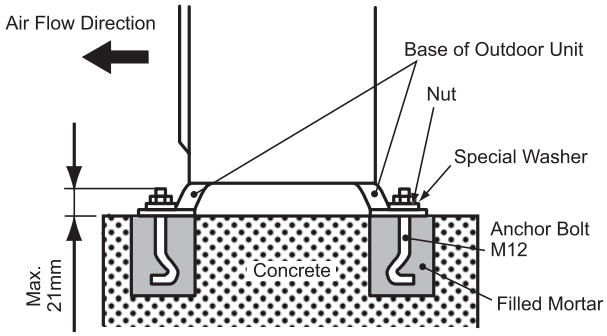

Fix the outdoor unit to the anchor bolts by special washer of field-supplied accessory.

(2) When installing the outdoor unit, fix the unit by anchor bolts.

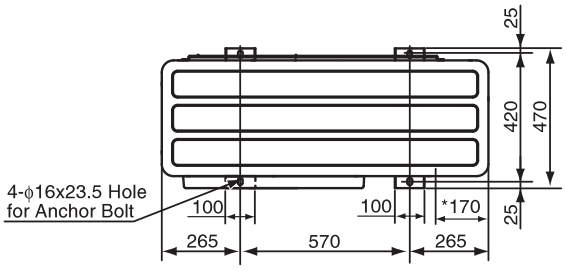

NOTE:
To avoid the interference between the piping construction at the bottom and the foundation,the dimension marked with * must be guaranteed.

OUTDOOR UNITS

(3) Example of fixing outdoor unit by anchor bolts.

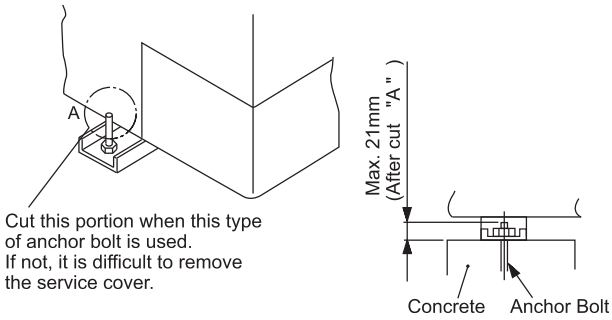

(4) Fix the outdoor unit firmly so that declining, making noise, and falling down by strong wind or earthquake is avoided.

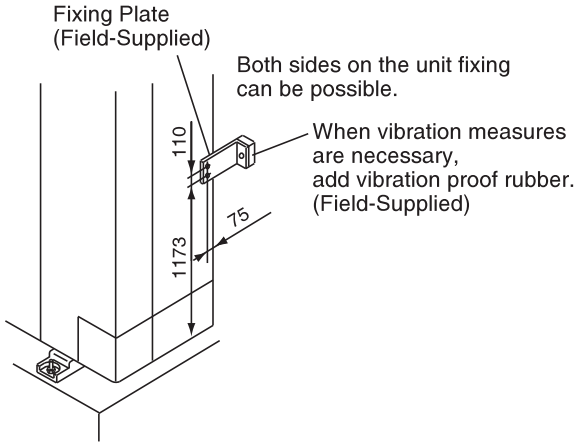

(5) The unit will condensate in heating mode. And the condensate will freeze in colder climates, which may cause the road slippery if not properly managed.

(6) The drain holes are working during the heating and defrosting operation. Choose a place where well drainage is available, or provide a groove for draining.

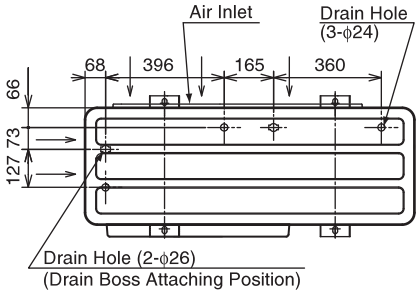

(7) The whole of the base of the outdoor unit should be installed on a foundation. When using vibration-proof mat, it should also be positioned the same way.
When installing the outdoor unit on a field-supplied frame, use metal plates to adjust the frame width for stable installation as shown below.

Incorrect

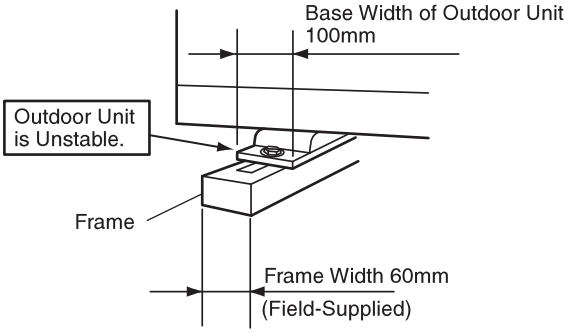

Correct

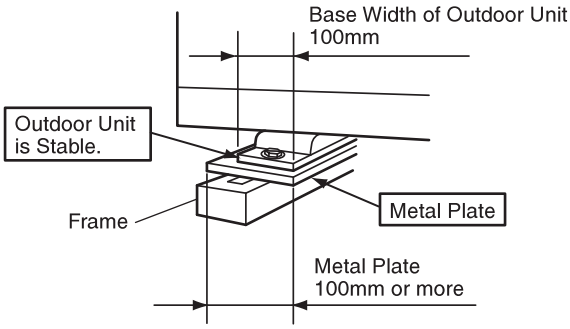

Recommended Metal Plate Size (Field-Supplied)

Material: Hot-Rolled Mild Steel Plate (SPHC)
Plate Thickness: 4.5T

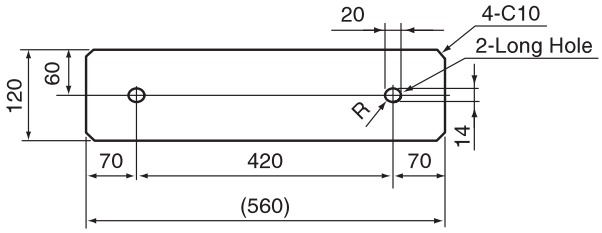

CAUTION

- Aluminum fins have very sharp edges, handle them carefully to avoid injuries.

NOTE:

- Install the outdoor unit on a roof or in an area where only service engineers come in contact with the outdoor unit.

OUTDOOR UNITS

2.17 Refrigerant Piping Work

WARNING

- The design pressure for this product is 4.15MPa. The pressure required for refrigerant R410A is 1.4 times higher than that of the refrigerant R22. That means that the refrigerant piping for R410A must be thicker than that for R22. Make sure to use specified refrigerant piping. Otherwise, the refrigerant piping may rupture due to an excessive refrigerant pressure. Pay close attention to the piping thickness when using copper refrigerant piping.
- Ensure that the stop valves are closed before removing the flare nut of the stop valves.

CAUTION

- When handling the refrigerant, be sure to wear leather gloves to prevent injuries.

2.17.1 Precaution for Refrigerant Piping

(1) Use the copper pipe for refrigerant piping.

(2) Keep the copper pipes clean. Make sure there is no dust or moisture inside the pipes. Blow nitrogen or dry, compressed air into the pipes to remove any dust or foreign materials before connecting them. Do not use any cutting tools such as a grinder or saw which could produce metal particles.

(3) Take special care to prevent pollution or moisture settling from going into the interior pipe during piping work.

(4) Avoid performing the piping connection work for outdoor unit in the rain.

(5) Refrigerant pipe ends

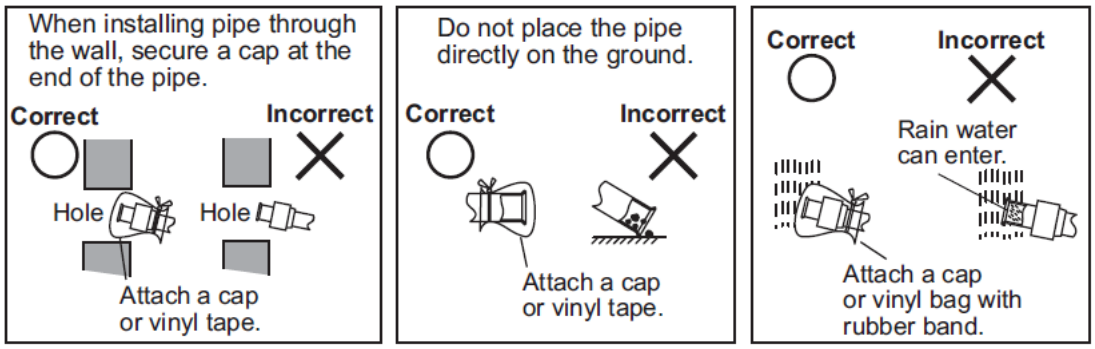

(6) Piping Thickness and Material

The thickness of refrigerant pipe differs depending on design pressure. For copper tube, pay attention to pipe selection, because the piping thickness differs depending on its material.

Diameter (Φd)	R410A	
	Thickness	Temper
6.35 mm	0.8 mm	O
9.52 mm	0.8 mm	O
12.7 mm	0.8 mm	O
15.88 mm	1.0 mm	O
19.05 mm	1.0 mm	1/2H
22.2 mm	1.2 mm	1/2H
25.4 mm	1.2 mm	1/2H

NOTES:

- Do not use the pipe with allowable pressure is less than 4.15MPa.
- The reference value of the refrigerant piping thickness is indicated in the table above.
- Do not use the pipe which is considerably different from the reference value.

(7) Cautions for Brazing Work

(A) For piping connections, complete non-oxidation brazing with a nitrogen charge. If brazing the pipes without the nitrogen substitution, a large amount of oxidized scaling will be generated in the piping. This oxidized scaling can cause clogging inside the expansion valve, solenoid valve, accumulator, and compressor, which can damage the unit.

Do not use field-supplied antioxidant which can corrode pipes and degrade the refrigerant oil.

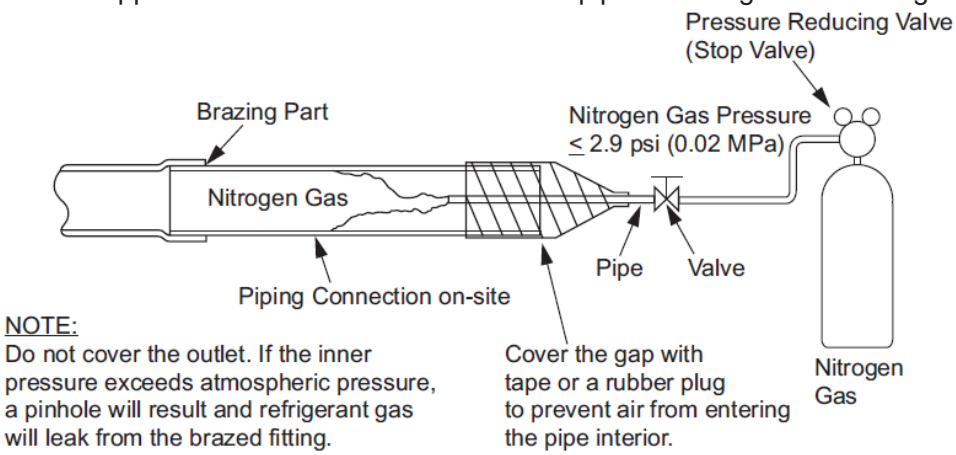

NOTES:

- ◆ Make sure to use nitrogen. Nitrogen gas pressure shall be 0.02 MPa or less.
- ◆ Make sure to use the pressure-reducing valve.
- ◆ Do not use field-supplied antioxidant.

(B) Use a type of flux with a low chlorine concentration.

NOTE: (C) Washing the weld joints to remove all flux completely after completing brazing work.

- ◆ To avoid oxidation and scaling, perform brazing at the appropriate temperature.

(D) To prevent gas leakage at the brazing connection, refer to the table for the insertion depth and the gap for joint pipe.

Unit: mm

Diameter (ΦD)	Min. Insertion Depth (B)	Gap (A - D)
5≤ D <8	6	0.05 - 0.35
8≤ D <12	7	
12≤ D <16	8	0.05 - 0.45
16≤ D <25	10	

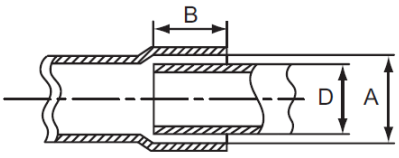

(8) Cautions for Flaring Work

(A) Perform the flaring work as shown below:

Unit: mm

Diameter (Φd)	$A^{+0}_{-0.4}$ R410A
6.35	9.1
9.52	13.2
12.7	16.6
15.88	19.7
19.05	(*)

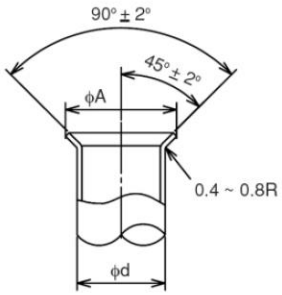

(*): It is impossible to perform flaring work with hard temper pipe. Use an accessory pipe with a flare.

OUTDOOR UNITS

(B) Joint Selection

The minimum thickness of joint and flare nut dimension are selected from the table below:

Minimum Thickness of Joint

Unit: mm

Diameter(Φd)	R410A
6.35	0.5
9.52	0.6
12.7	0.7
15.88	0.8
19.05	0.8

Flare Nut Dimension B

Unit: mm

Diameter(Φd)	R410A
6.35	17
9.52	22
12.7	26
15.88	29
19.05	36

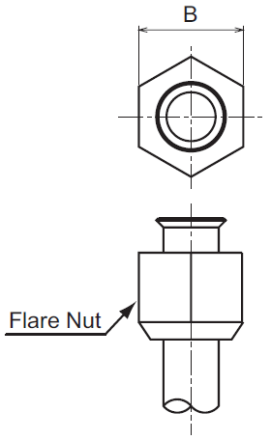

NOTE:

◆ Do not use a thin joint other than the ones shown in the table above.

(C) Verify that there are no scratches, metal particles, gaps, or deformations at the flared end before making connections to the system.

(D) Apply a little of refrigerant oil (field-supplied) on the flare surface of the pipe and flare nut before performing flaring work. Tighten the flare nut to specified torque settings using two wrenches. Perform flaring work to the liquid piping side before treating the gas piping side. Verify that no gas leakage has occurred after completing flaring work.

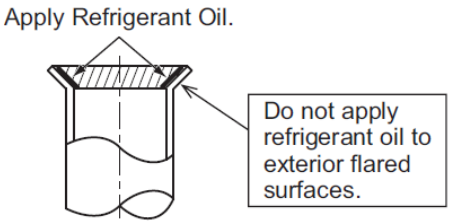

(E) Be sure to use two wrenches as shown.

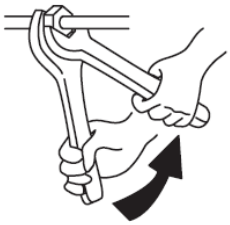

Use two wrenches as shown

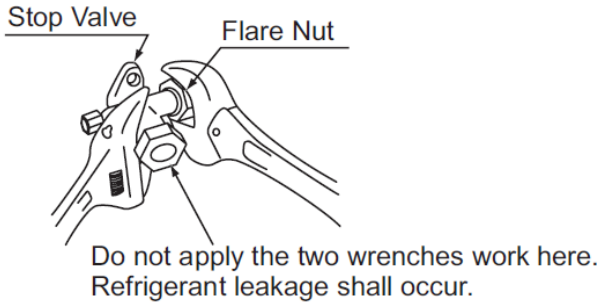

Tightening work for stop valve

Required Tightening Torque

Pipe Diameter(mm)	Tightening Torque
Φ6.35mm	20 N • m
Φ9.52mm	40 N • m
Φ12.7mm	60 N • m
Φ15.88mm	80 N • m
Φ19.05mm	100 N • m

2.17.2 Model of Branch Pipe

(1) E-102SN

Model	E-102SN Unit: mm
Gas Pipe	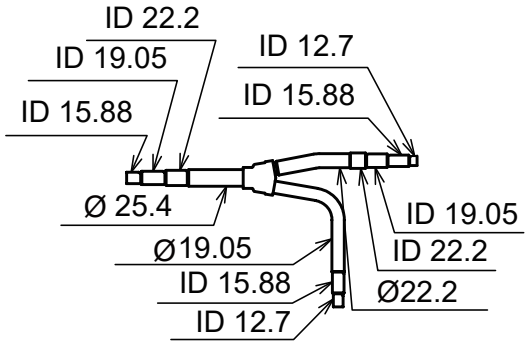
Liquid Pipe	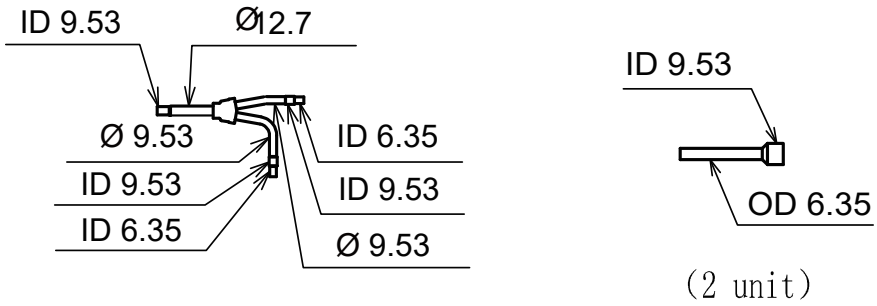

(2) E-162SN

Unit: mm

Model	E-162SN
Gas Pipe	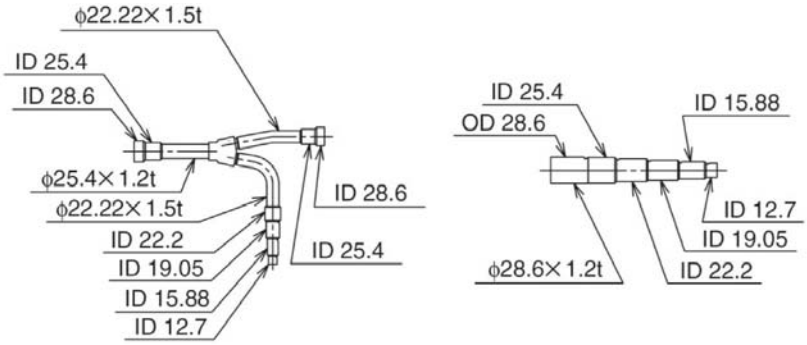
Liquid Pipe	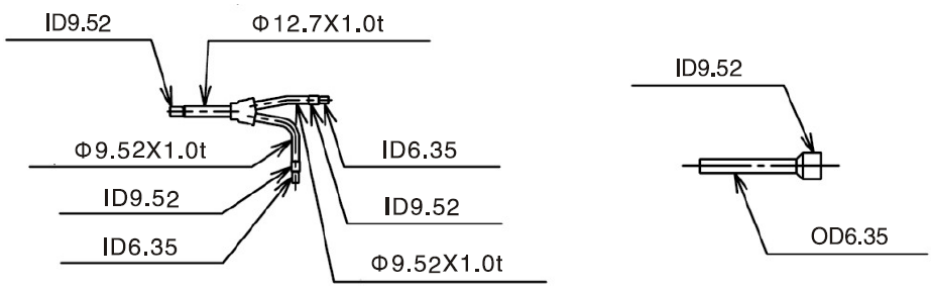

OUTDOOR UNITS

(3) Precaution for branch pipe connection

Use the branch pipe to connect the outdoor/indoor units. Mounted the branch pipes to a pillar, a wall, or a ceiling. Keep the inlet pipe of the branch pipe straight, and the length of the straight pipe is no less than 0.5 meter.

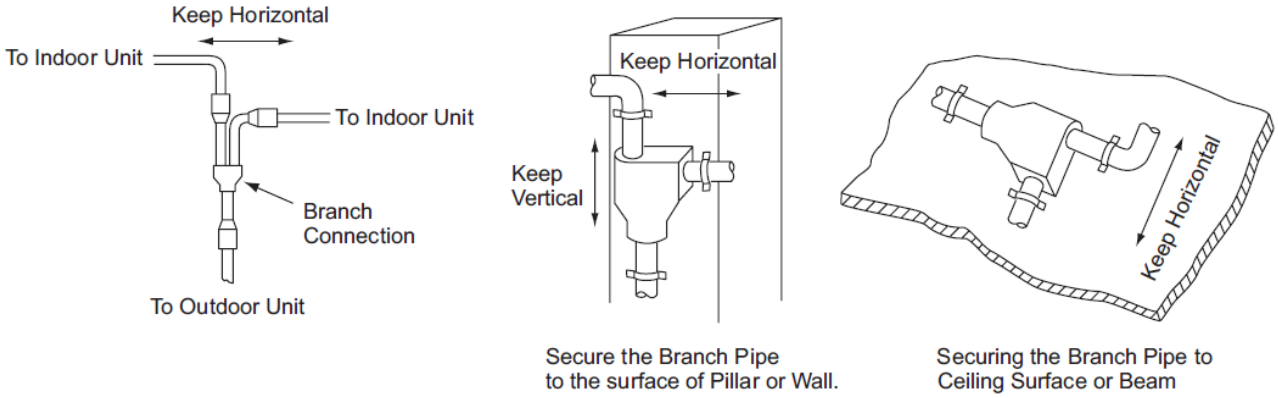

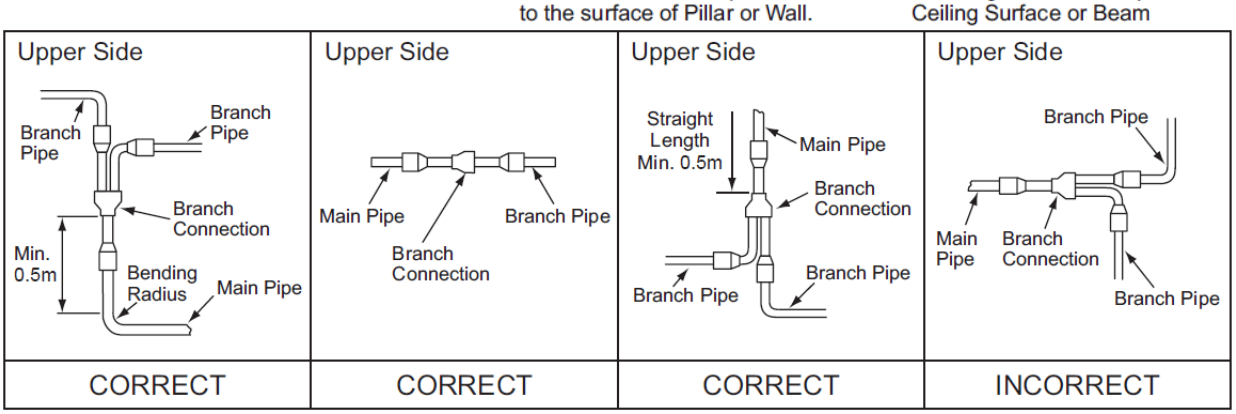

2.17.3 Refrigerant Piping Size

Example of connection: connection of 4 indoor units.

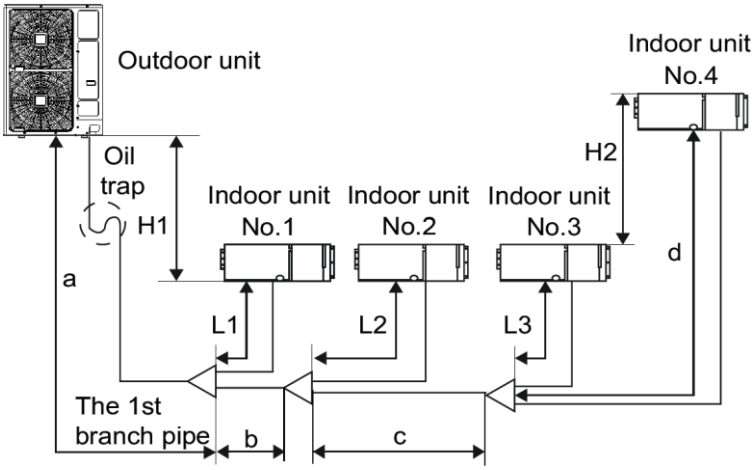

Piping Size of Main Pipe

Model	Stop Valve(mm)		Pipe between the outdoor unit and the 1st branch pipe(a); The pipes between the branch pipes(b,c).		
	Gas	Liquid	Gas	Liquid	Marks
RAS-070~090HNBRMQ2	Φ19.05	Φ9.52	Φ19.05	Φ9.52▲	a; b; c
RAS-100HNBRMQ2	Φ19.05	Φ12.7	Φ22.2*	Φ12.7	a; b; c
RAS-110~120HNBRMQ2	Φ19.05	Φ12.7	Φ25.4*	Φ12.7	a; b; c

NOTE:

- Mark "▲" represent that if the liquid pipe length between the outdoor unit and the 1st branch pipe(a) is over 70 meters, the diameter of pipes(a,b,c) should be up size. The Φ9.52 diameter pipe is converted to Φ12.7 diameter pipe.
- Mark " * " represent that there is a pipe adapter in the outdoor unit, which is used to adjust the gas pipe between the outdoor unit and the 1st branch pipe. Thus the Φ19.05 diameter pipe is converted to Φ22.2 diameter pipe in the model of RAS-100HNBRMQ2, and the Φ19.05 diameter pipe is converted to Φ25.4 diameter pipe in the model of RAS-110~120HNBRMQ2.

Piping Size of Indoor Unit

Indoor Unit Type	Model	Gas Pipe(mm)	Liquid Pipe (mm)	Marks
Compact Ducted Medium ESP Ducted High ESP Ducted	18~45	Φ12.7	Φ6.35	L1; L2; L3; d
	50~56	Φ15.88	Φ6.35	L1; L2; L3; d
	63~160	Φ15.88	Φ9.52	L1; L2; L3; d
Round-way Cassette	22~63	Φ12.7	Φ6.35	L1; L2; L3; d
	71~160	Φ15.88	Φ9.52	L1; L2; L3; d

Piping Work Conditions

Item		Marks	Allowable Piping Length
Maximum Piping Length (Liquid Pipe)	Between the outdoor unit and the farthest indoor unit	a+b+c+d	≤100 meters
	Total liquid pipe length	a+b+c+d+L1+ L2+L3	≤180 meters
	Between the 1st branch pipe and the farthest indoor unit	b+c+d	≤40 meters
	Between branch pipes and connected indoor units	L1，L2，L3，d	≤15 meters
Allowable Height Difference	Outdoor unit is higher than indoor unit	H1	≤50 meters
	Outdoor unit is lower than indoor unit	H1	≤40 meters
	Height difference between indoor units	H2	≤15 meters
Others	Setting requirement for oil trap	When the gas pipe is lifted over than 10 meters interval, one oil trap should be set.	

The model of branch pipe

Model	Liquid pipe length between the outdoor unit and the1st branch pipe(a)	
	⩽70 meters	＞70 meters
070~090	E-102SN	E-162SN
100~120	E-162SN	

OUTDOOR UNITS

2.17.4 Refrigerant Piping Work for Outdoor Unit

(1) The refrigerant piping can be installed in four directions (front, right, bottom or rear side) as shown in the following figures.

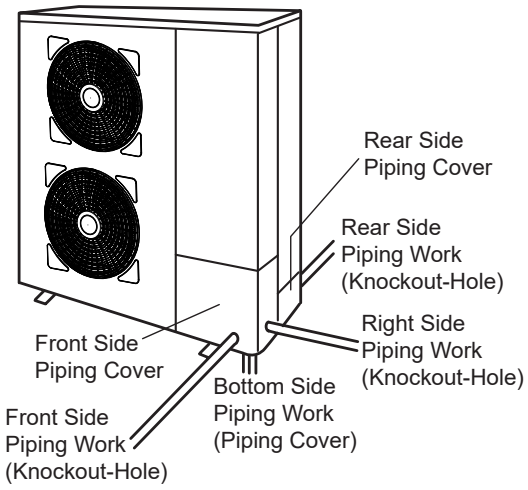

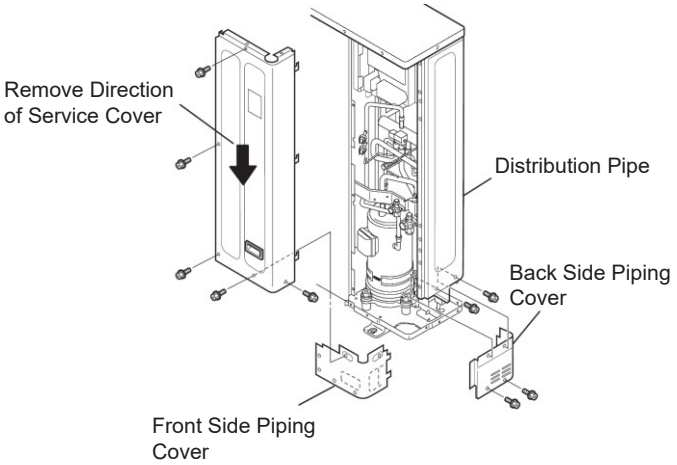

Attention for Removing Service Cover

– Procedures of Removing Cover –

1) Remove the screws according to the figure above.

Note:
Remove the screws and hold the service cover with your hands. If not, the service cover may fall down.

2) Slowly push the service cover downward.

(2) Securely use two wrenches at the following position when removing or installing the pipe. (If not, refrigerant leakage may occur.)

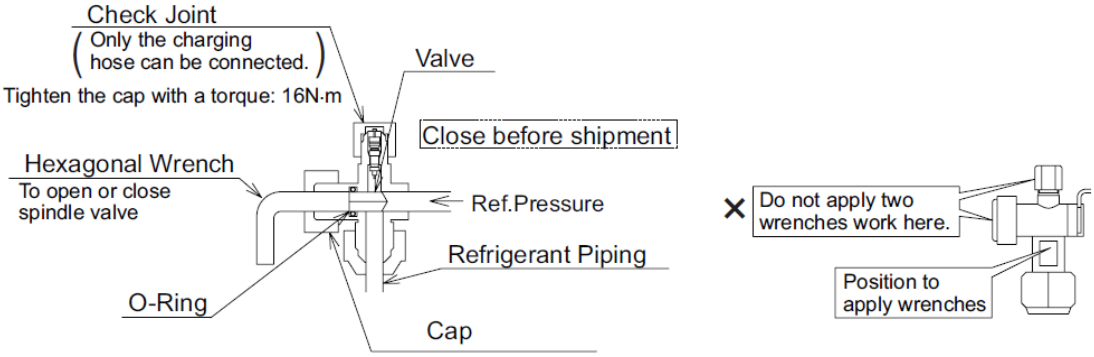

Controlling torque of hexagonal wrench

Model	Gas side stop valve	Liquid side stop valve
070~120	9~11 N·m	7~9 N·m

(3) If the direction of the refrigerant piping has been chosen, please remove the piping cover from the unit, punch out the holes following the guide line with a screwdriver and a hammer. Then, deburr the holes and attach insulation (field-supplied) for protection of cables and pipes.

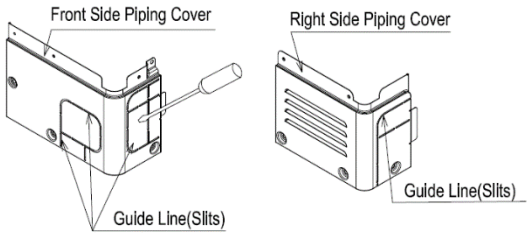

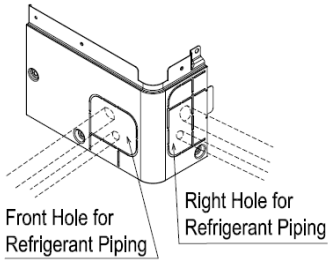

(a)Front and Right Side Piping Work

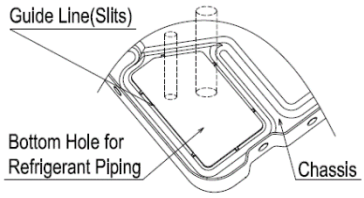

(b) Bottom Side Piping Work

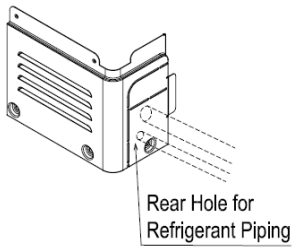

(c) Rear Side Piping Work

NOTICE

- Protect cables and refrigerant pipes from the edges of the holes with insulations, and so on. (Field-supplied).
- Prevent the cables contacting with the refrigerant piping and the hot components of the unit directly.
- For the right side and rear side piping work, secure enough space for the piping.

(4)Be sure to attach the piping cover to prevent rain water entering the unit. Completely seal the penetration parts of the pipes with field-supplied insulation in order to prevent rain water entering the unit.

(5)Use a pipe bender or an elbow (field-supplied) for bending work while connecting pipes.

OUTDOOR UNITS

2.18 Additional Refrigerant Charge Calculation

Although this unit has been charged the refrigerant, additional refrigerant charge is required on the site. Determine additional quantity of refrigerant required according to the following table, and charge it into the system.

(1) Calculating the method of Additional Refrigerant Charge

Model	Item	Contents					Total Additional Charge
RAS-070~120 HNBRMQ2	For the refrigerant pipes	Pipe diameter	Symbol	Total length of liquid piping (meter)	Refrigerant charge per meter	Additional charge (kg)	W=W11+W12 +W13
		Φ6.35	W11=		×0.03kg/m=		
		Φ9.52	W12=		×0.07kg/m=		
		Φ12.7	W13=		×0.12kg/m=		
	For the Indoor units	0					

NOTE:

◆ Ensure the total additional charge should not exceed the max. additional refrigerant charge quantity.

(2) Max. Additional Refrigerant Charge Quantity

Outdoor Unit	RAS-070~120HNBRMQ2
Max. Additional Refrigerant Charge Quantity (kg)	13.5

(3) Refrigerant Charge Amount of Outdoor Unit before Shipment.

Outdoor Unit	W_0（kg）
RAS-070~090HNBRMQ2	5.6
RAS-100HNBRMQ2	7.0
RAS-110~120HNBRMQ2	9.0

NOTE:

◆ W0 is outdoor unit refrigerant charge before shipment.

(4) Record of Additional Charge

The total refrigerant charge of the system should be calculated in the following formula.

Total of Refrigerant Charge	=	W	+	W_0				Total Additional Charge: W ☐ kg Total Ref. Charge: ☐ kg Date of Ref. Charge Work: ☐ / ☐ / ☐
The system	=		+		=		kg	

NOTE:

- Special Attention Regarding Refrigerant Gas Leakage

Pay attention to the critical gas concentration to avoid accidental refrigerant gas leakage before installing air conditioning systems.

$$\frac{\text{R: Total Quantity of Charged Refrigerant (kg)}}{\text{V: Room Volume (m}^3\text{)}} \leq \text{C: Critical Concentration (0.42kg/m}^3\text{)}$$

* This value should be decided according to the each country's regulation such as ISO5149,EN378 and ASHRAE Standard 15. In the case that the calculated critical concentration is higher than this value, take the following actions:

1) Provide a gas leakage detector and exhaust fan controlled by its gas leakage detector.

2) Provide effective opening in the wall or door for ventilation to next door so that the critical gas concentration can be maintained lower than the above value. (Provide an opening with area greater than 0.15% of the floor surface at the lower part of a door.)

CAUTION

1. Maximum Permissible Concentration of HFC GAS R410A

   The refrigerant R410A is an incombustible and non-toxic gas.

   However, if leakage occurs and gas fills a room, it may cause suffocation.

   Once leakage occurs, it is a must to take effective actions to make the concentration of R410A lower than 0.42 kg/m^3.
2. Calculation of Refrigerant Concentration

   (1) Calculate the total quantity of refrigerant R (kg) charged in the system connecting all the indoor units of target rooms.

   (2) Calculate the volume of the room installing this unit V (m^3).
3. Calculate the refrigerant concentration C (kg/m^3) of the room according to the above equation.

   Please follow local codes or regulations, if any.

2.19 Electrical Wiring

WARNING

- ◆ Turn off the main power switch to the indoor unit and the outdoor unit, then wait for more than 10 minutes before electrical wiring work or a periodical check is performed.
- ◆ Ensure that the indoor fan and the outdoor fan have been stopped before electrical wiring work or a periodical check is performed.
- ◆ Protect the wirings, electrical parts from rats or other small animals. If not, rats may gnaw at unprotected parts and which may lead to a fire.
- ◆ Avoid the wirings from touching the refrigerant pipes, plate edges and electrical parts inside the unit. If not, the wirings will be damaged and a fire may be happened.
- ◆ Secure the cables. External forces on the terminals can lead to a fire.

NOTICE

- ◆ The indoor unit fan may continue to operate for up to five minutes following the heating cycle to dissipate residual heat from the indoor unit.

2.19.1 General Check

(1) Make sure that the field-supplied electrical components (main power switches, circuit breakers, wires, conduit connectors and wire terminals) have been properly selected according to the electrical characteristics indicated in the table next page. Make sure that the components comply with the local national standards and rules.

- ◆ Supply electrical power to each outdoor unit. An ELB (Earth Leakage Breaker), fuse and main switch should be used for each outdoor unit. If not, it will be cause of fire or electrical shock.

(2) Ensure that the power supply voltage is within ±10% of the rated voltage. If the power supply voltage is too low, the system cannot start due to the voltage drop.

(3) Check the size of the electrical wires.

(4) Ensure that the ground wiring for the outdoor unit and indoor unit are connected. If not, it will cause a fire or an electrical shock.

(5) Communication cabling shall be a minimum of 0.75mm^2, 2-Conductor, Stranded Copper. Shielded cable must be considered for applications and routing in areas of high EMI and other sources of potentially excessive electrical noise to reduce the potential for communication errors. When shielded cabling is applied, proper bonding and termination of the cable shield is required as per guidelines. Plenum and riser ratings for transmission cables must be considered per application and local code requirements.

- In case of where the power source for the air conditioning is supplied from the same power transformer as the device with high electricity consumption*.
- In case of where the power supply wiring for the device* and for the air conditioning are located close to each other.

* Example: Lift, container crane, rectifier for electric railway, inverter power device, arc furnace, electric furnace, large-sized induction motor, and large-sized switch.

In the instances mentioned above, an induction surge of the power supply wiring for the air conditioning could occur due to a rapid change in electricity consumption of the device and activation of the switch. Therefore, check the field regulations and standards before performing electrical work in order to protect the power supply wiring for the air conditioning.

Electrical Data and Recommended Characteristics

Model	Power Source	Maximum Running Ampacity (A)	Power Supply Wiring (Cores×mm^2)	Transmission cable (Cores×mm^2)	ELB	
					Rated Ampacity (A)	Rated Sensitive Ampacity (mA)
RAS-070~090 HNBRMQ2	380~415V 3N~ 50Hz	20.5	3×4.0	2×0.75	25	30
RAS-100~120 HNBRMQ2		26.0	3×6.0	2×0.75	32	30

2.19.2 Electrical Wiring Connection

Connect the electrical wiring according to the following figures:

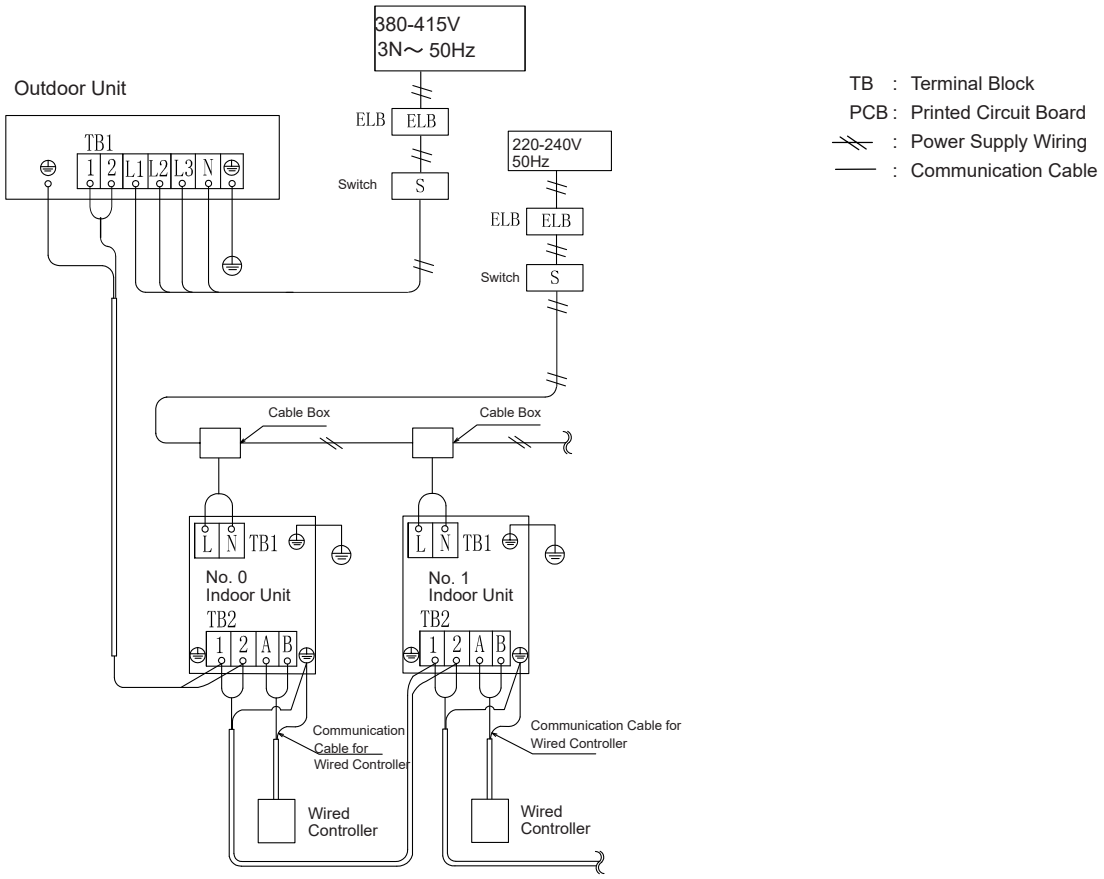

(1)Connect the power supply wirings to the terminal block TB1 and ground wiring to the terminal in the electrical control box. The ELB (Earth leakage breaker), FUSE and S (Main switch) must be installed to the each power source of outdoor unit.

(2) Connect the transmission cables between the outdoor unit and indoor units to the terminals 1 and 2 on the terminal block. The transmission cables must be made from the shielded twist pair cabling, proper bonding and termination of the cable shield is required as per guidelines. The installation must be considered per application and local code requirements. Transmission cable shall be a minimum of 0.75mm^2, 2-Conductor, Stranded Copper.

(3) Connect the transmission cables between the indoor unit and wired controller to the terminals A and B on the terminal block.

(4) The transmission cable should be separated from the power supply wiring.

Keep at least 5cm between the transmission cable and the power supply wiring, and also min. 1.5m between the transmission cable and power supply wiring for other electrical devices. If it is not secured, put the power supply wiring into the metal conduit tube to separate from other wirings.

(5) Do not connect the power supply wiring to the terminals 1 and 2 on the terminal block for transmission wiring. Otherwise, printed circuit board may be damaged.

(6) Connect the ground wire for the outdoor/indoor units. The ground wiring work under the condition of 100Ω (max.) ground resistance should be performed by the qualified person.

(7) Tighten screws for the terminal block according to the following table:

Size	Tightening Torque
M4	1.0~1.3 N·m
M5	2.0~2.5 N·m
M6	4.0~5.0 N·m
M8	9.0~11.0 N·m
M10	18.0~23.0 N·m

WARNING

- The ELB (Earth leakage breaker), FUSE and S (Main switch) must be installed to the each power source of outdoor unit and indoor units. If not, it may cause of an electrical shock or fire.
- Perform the electrical work according to the regulations of each region and this installation and maintenance manual. A separate, dedicated electrical circuit must be used. If the electrical wiring work is performed incorrectly or there is a capacity shortage of the power circuit, it will cause an electric shock or fire.
- Check that the ground wire is securely connected. Otherwise, it may lead to an electrical shock. Do not connect the ground wiring to gas piping, water piping, lightning conductor, or telephone ground wirings.
- In the electrical wiring connection, do not connect the live wires (L1/L2/L3) to the terminals N of the terminal block TB1. Otherwise, printed circuit board may be damaged.

OUTDOOR UNITS

2.19.3 Electrical Wiring for Outdoor unit

Avoid the wirings from touching the refrigerant pipes, plate edges and electrical parts inside the unit.
If not, the wirings will be damaged and a fire may occur.

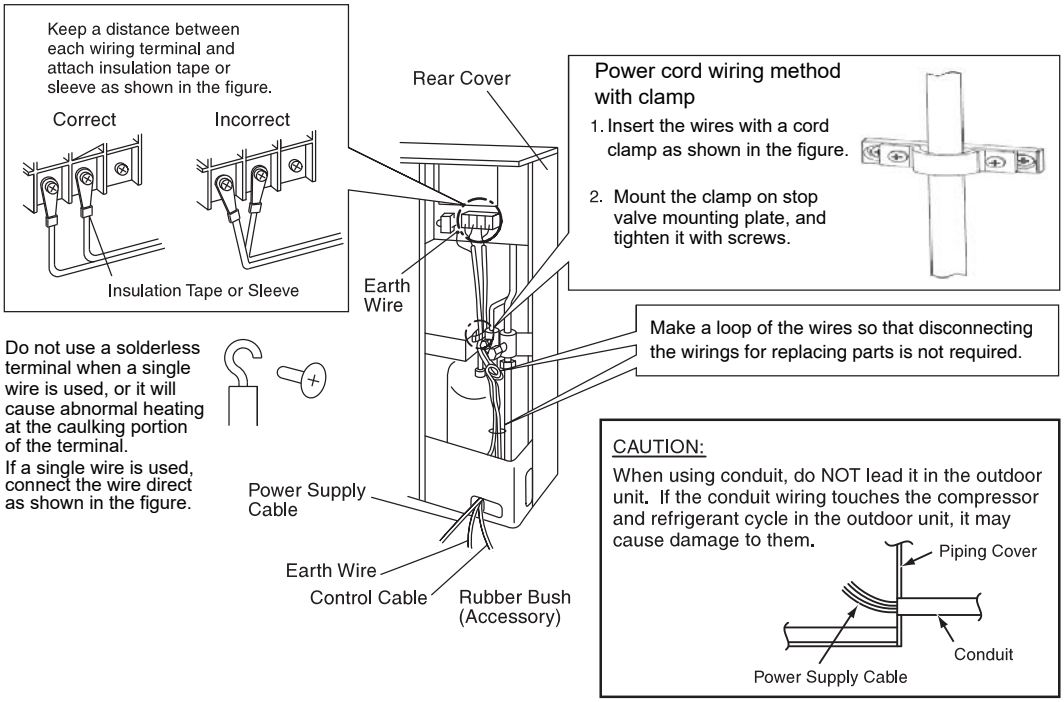

NOTES:

(1) Perform all the electrical work in accordance with this manual and in compliance with the local regulations and safety standards. The electrical wiring should be applied by the qualified person.

(2) The recommended electrical characteristics are calculated by the related safety standards, and the environment temperature is less than 40°C, the length of the power supply wire is no more than 15 meters. If the air conditioning is in an extreme environments, please calculate the electrical characteristics again.

(3) If the distribution box or pull box is adopted to the power supply for air conditioning, the size of the power supply wire should be chosen according to the following table.

Total Ampacity (A)	Power Supply Wiring (mm^2)	
I≤6	2.5	※1: If the total ampacity is over than 63A，the power supply wires must not be connected in series.
6<I≤10	2.5	
10<I≤16	2.5	
16<I≤25	4	
25<I≤32	6	
32<I≤40	10	
40<I≤63	16	
63<I	※1	

(4) The power supply wire should be stranded copper with shielding by neoprene.

(5) The transmission cables must be made of the shielded twist pair cabling, and the shielded should be connected to the ground.

(6) If the power supply wiring or the transmission cable is damaged, please turn off the power supply and contact the service dealer.

(7) The ELB (Earth leakage breaker) must be installed to each power source of outdoor unit and indoor units. The distance between the terminals of the ELB should be more than 3 mm.

(8) When connecting the power supply wirings, it is better that the ground wire should be longer than the live and neutral wires.

3. Selection Data

3.1 Unit Nomenclature

Unit Nomenclature for Outdoor Unit

Digit	Example	Description
1~3	RAS	Outdoor Unit(Separated Type)
4	070	Capacity(HP*10)
5	H	Air Cooling/Heat Pump System
6	N	Refrigerant Type(N:R140A)
7	B	Generation
8	R	SET FREE mini-HNRQ Series
9	M	Power Supply(K:220~240V/1Ph/50Hz,M:380~415V/3Ph/50Hz)
10	Q	HAPQ
11	2	Product Version

3.2 Selection Guide

(1) Given Condition (Example)

◆ Estimated Load

Item		Room 1	Room 2	Room 3
Estimated Cooling Load	kW	3.5	3.5	4.1
Estimated Heating Load	kW	3.3	3.3	4.0

◆ Temperature Condition

Cooling	Heating
Outdoor Coil Air Inlet: Dry Bulb: 35°C Indoor Coil Air Inlet: Dry Bulb: 24°C Wet Bulb: 17°C	Outdoor Coil Air Inlet: Dry Bulb: 6°C Wet Bulb: 5°C Indoor Coil Air Inlet: Dry Bulb: 20°C

◆ Altitude Condition: 305m

Equivalent Piping Length between Indoor Units and Outdoor Unit: 60m

Piping Lift: 8m

Power Supply: 50Hz

(2) Selecting Matching Indoor Units and Nominal Capacity

Select Compact Ducted Type Indoor Units (Example)

Item		Room 1	Room 2	Room 3	Total
Selected Model		RPIZ-1.6HN GUAQ	RPIZ-1.6HN GUAQ	RPIZ-1.8HN GUAQ	
Nominal Cooling Capacity	kW	4.5	4.5	5.0	14.0
Nominal Heating Capacity	kW	5.0	5.0	5.6	15.6

Select Outdoor Unit RAS-5.0HNBRKQ(Example)

Item		Outdoor Unit
Selected Model		RAS-5.0HNBRKQ
Nominal Cooling Load	kW	14.0
Nominal Heating Load	kW	16.0

(3) Actual Capacity

In the example, the total indoor unit cooling capacity is 14.0kW, and outdoor unit cooling capacity is 14.0kW. Therefore, the connected indoor unit capacity ratio is 100%.

(A) Actual Capacity of Outdoor Unit

Maximum Actual Capacity of Outdoor Unit

= ① Outdoor Unit Capacity According to Connected IDU Capacity Ratio × ② Outdoor Unit Capacity According to Temperature Condition ×③ Correction Factor According to Piping Length and Lift × ④ Correction Factor According to Defrosting Operation (only heating)

Item	①	②	③	④	⑤
Cooling	14.0kW	12.6/14	0.87	1.0	0.97
Heating	15.6kW	15.5/16	0.96	0.95	0.97
Note	Section 3.3	Section 3.4	Section 3.5	Section 3.6	Section 3.7

Maximum Actual Capacity of Outdoor Unit:

Cooling = 14× (12.6/14) × 1.0×0.97 = 12.2kW

Heating = 15.6 × (15.5/16) × 0.96 × 0.95 × 0.97 = 13.4

(B) Actual Capacity of Each Indoor Unit

Actual Capacity of Each Indoor Unit= Actual Capacity of Outdoor Unit × Each Indoor Unit Capacity ÷ Summation of Indoor Units Capacity

Result:

Item			Room 1	Room 2	Room 3	Total
Selected Model			RPIZ-1.6HN GUAQ	RPIZ-1.6HN GUAQ	RPIZ-1.8HN GUAQ	
Actual Capacity	Actual Maximum Cooling Capacity	kW	3.9	3.9	4.4	12.2
	Actual Maximum Heating Capacity	kW	4.3	4.3	4.8	13.4
Design Load	Estimated Cooling Load	kW	3.5	3.5	4.1	11.1
	Estimated Heating Load	kW	3.3	3.3	4.0	10.6

3.3 Outdoor Unit Capacity According to Connected IDU Capacity Ratio

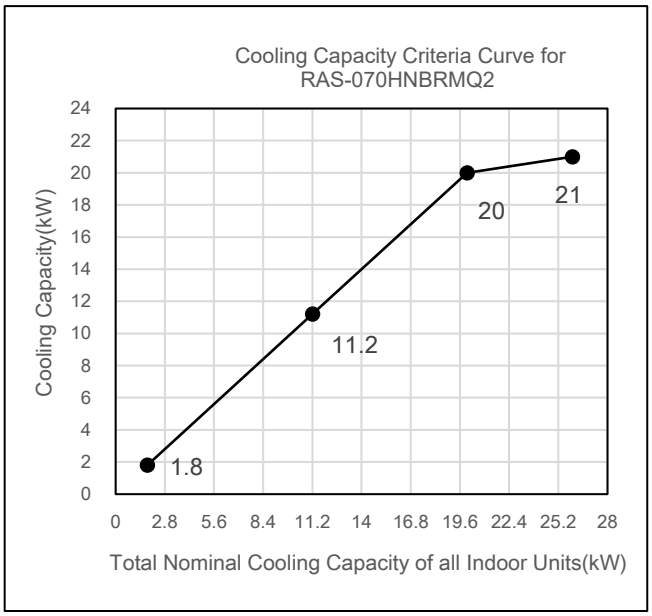

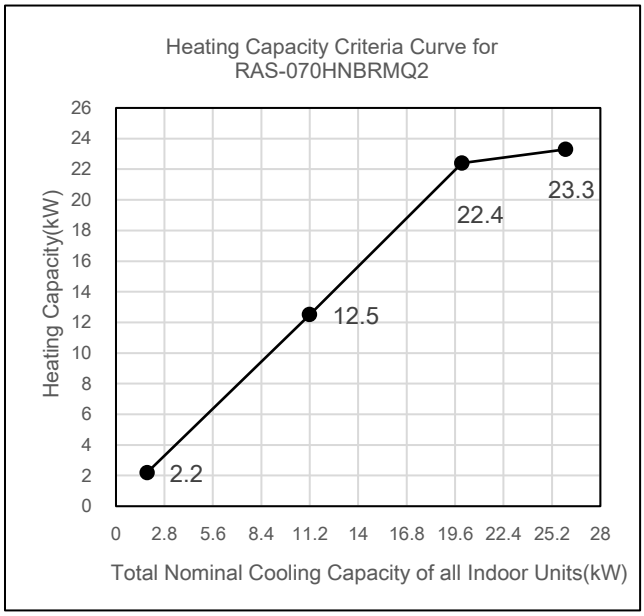

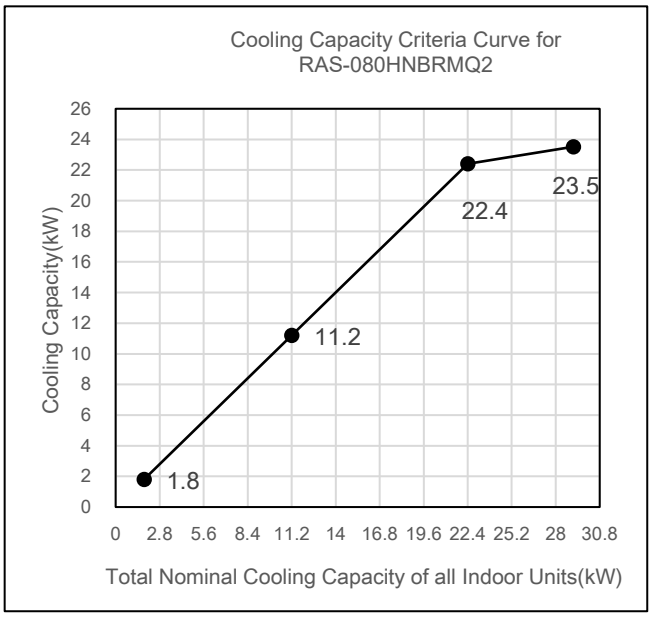

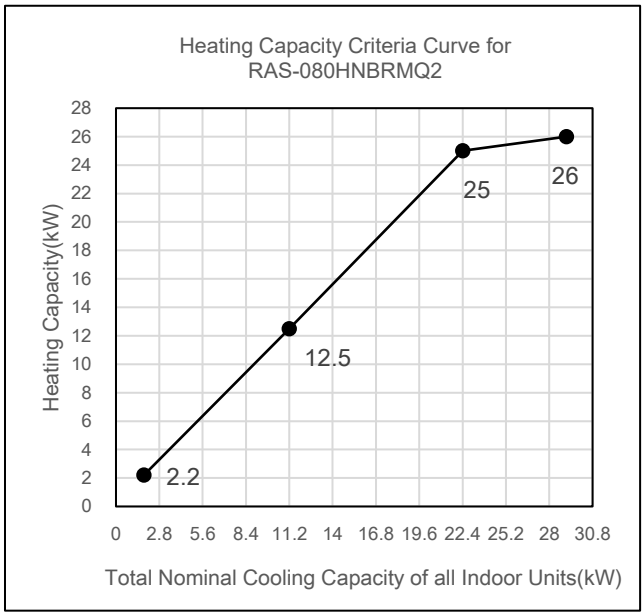

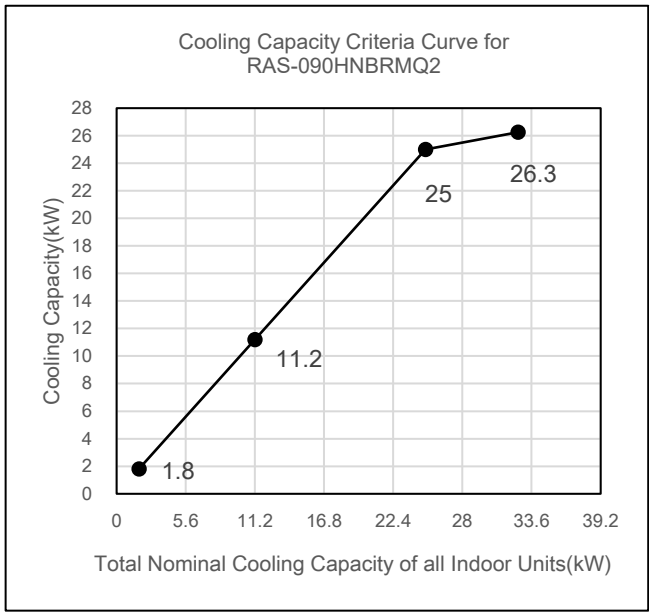

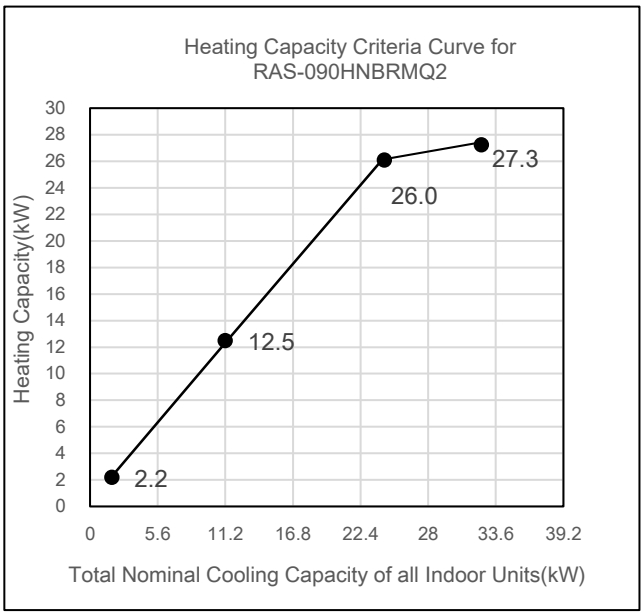

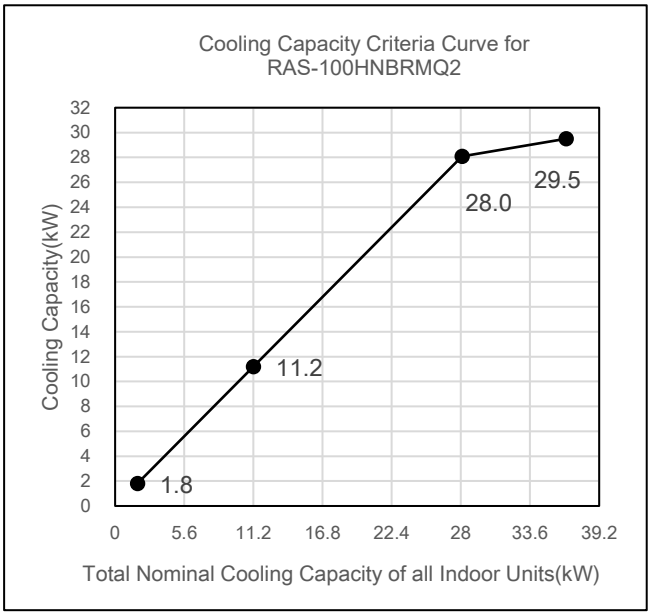
Cooling Capacity Criteria Curve for
RAS-100HNBRMQ2
Cooling Capacity(kW)
Total Nominal Cooling Capacity of all Indoor Units(kW)
1.8
11.2
28.0
29.5

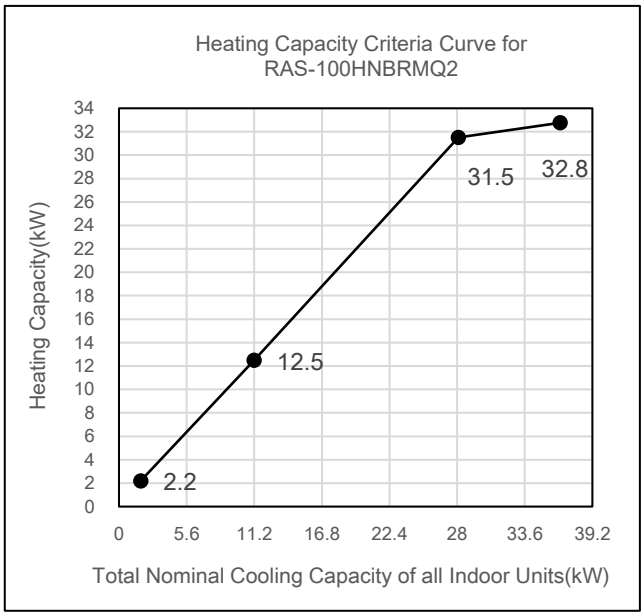
Heating Capacity Criteria Curve for
RAS-100HNBRMQ2
Heating Capacity(kW)
Total Nominal Cooling Capacity of all Indoor Units(kW)
2.2
12.5
31.5
32.8

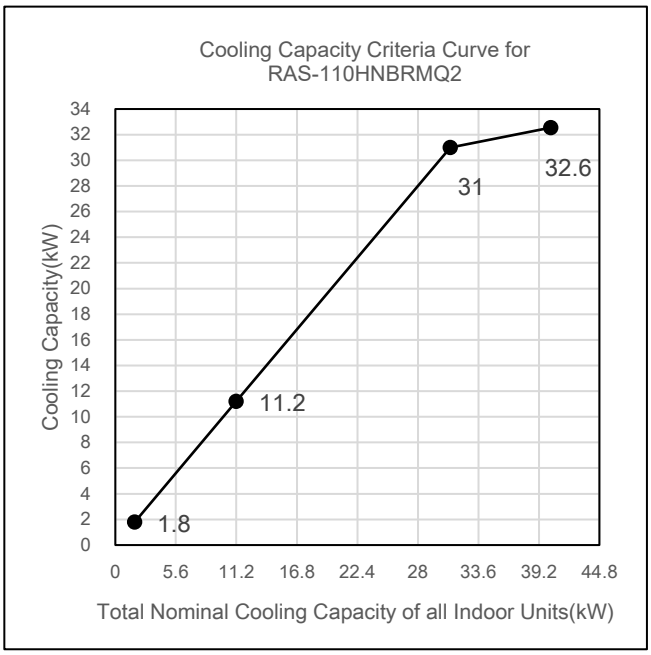
Cooling Capacity Criteria Curve for
RAS-110HNBRMQ2
Cooling Capacity(kW)
Total Nominal Cooling Capacity of all Indoor Units(kW)
1.8
11.2
31
32.6

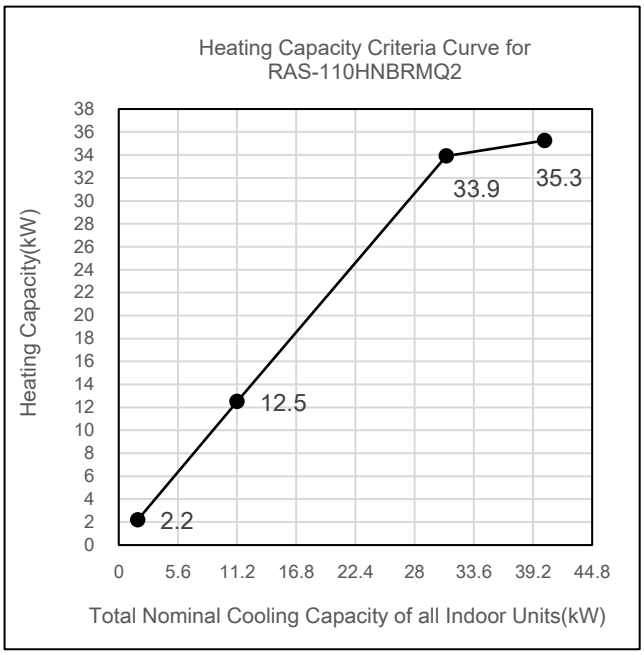
Heating Capacity Criteria Curve for
RAS-110HNBRMQ2
Heating Capacity(kW)
Total Nominal Cooling Capacity of all Indoor Units(kW)
2.2
12.5
33.9
35.3

SELECTION DATA

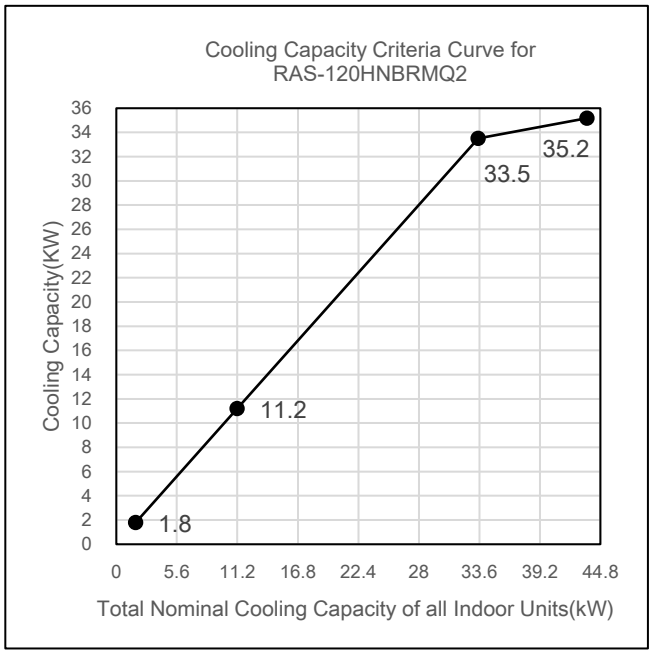

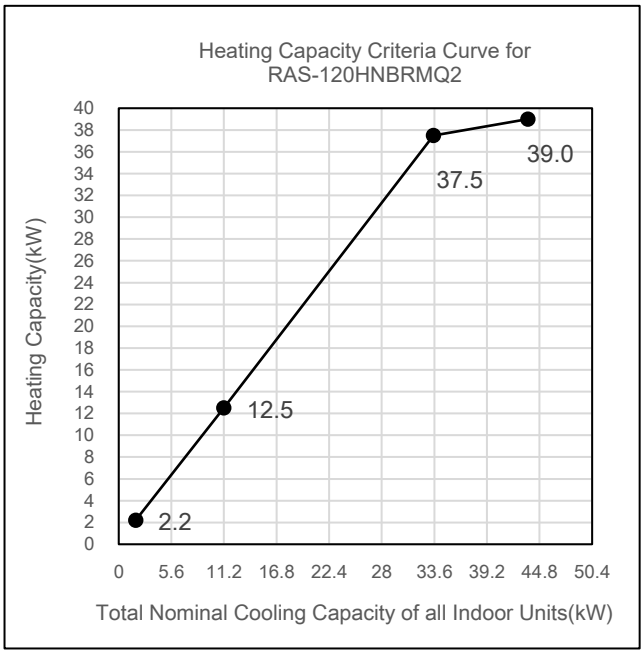

NOTES:

(1)The capacity are tested under the following working conditions.

- Working condition for cooling:
  Indoor temperature: 27°C DB/19°C WB; Outdoor temperature: 35°C DB
- Working condition for heating:
  Indoor temperature: 20°C DB; Outdoor temperature: 7°C DB/6°C WB
- Pipe length: 10m; Pipe lift: 0m

(2) In some cases, the value may change due to the compressor protection control.

(3) The heating capacity on the table indicates the peak value, which does not include the capacity decrease caused by frost.

3.4 Outdoor Unit Capacity According to Temperature Condition

◆ Cooling

Cooling Capacity for RAS-070HNBRMQ2 Unit:kW

Outdoor temperature (℃ DB)	Indoor airlet temperature (℃ WB)						
	14	16	18	19	20	22	24
24	18.4	19.2	20.5	21.3	22.1	23.5	24.4
28	17.8	18.7	20.2	20.9	21.7	23.0	23.9
32	17.2	18.3	19.5	20.1	20.9	22.4	23.6
35	17.0	18.0	19.3	20.0	20.6	22.0	23.0
40	16.2	17.2	18.4	19.2	19.8	21.2	22.1

Cooling Capacity for RAS-080HNBRMQ2 Unit:kW

Outdoor temperature (℃ DB)	Indoor airlet temperature (℃ WB)						
	14	16	18	19	20	22	24
24	20.5	21.6	23.2	24.0	24.9	26.6	27.8
28	20.1	21.0	22.7	23.4	24.2	25.8	26.8
32	19.4	20.5	21.9	22.7	23.6	25.0	26.1
35	19.0	20.1	21.6	22.4	23.2	24.7	25.8
40	18.1	19.2	20.7	21.5	22.2	23.7	24.7

Cooling Capacity for RAS-090HNBRMQ2 Unit:kW

Outdoor temperature (℃ DB)	Indoor airlet temperature (℃ WB)						
	14	16	18	19	20	22	24
24	22.4	23.6	25.4	26.3	27.2	28.8	30.4
28	22.0	23.0	24.8	25.6	26.5	27.9	29.3
32	21.4	22.7	24.2	25.1	25.8	27.1	28.8
35	20.6	21.8	23.4	25.0	25.4	26.7	27.9
40	19.8	21.0	22.6	23.5	24.3	25.7	27.0

Cooling Capacity for RAS-100HNBRMQ2 Unit:kW

Outdoor temperature (℃ DB)	Indoor airlet temperature (℃ WB)						
	14	16	18	19	20	22	24
24	25.1	27.0	29.1	30.2	31.0	33.1	34.2
28	24.7	26.2	28.3	29.3	30.3	32.3	33.6
32	24.1	25.5	27.6	28.5	29.4	31.4	32.8
35	23.8	25.1	27.0	28.0	28.9	30.7	32.1
40	22.7	24.0	25.9	26.8	27.8	29.7	31.0

Cooling Capacity for RAS-110HNBRMQ2 Unit:kW

Outdoor temperature (℃ DB)	Indoor airlet temperature (℃ WB)						
	14	16	18	19	20	22	24
24	27.3	28.6	30.7	31.7	33.0	35.2	36.3
28	26.9	28.1	30.4	31.4	32.6	34.7	36.0
32	26.0	27.4	29.7	31.1	31.9	34.2	35.6
35	25.7	27.0	29.3	31.0	31.5	33.7	35.0
40	24.7	26.0	28.1	29.2	30.1	31.8	33.2

Cooling Capacity for RAS-120HNBRMQ2 Unit:kW

Outdoor temperature (℃ DB)	Indoor airlet temperature (℃ WB)						
	14	16	18	19	20	22	24
24	30.1	31.5	33.9	35.0	36.4	38.8	40.0
28	29.7	31.0	33.5	34.6	35.9	38.3	39.7
32	28.7	30.2	32.8	33.9	35.2	37.7	39.3
35	28.3	29.8	32.3	33.5	34.7	37.2	38.6
40	27.2	28.7	31.0	32.2	33.2	35.1	36.6

SELECTION DATA

◆ Heating:

Heating Capacity for RAS-070HNBRMQ2 Unit:kW

Outdoor temperature (℃ WB)	Indoor airlet temperature (℃ DB)				
	16.0	18.0	20.0	22.0	24.0
-20	13.8	13.4	13.2	13.0	12.8
-15	14.6	14.3	14.1	13.9	13.7
-10	15.9	15.7	15.5	15.2	15.2
-5	17.9	17.9	17.9	17.7	17.5
0	20.4	20.4	20.4	20.2	20.2
5	22.2	22.0	22.0	22.0	21.7
6	22.6	22.4	22.4	22.4	22.2
10	24.6	24.6	24.4	24.4	24.2
15	25.8	25.3	25.3	24.9	24.9

Heating Capacity for RAS-080HNBRMQ2 Unit:kW

Outdoor temperature (℃ WB)	Indoor airlet temperature (℃ DB)				
	16.0	18.0	20.0	22.0	24.0
-20	15.4	15.0	14.7	14.4	14.3
-15	16.2	15.9	15.7	15.4	15.3
-10	17.6	17.5	17.3	17.1	16.9
-5	20.0	20.0	20.0	19.8	19.6
0	22.8	22.7	22.7	22.6	22.4
5	24.6	24.6	24.6	24.4	24.3
6	25.3	25.0	25.0	25.0	24.8
10	27.6	27.4	27.3	27.1	27.0
15	28.7	28.3	28.1	27.9	27.7

Heating Capacity for RAS-090HNBRMQ2 Unit:kW

Outdoor temperature (℃ WB)	Indoor airlet temperature (℃ DB)				
	16.0	18.0	20.0	22.0	24.0
-20	15.7	15.3	15.0	14.7	14.6
-15	16.5	16.2	16.0	15.7	15.6
-10	17.9	17.8	17.6	17.4	17.2
-5	20.4	20.4	20.4	20.2	20.0
0	23.2	23.1	23.1	23.0	22.8
5	25.1	25.1	25.1	24.9	24.8
6	26.3	26.0	26.0	25.5	25.3
10	28.1	27.9	27.8	27.6	27.5
15	29.3	28.8	28.6	28.4	28.2

Heating Capacity for RAS-100HNBRMQ2

Unit:kW

Outdoor temperature (℃ WB)	Indoor airlet temperature (℃ DB)				
	16.0	18.0	20.0	22.0	24.0
-20	19.4	18.9	18.5	18.2	18.0
-15	20.4	20.1	19.7	19.4	19.3
-10	22.2	22.1	21.7	21.5	21.3
-5	25.2	25.2	25.2	24.9	24.7
0	28.7	28.6	28.6	28.5	28.2
5	31.1	30.9	30.9	30.7	30.6
6	32.1	31.8	31.5	31.2	30.9
10	34.8	34.5	34.3	34.0	33.5
15	36.1	35.7	35.4	35.1	34.5

Heating Capacity for RAS-110HNBRMQ2

Unit:kW

Outdoor temperature (℃ WB)	Indoor airlet temperature (℃ DB)				
	16.0	18.0	20.0	22.0	24.0
-20	19.3	18.8	18.6	18.3	18.2
-15	21.1	20.7	20.2	20.1	19.9
-10	23.2	23.1	22.4	22.1	21.9
-5	25.6	25.5	25.5	25.4	25.4
0	29.6	29.4	29.1	29.0	28.8
5	33.0	32.8	32.6	32.2	32.0
6	34.3	34.0	33.9	32.9	32.6
10	36.5	36.3	36.1	35.7	35.2
15	37.9	37.8	37.7	37.7	37.2

Heating Capacity for RAS-120HNBRMQ2

Unit:kW

Outdoor temperature (℃ WB)	Indoor airlet temperature (℃ DB)				
	16.0	18.0	20.0	22.0	24.0
-20	21.8	21.2	21.0	20.7	20.5
-15	23.8	23.4	22.8	22.7	22.5
-10	26.2	26.1	25.3	24.9	24.7
-5	28.9	28.8	28.8	28.7	28.7
0	33.4	33.2	32.9	32.7	32.5
5	37.2	37.0	36.8	36.4	36.1
6	37.9	37.9	37.5	37.1	36.8
10	41.2	41.0	40.7	40.3	39.7
15	42.8	42.7	42.6	42.5	42.0

NOTES:

(1)The capacity are tested under the following working conditions.

Pipe length: 10m; Pipe lift: 0m

(2) In some cases, the value may change due to the compressor protection control.

(3) The heating capacity on the table indicates the peak value, which does not include the capacity decrease caused by frost.

3.5 Correction Factor According to Piping Length

- Cooling Capacity

Correction Factor for Cooling Capacity According to Piping Length

The cooling capacity should be corrected according to the following formula:

CCA=CC x F

CCA: Actual Corrected Cooling Capacity

CC: Cooling Capacity in the Performance Table

F: Correction Factor Based on the Equivalent Piping Length

The correction factors are shown in the following figures.

Equivalent Piping Length for:

- One 90° Elbow is 0.5m.
- One 180° Bend is 1.5m.
- One branch pipe is 0.5m.

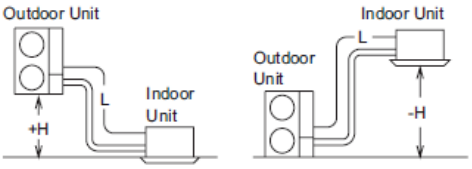

H: Vertical Distance Between Indoor Unit and Outdoor Unit
EL: Equivalent Total Distance Between Indoor Unit and Outdoor Unit (Equivalent One-Way Piping Length)
H>0: Position of Outdoor Unit Higher Than Position of Indoor Unit
L: Actual One-Way Piping Length Between Indoor Unit and Outdoor Unit

Model: RAS-070~090HNBRMQ2

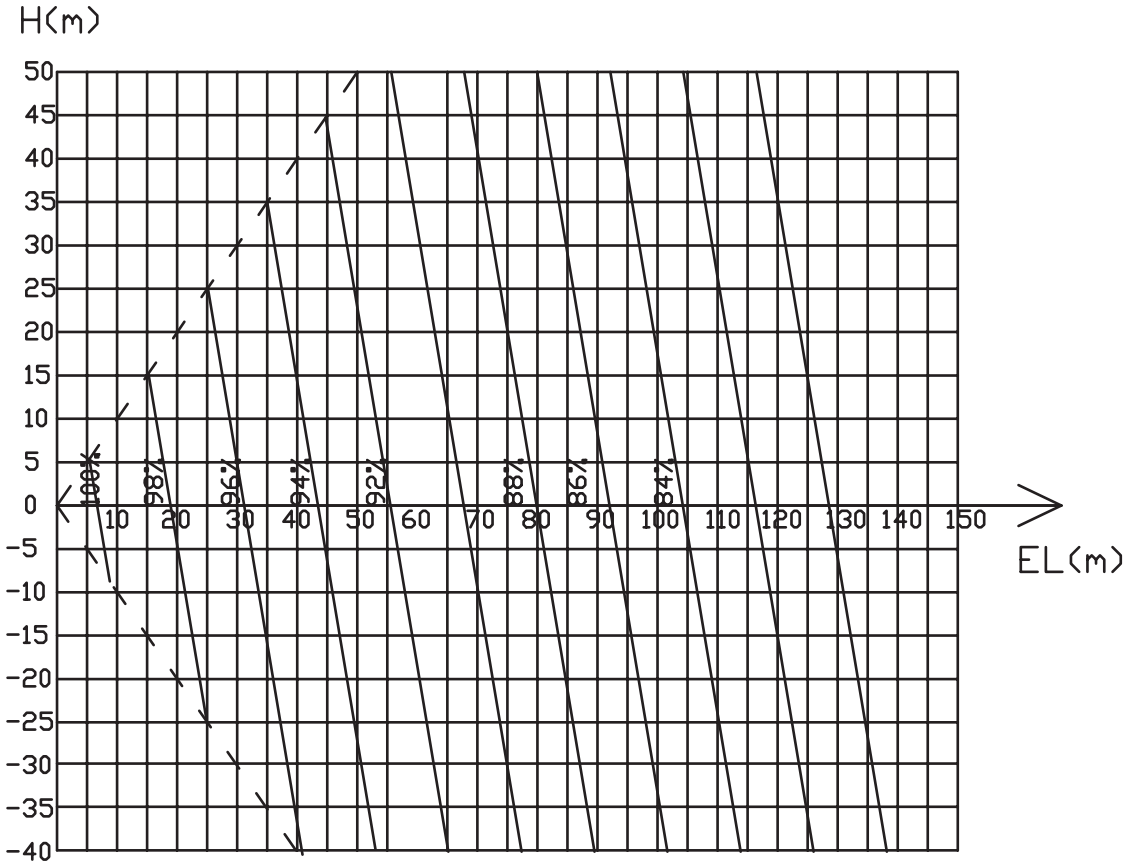

Model: RAS-100HNBRMQ2

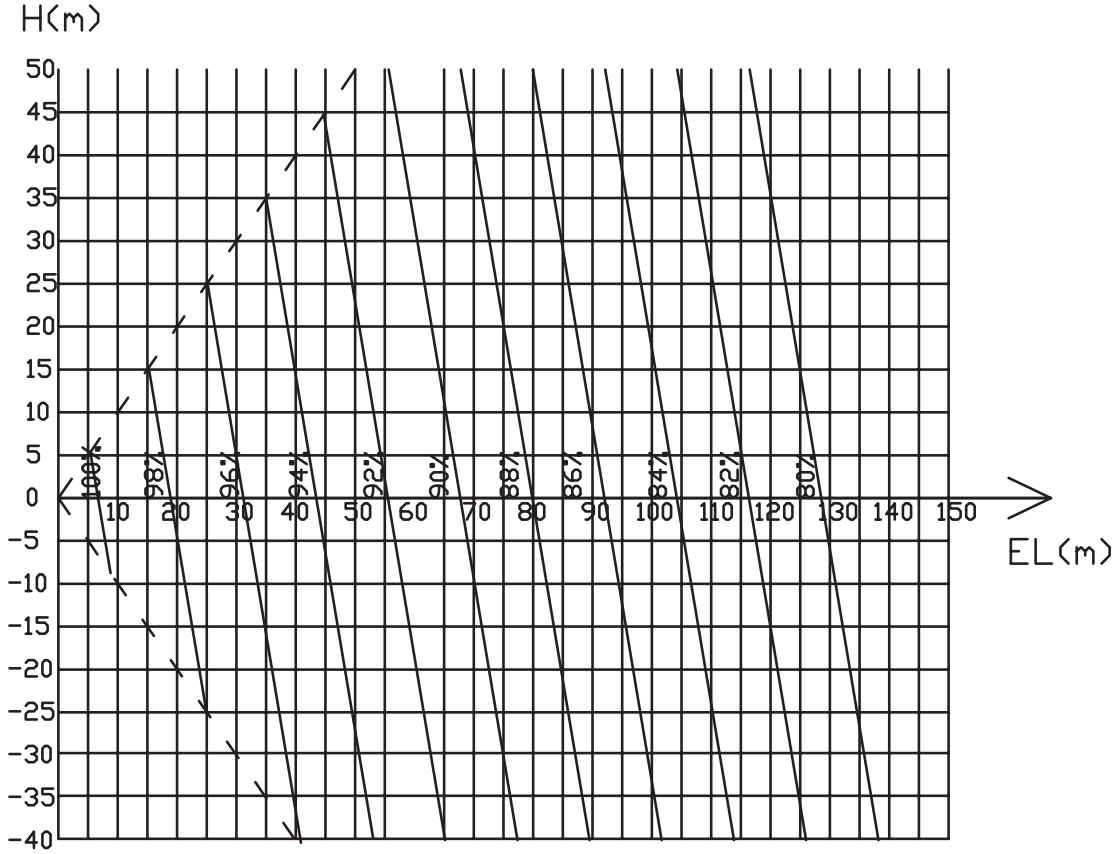

SELECTION DATA

Model: RAS-110~120HNBRMQ2

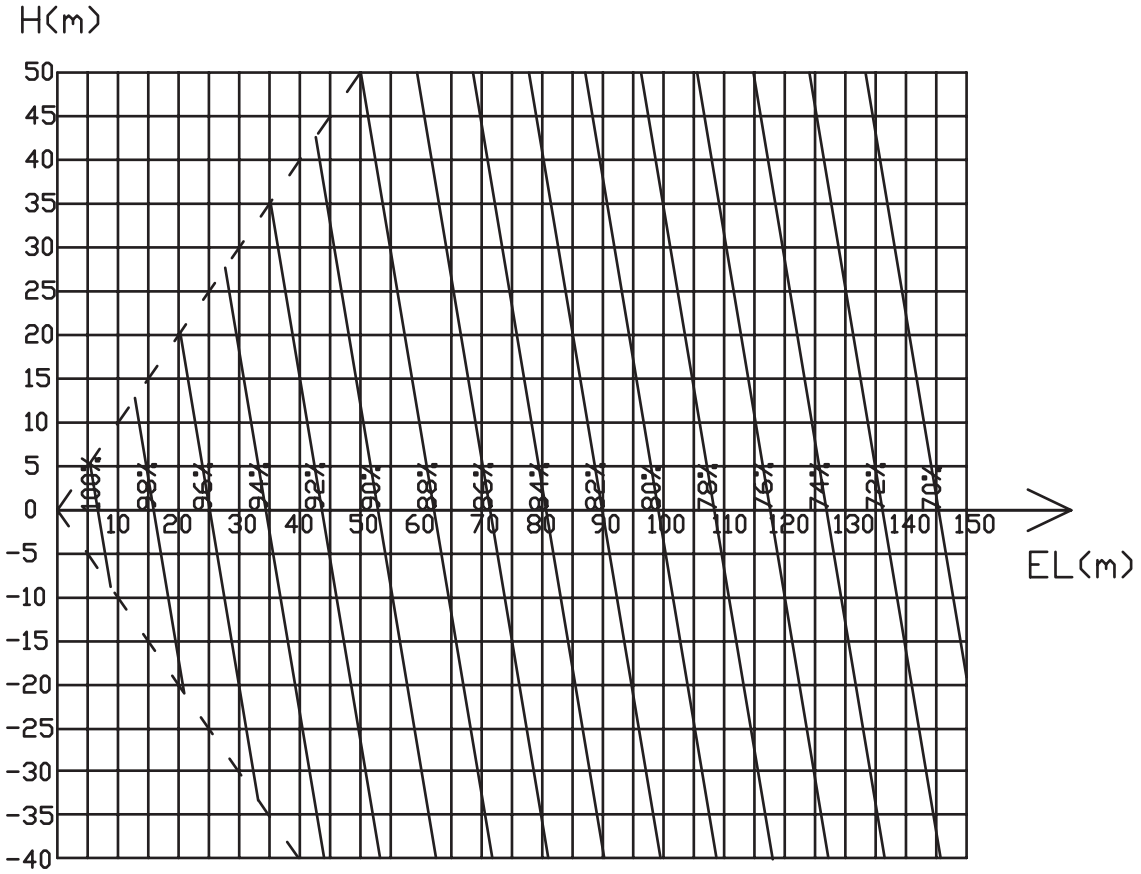

◆ Heating Capacity

Correction Factor for Heating Capacity According to Piping Length

The heating capacity should be corrected according to the following formula:

HCA=HC x F

HCA: Actual Corrected Heating Capacity

HC: Heating Capacity in the Performance Table

F: Correction Factor Based on the Equivalent Piping Length

The correction factors are shown in the following figures.

Equivalent Piping Length for:

- ◆ One 90° Elbow is 0.5m.
- ◆ One 180° Bend is 1.5m.
- ◆ One branch pipe is 0.5m.

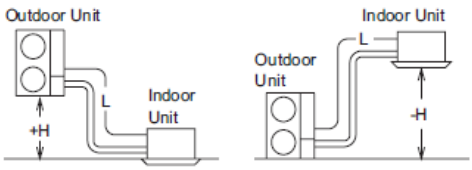

H: Vertical Distance Between Indoor Unit and Outdoor Unit

EL: Equivalent Total Distance Between Indoor Unit and Outdoor Unit (Equivalent One-Way Piping Length)

H>0: Position of Outdoor Unit Higher Than Position of Indoor Unit

L: Actual One-Way Piping Length Between Indoor Unit and Outdoor Unit

Model: RAS-070~120HNBRMQ2

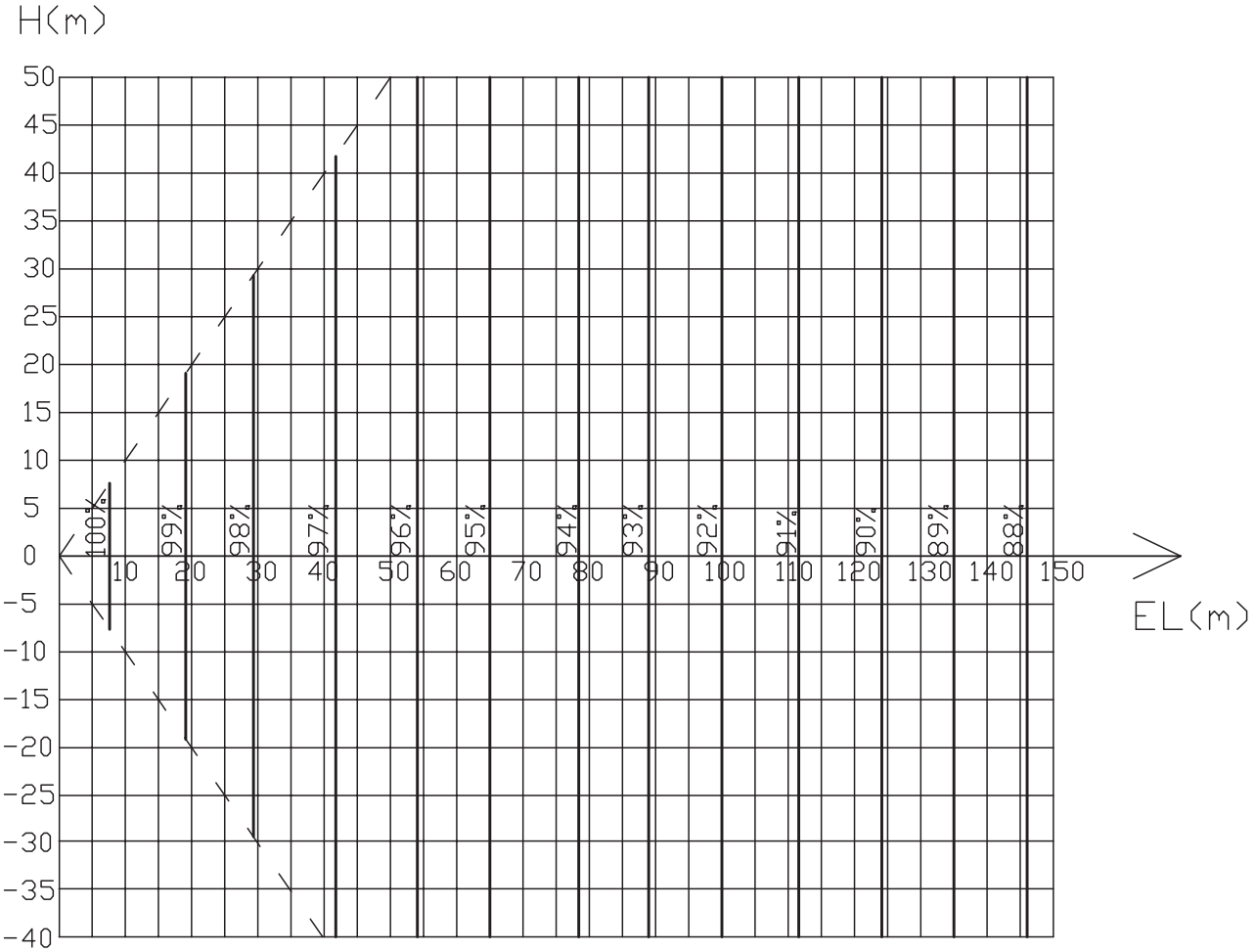

3.6 Correction Factor According to Defrost Operation

The heating capacity in the preceding paragraph does not include defrost operation periods. Therefore, capacity should be corrected as follows:

Corrected Heating Capacity = Correction Factor x Heating Capacity

Outdoor Air Temp. (°C DB) (Humidity=85% RH)	-7	-5	-3	0	3	5	7
Correction Factor	0.95	0.93	0.88	0.85	0.87	0.90	1.00

NOTE

- The correction factor is not available for special conditions like snowfall or operation in a transitional period.

Hitachi - Johnson Controls Air Conditioning

Add.: 1-16-1, Kaigan Minato-ku, Tokyo 105-0022, Japan

© 2020 Hitachi-Johnson Controls Air Conditioning, Inc.

Specifications in this catalogue are subject to change without notice, in order that Hitachi-Johnson Controls may bring the latest innovations to customers.

TCY12021009B