TECHNICAL CATALOGUE

HITACHI

Cooling & Heating

RAK-50RPE1 RAK-60RPE

RAI-25RPE RAI-35RPE RAI-50RPE RAI-60RPE

RAD-25RPE RAD-35RPE

RAD-50RPE RAD-60RPE

RAC-25NPE
RAC-35NPE

RAC-50NPE
RAC-60NPE

HITACHI

Specifications in this catalogue are subject to change without prior notice in order for HITACHI to bring in the latest innovations to their customers

Whilst every effort is made to ensure that all dimensions and specifications are correct, any printers' error not rectified are outside the control of HITACHI, who cannot be held responsible for the same

CONTENTS

CONTENTS 1

1 SPECIFICATIONS 3
1.1. WALL TYPE (RAK-50RPE1, RAK-60RPE) 3
1.2. CEILING CASSETTE (RAI-25RPE, RAI-35RPE) 4
1.3. CEILING CASSETTE (RAI-50RPE, RAI-60RPE) 5
1.4. DUCT TYPE (RAD-25RPE, RAD-35RPE) 6
1.5. DUCT TYPE (RAD-50RPE, RAD-60RPE) 7
1.6. DUCT STATIC PRESSURE AND AIR FLOW 8
1.7. DUCT STATIC PRESSURE AND AIR FLOW 9
1.8. OUTDOOR (RAC-25NPE, RAC-35NPE) 10
1.9. OUTDOOR (RAC-50NPE, RAC-60NPE) 11

2 DIMENSIONAL DATA 12
2.1. INDOOR WALL TYPE: RAK-50RPE1, RAK-60RPE 12
2.3. INDOOR CEILING CASSETTE: RAI-25RPE, RAI-35RPE, RAI-50RPE, RAI-60RPE 13
2.4. DUCT TYPE: RAD-25RPE / 35RPE 14
2.5. INDOOR DUCT TYPE: RAD-50RPE, RAD-60RPE 15
2.6. OUTDOOR: RAC-25NPE, RAC-35NPE 16
2.7. OUTDOOR: RAC-50NPE, RAC-60NPE 17

3 CAPACITIES TABLE 18
3.1. CAPACITY CHARACTERISTIC CURVES 18
3.1.1. RAK-50RPE1/RAC-50NPE 18
3.1.2. RAK-60RPE/RAC-60NPE 19
3.1.3. RAI-25RPE/RAC-25NPE 20
3.1.4. RAI-35RPE/RAC-35NPE 20
3.1.5. RAI-50RPE/RAC-50NPE 21
3.1.6. RAI-60RPE/RAC-60NPE 21
3.1.7. RAD-25RPE/RAC-25NPE 22
3.1.8. RAD-35RPE/RAC-35NPE 22
3.1.9. RAD-50RPE/RAC-50NPE 23
3.1.10. RAD-60RPE/RAC-60NPE 23
3.2. CORRECTION FACTORS ACCORDING TO PIPING LENGTH 24
3.3. CORRECTION FACTORS ACCORDING TO DEFROSTING OPERATION 26

4 SOUND DATA 27
4.1. RAC-25NPE 27
4.2. RAC-35NPE 28
4.3. RAC-50NPE 29
4.4. RAC-60NPE 30

5 WORKING RANGE 31
5.1. POWER SUPPLY 31
5.2. WORKING RANGE 31

6 ELECTRICAL DATA 32
6.1. INDOOR UNIT 32
6.2. OUTDOOR UNIT 32

7 WIRING DIAGRAM 33
7.1. RAK-50RPE1 / RAK-60RPE 33
7.2. RAI-25RPE, RAI-35RPE, RAI-50RPE, RAI-60RPE 34
7.3. RAD-25RPE, RAD-35RPE 35
7.4. RAD-50RPE, RAD-60RPE 36
7.5. RAC-25NPE / RAC-35NPE 37
7.6. RAC-50NPE, RAC-60NPE 38

8 REFRIGERANT CYCLE 39
8.1. RAK-50RPE1/RAC-50NPE, RAK-60RPE/RAC-60NPE 39
8.2. CEILING CASSETTE: RAI-25RPE, RAI-35RPE 40
8.3. CEILING CASSETTE: RAI-50RPE/RAC-50NPE, RAI-60RPE/RAC-60NPE 41
8.4. RAD-25RPE, RAD-35RPE 42
8.5. RAD-50RPE/RAC-50NPE, RAD-60RPE/RAC-60NPE 43
8.6. OUTDOOR: RAC-25NPE, RAC-35NPE 44

9 OPTION LIST 45
9.1. WIRELESS REMOTE CONTROL FUNCTION SPX-RCKA1/RCKA2/RCKA3 45
9.1.1. SHIFT VALUE 46

9.1.2. OPERATION LOCK 48
9.1.3. SETTING THE PREVENTION OF MUTUAL INTERFERENCE 49
9.1.4. INTERMITTENT FAN SPEED SETTING 49
9.1.5. FAN SPEED SETTING IN THERMO OFF IN COOLING 50
9.1.6. ERROR CODE INFORMATION 51
9.1.7. ADDITIONAL FUNCTION VIA DIP-SWITCH SETTINGS 53
9.1.8. AUTO RESTART FUNCTION 53
9.1.9. HEATING/COOLING ONLY MODE SELECTION 53
9.2. WIRED REMOTE CONTROL SPX-RCDA AND SPX-RCDB 54
9.2.1. SHIFT VALUE 55
9.2.2. ERROR CODE INFORMATION 56
9.3. WIRED FULL DOT REMOTE – SPX-WKT3 59
9.3.1. NAMES AND FUNCTIONS OF REMOTE CONTROLLER 59
9.3.2. SERVICE MENU 60
9.3.3. SHIFT VALUE CHANGE 61
9.3.4. OPERATION LOCK 62
9.3.5. INTERMITTENT FAN CONTROL 63
9.3.6. FAN SPEED DURING THERMO OFF 64
9.4. H-LINK ADAPTOR – PSC 6RAD 65
9.4.1. SAFETY SUMMARY 65
9.4.2. INSTALLATION WORK 65
9.4.3. ELECTRICAL WIRING 66
9.4.4. DIP SWITCH SETTING 67
9.4.5. TEST RUN 68
9.5. DRY CONTACT (SPX-WDC2 AND SPX-WDC3) APPLICATION (USING DIP SWITCH) 69
9.6. DISTRIBUTOR – SPX-DST1 72
9.7. REMOTE SENSOR - SPX-RTH1 73
9.7.1. SELECTION OF INSTALLATION POSITION 73
9.7.2. INSTALLATION PROCEDURE 73
9.7.3. WIRING PROCEDURES 73

1 SPECIFICATIONS

1.1. WALL TYPE (RAK-50RPE1, RAK-60RPE)

INDOOR	Unit	RAK-50RPE1	RAK-60RPE
Nominal capacity adjustable		no	no
Nominal Cooling capacity (min - max)	kW	5.00 (1.20- 5.80)	6.00 (1.20 - 6.50)
Cooling sensible capacity	kW	3.618	4.277
Nominal Heating capacity (min - max)	kW	6.00 (1.20- 6.80)	7.00 (1.20 - 8.00)
Noise level cooling (sound pressure) (SL / L / M / H)	dB(A)	26/33/39/47	30/33/42/48
Noise level heating (sound pressure) (SL / L / M / H)	dB(A)	26/33/39/47	33/34/42/49
Noise level (sound power)	dB(A)	60	60
Air flow cooling mode (SL / L / M / H)	m^3/h	310/410/570/720	306/408/570/720
Air flow heating mode (SL / L / M / H)	m^3/h	350/460/640/800	350/460/640/800
Fan Motor	W	30	30
Dehumidification	l/h	2.8	2.8
Dimensions (H x W x D)	mm	300 x 900 x 230	300 x 900 x 230
Weight	kg	11.5	11.5
Colour		White(N9.5)	White(N9.5)
Condensate Drain	mm	φ16	φ16
Running current (C/H)	A	5.98-6.52 / 6.31-6.89	7.20-7.85 / 7.74-8.45
Power supply		220 - 240V From OUTDOOR	220 - 240V From OUTDOOR
Cable section (Interconnection)	mm^2	1.50x3 + EARTH	1.50x3 + EARTH
Piping diameter (Liq / Gas)	Inch	1/4" / 1/2"	1/4" / 1/2"
Drain diameter (ext)	mm	φ16	φ16
Remote control (optional)		SPX-RCKA2 / SPX-RCDB / SPX-WKT3	SPX-RCKA2 / SPX-RCDB / SPX-WKT3
Filter			
ACL Filter		Active Carbon	Active Carbon
ACL part name		SPX-CFH25	SPX-CFH25
Pre-filter (Standard / Optional)		Normal/-	Normal/-

NOTE:

1. *The nominal cooling and heating capacity is the combined capacity of the HITACHI standard split system, and are based on the ISO 5151.*

Operation Conditions		*Cooling*	*Heating*
Indoor Air Inlet Temperature	***dB***	*27.0 °C*	*20.0 °C*
	WB	*19.0 °C*	
Outdoor Air Inlet Temperature	***dB***	*35.0 °C*	*7.0 °C*
	WB		*6.0 °C*
***Piping Length**: 5.0 meters; **Piping Lift**: 0 meter* ***dB**: Dry Bulb; **WB**: Wet Bulb*			

2. *The Sound Pressure Level is based on the following conditions:*

- *0.8 meter beneath indoor height center*
- *1 meter from Discharge grille*

The above data was measured in an anechoic chamber. Please take into consideration reflected sound of your specific site

1.2. CEILING CASSETTE (RAI-25RPE, RAI-35RPE)

INDOOR	Unit	RAI-25RPE	RAI-35RPE
Nominal capacity adjustable		no	no
Nominal Cooling capacity (min - max)	kW	2.5 (0.9-3.0)	3.5 (0.9-4.0)
Cooling sensible capacity	kW	2.0	2.9
Nominal Heating capacity (min - max)	kW	3.5 (0.9-5.0)	4.8 (0.9-6.6)
Noise level cooling (sound pressure) (SL / L / M / H)	dB(A)	27/31/35/38	27/33/37/40
Noise level heating (sound pressure) (SL / L / M / H)	dB(A)	28/32/36/39	28/34/38/41
Noise level (sound power)	dB(A)	54	56
Air flow cooling mode (SL / L / M / H)	m^3/h	360/505/590/660	360/505/590/660
Air flow heating mode (SL / L / M / H)	m^3/h	444/540/630/720	444/540/630/720
Fan Motor	W	57	57
Drain pump pressure lift	cm	11.5	11.5
Dehumidification	l/h		
Included drain pump	yes/no	Yes	Yes
Max. height available for drain pump (RAD/RAI only)	cm	30.4	30.4
Dimensions (H x W x D)	mm	285x570x570	285x570x570
Panel dimensions (H x W x D)	mm	30x620x620	30x620x620
Weight	kg	17	17
Colour		-	-
Condensate Drain	mm	-	-
Panel weight	kg	2.8	2.8
Panel reference		P-AP56NAMS	P-AP56NAMS
Color of the panel (RAL)		-	-
Running current (C/H)	A	5.98-6.52 / 6.61-7.21	7.20-7.85 / 7.74-8.45
Power supply		220 - 240V From OUTDOOR	220 - 240V From OUTDOOR
Cable section	mm^2	1.50x3 + EARTH	1.50x3 + EARTH
Piping diameter (Liq / Gas)	Inch	1/4" / 1/2"	1/4" / 1/2"
Drain diameter (ext)	mm	Φ32	Φ32
Remote control (optional)		SPX-RCKA3 / SPX-RCDB / SPX-WKT3	SPX-RCKA3 / SPX-RCDB / SPX-WKT3
Filter			
ACL Filter		-	-
ACL part name		-	-
Pre-filter (Standard / Optional)		Normal/-	Normal/-

NOTE:

1. *The nominal cooling and heating capacity is the combined capacity of the HITACHI standard split system, and are based on the ISO 5151.*

Operation Conditions		Cooling	Heating
Indoor Air Inlet Temperature	dB	27.0 °C	20.0 °C
	WB	19.0 °C	
Outdoor Air Inlet Temperature	dB	35.0 °C	7.0 °C
	WB		6.0 °C
Piping Length: 5.0 meters; **Piping Lift**: 0 meter **dB**: Dry Bulb; **WB**: Wet Bulb			

2. *The Sound Pressure Level is based on the following conditions:*

- *1.5 meter beneath the indoor unit.*

The above data was measured in an anechoic chamber so that reflected sound should be taken into consideration when installing the unit.

1.3. CEILING CASSETTE (RAI-50RPE, RAI-60RPE)

INDOOR	Unit	RAI-50RPE	RAI-60RPE
Nominal capacity adjustable		no	no
Nominal Cooling capacity (min - max)	kW	5.00 (1.20- 5.80)	6.00 (1.20 - 6.50)
Cooling sensible capacity	kW	3.641	4.093
Nominal Heating capacity (min - max)	kW	6.00 (1.20- 6.80)	7.00 (1.20 - 8.00)
Noise level cooling (sound pressure) (SL / L / M / H)	dB(A)	29/35/39/43	29/35/39/43
Noise level heating (sound pressure) (SL / L / M / H)	dB(A)	30/36/40/44	30/36/40/44
Noise level (sound power)	dB(A)	56	56
Air flow cooling mode (SL / L / M / H)	m^3/h	390/540/630/720	390/540/630/720
Air flow heating mode (SL / L / M / H)	m^3/h	450/600/690/780	450/600/690/780
Fan Motor	W	57	57
Drain pump pressure lift	cm	11.5	11.5
Dehumidification	l/h	2.8	3.8
Included drain pump	yes/no	Yes	Yes
Max. height available for drain pump (RAD/RAI only)	cm	30.4	30.4
Dimensions (H x W x D)	mm	285x570x570	285x570x570
Panel dimensions (H x W x D)	mm	30x620x620	30x620x620
Weight	kg	17	17
Colour		-	-
Condensate Drain	mm	-	-
Panel weight	kg	2.8	2.8
Panel reference		P-AP56NAMS	P-AP56NAMS
Color of the panel (RAL)		-	-
Running current (C/H)	A	5.98-6.52 / 6.61-7.21	7.20-7.85 / 7.74-8.45
Power supply		220 - 240V From OUTDOOR	220 - 240V From OUTDOOR
Cable section	mm^2	1.50x3 + EARTH	1.50x3 + EARTH
Piping diameter (Liq / Gas)	Inch	1/4" / 1/2"	1/4" / 1/2"
Drain diameter (ext)	mm	Φ32	Φ32
Remote control (optional)		SPX-RCKA3 / SPX-RCDB / SPX-WKT3	SPX-RCKA3 / SPX-RCDB / SPX-WKT3
Filter			
ACL Filter		-	-
ACL part name		-	-
Pre-filter (Standard / Optional)		Normal/-	Normal/-

NOTE:

1. *The nominal cooling and heating capacity is the combined capacity of the HITACHI standard split system, and are based on the ISO 5151.*

Operation Conditions		*Cooling*	*Heating*
Indoor Air Inlet Temperature	***dB***	*27.0 °C*	*20.0 °C*
	WB	*19.0 °C*	
Outdoor Air Inlet Temperature	***dB***	*35.0 °C*	*7.0 °C*
	WB		*6.0 °C*
***Piping Length**: 5.0 meters; **Piping Lift**: 0 meter* ***dB**: Dry Bulb; **WB**: Wet Bulb*			

2. *The Sound Pressure Level is based on the following conditions:*

- *1.5 meter beneath the indoor unit.*

The above data was measured in an anechoic chamber so that reflected sound should be taken into consideration when installing the unit.

1.4. DUCT TYPE (RAD-25RPE, RAD-35RPE)

INDOOR	Unit	RAD-25RPE	RAD-35RPE
Nominal capacity adjustable		no	no
Nominal Cooling capacity (min - max)	kW	2.5 (0.9-3.0)	3.5 (0.9-4.0)
Cooling sensible capacity	kW	2.0	2.5
Nominal Heating capacity (min - max)	kW	3.5 (0.9-5.5)	4.8 (0.9-6.6)
Noise level cooling (sound pressure) (SL / L / M / H)	dB(A)	30/33/37/41	30/33/37/41
Noise level heating (sound pressure) (SL / L / M / H)	dB(A)	30/34/38/42	30/34/38/42
Noise level (sound power)	dB(A)	57	57
Air flow cooling mode (SL / L / M / H)	m^3/h	330/390/450/510	330/390/450/510
Air flow heating mode (SL / L / M / H)	m^3/h	330/390/450/510	330/390/450/510
Fan Motor	W	20	20
Drain pump pressure lift	cm	15	15
Static pressure switch at High (L / M / H) *for RAD	Pa (m^3/h)	70	70
Dehumidification	l/h	2.8	2.8
Included drain pump	yes/no	yes	yes
Max. height available for drain pump (RAD/RAI only)	cm	30	30
Dimensions (H x W x D)	mm	235x750x400	235x750x400
Weight	kg	16	16
Colour		-	-
Condensate Drain	mm	-	-
Running current (C/H)	A	-	-
Power supply		230V From OUTDOOR	230V From OUTDOOR
Cable section	mm^2	1.50x3 + EARTH	1.50x3 + EARTH
Piping diameter (Liq / Gas)	Inch	1/4" / 3/8"	1/4" / 3/8"
Drain diameter (ext)	mm	φ16	φ16
Remote control (optional)		SPX-RCKA1 / SPX-RCDA / SPX-WKT3	SPX-RCKA1 / SPX-RCDA / SPX-WKT3
Filter			
ACL Filter		-	-
ACL part name		-	-
Pre-filter (Standard / Optional)		Normal/-	Normal/-

NOTE:

1. *The nominal cooling and heating capacity is the combined capacity of the HITACHI standard split system, and are based on the ISO 5151.*

Operation Conditions		Cooling	Heating
Indoor Air Inlet Temperature	dB	27.0 °C	20.0 °C
	WB	19.0 °C	
Outdoor Air Inlet Temperature	dB	35.0 °C	7.0 °C
	WB		6.0 °C
Piping Length: 5.0 meters; **Piping Lift**: 0 meter **dB**: Dry Bulb; **WB**: Wet Bulb			

2. *The Sound Pressure Level is based on the following conditions:*
   - *1.5 meter beneath the indoor unit.*

   The above data was measured in an anechoic chamber. Please take into consideration reflected sound of your specific site

1.5. DUCT TYPE (RAD-50RPE, RAD-60RPE)

INDOOR	Unit	RAD-50RPE	RAD-60RPE
Nominal capacity adjustable		no	no
Nominal Cooling capacity (min - max)	kW	5.00 (1.20-5.80)	6.00 (1.20-6.50)
Cooling sensible capacity	kW	4.143	4.357
Nominal Heating capacity (min - max)	kW	6.00 (1.20-6.80)	7.00 (1.20-8.00)
Noise level cooling (sound pressure) (SL / L / M / H)	dB(A)	29/32/35/39	29/32/35/39
Noise level heating (sound pressure) (SL / L / M / H)	dB(A)	29/32/35/40	29/32/35/40
Noise level (sound power)	dB(A)	53	53
Air flow cooling mode (SL / L / M / H)	m^3/h	350/540/800/1140	350/540/800/1140
Air flow heating mode (SL / L / M / H)	m^3/h	350/540/800/1140	350/540/800/1140
Fan Motor	W	180	180
Drain pump pressure lift	cm	30	30
Static pressure switch at High (L / M / H) *for RAD	Pa (m^3/h)	50 / 100/ 150	50 / 100/ 150
Dehumidification	l/h	2.8	2.8
Included drain pump	yes/no	yes	yes
Max. height available for drain pump (RAD/RAI only)	cm	50	50
Dimensions (H x W x D)	mm	270x900x720	270x900x720
Weight	kg	35	35
Colour		-	-
Condensate Drain	mm	-	-
Running current (C/H)	A	-	-
Power supply		230V From OUTDOOR	230V From OUTDOOR
Cable section	mm^2	1.50x3 + EARTH	1.50x3 + EARTH
Piping diameter (Liq / Gas)	Inch	1/4" / 1/2"	1/4" / 1/2"
Drain diameter (ext)	mm	Φ32	Φ32
Remote control (optional)		SPX-RCKA1 / SPX-RCDA / SPX-WKT3	SPX-RCKA1 / SPX-RCDA / SPX-WKT3
Filter			
ACL Filter		-	-
ACL part name		-	-
Pre-filter (Standard / Optional)		Normal/-	Normal/-

NOTE:

1. *The nominal cooling and heating capacity is the combined capacity of the HITACHI standard split system, and are based on the ISO 5151.*

Operation Conditions		Cooling	Heating
Indoor Air Inlet Temperature	dB	27.0 °C	20.0 °C
	WB	19.0 °C	
Outdoor Air Inlet Temperature	dB	35.0 °C	7.0 °C
	WB		6.0 °C
Piping Length: 5.0 meters; **Piping Lift**: 0 meter **dB**: Dry Bulb; **WB**: Wet Bulb			

2. *The Sound Pressure Level is based on the following conditions:*
   - *1.5 meter beneath the indoor unit.*

   The above data was measured in an anechoic chamber. Please take into consideration reflected sound of your specific site

1.6. DUCT STATIC PRESSURE AND AIR FLOW

RAD-25RPE
RAD-35RPE

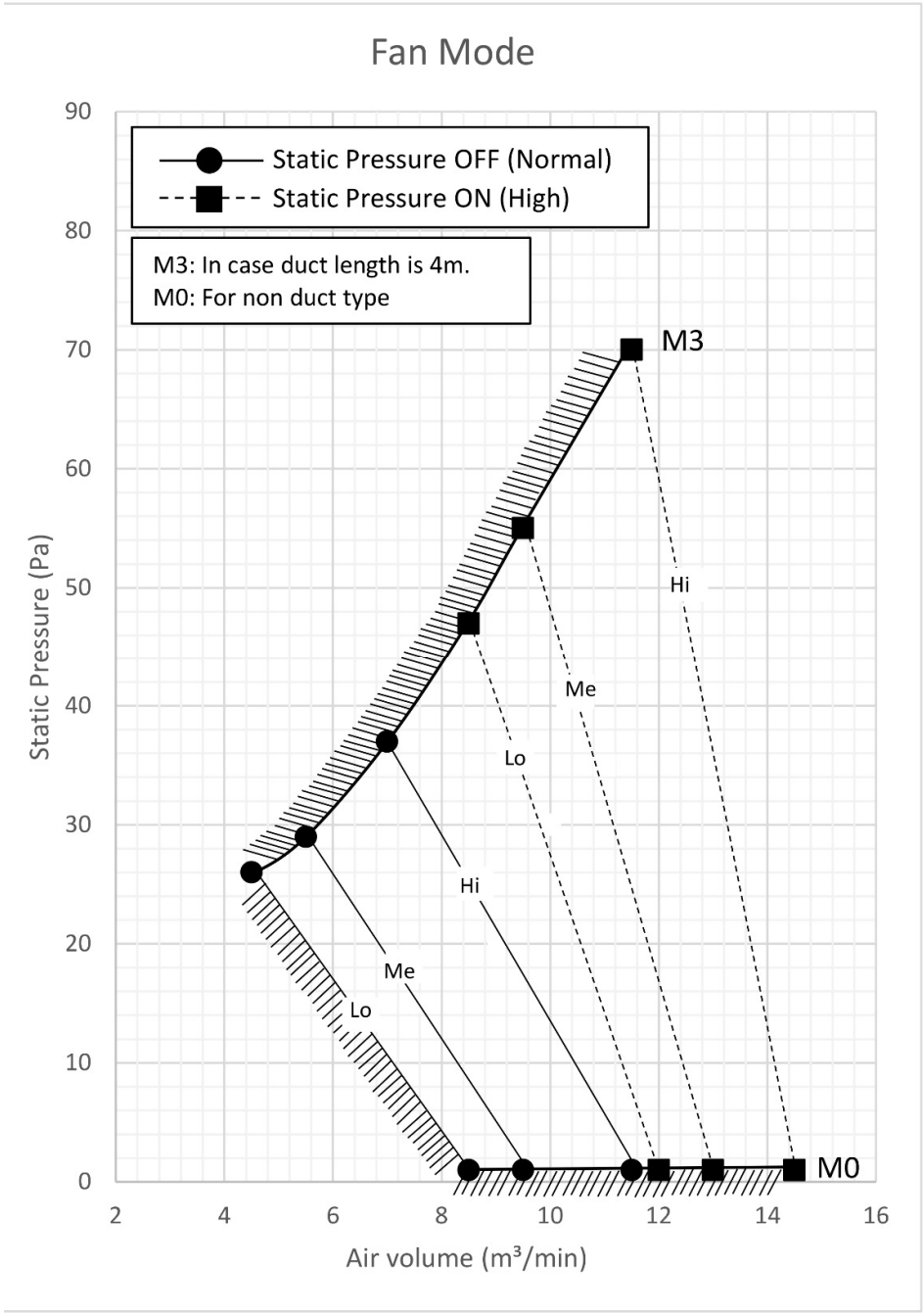

1.7. DUCT STATIC PRESSURE AND AIR FLOW

RAD-50RPE
RAD-60RPE

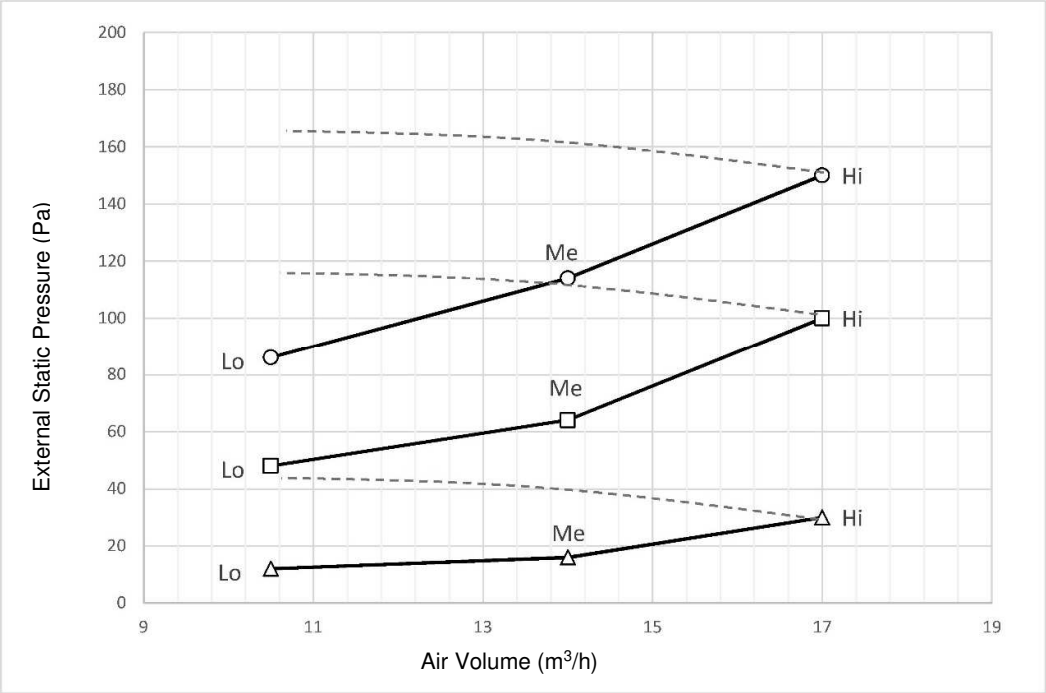

High Static Pressure Mode
Medium Static Pressure Mode
Normal Mode

1.8. OUTDOOR (RAC-25NPE, RAC-35NPE)

OUTDOOR		UNIT	RAC-25NPE	RAC-35NPE
Nominal Cooling capacity (min - max)		kW	Refer to indoor	Refer to indoor
Nominal Heating capacity (min - max)		kW	Refer to indoor	Refer to indoor
Nominal cooling power input (min - max)	RAI	kW	9	0.875 (0.25~1.46)
	RAD		0.595 (0.25~1.29)	0.945 (0.25~1.46)
Nominal heating power input (min - max)	RAI	kW	0.875 (0.25~1.5)	1.230 (0.25~1.92)
	RAD		0.875 (0.25~1.5)	1.26 (0.25~1.92)
EER / COP	RAI		4.20/4.00	4.00/3.90
	RAD		4.20/4.00	3.70/3.81
SEER / SCOP	RAI		6.2/4.3	6.5/4.3
	RAD		6.2/4.3	6.50/4.30
Energy class (SEER/SCOP)	RAI		A++ / A+	A++ / A+
	RAD		A++ / A+	A++ / A+
Noise level cooling (sound pressure)	RAI	dB(A)	48	48
	RAD		48	48
Noise level heating (sound pressure)	RAI	dB(A)	49	49
	RAD		49	49
Noise level (sound power)	RAI	dB(A)	61	61
	RAD		61	61
Air flow (Cooling / Heating)		m^3/h	1920 / 1620	1920 / 1620
Dimensions (H x W x D)		mm	548x750x288	548x750x288
Weight		kg	32.5	32.5
Colour			Beige (5Y7/2)	Beige (5Y7/2)
Power supply			220 - 240V / 1Ph / 50Hz	220 - 240V / 1Ph / 50Hz
Recommended fuse size		A	15	15
Starting current RAI / RAD		A	-	-
Running current (C/H)		A	Refer to indoor	Refer to indoor
Cable section (Power)		mm^2	1.50x2 + EARTH	1.50x2 + EARTH
Cable section (Interconnection)		mm^2	1.50x3 + EARTH	1.50x3 + EARTH
Piping diameter (Liq / Gas)		Inch	1/4" / 3/8"	1/4" / 3/8"
Minimum piping length		m	3	3
Maximum piping length / height difference		m	20 / 10	20 / 10
Current quantity of refrigerant		kg / $TeqCO^2$	0.860 / 0.581	0.860 / 0.581
Chargeless / Additional refrigerant charge		m / g/m	20/-	20/-
Working range (cooling / heating)		°C	-10℃ - 46℃ / -15℃ - 24℃	-10℃ - 46℃ / -15℃ - 24℃
Refrigerant / GWP			R32 / 675	R32 / 675
Condenser Fan			Propeller Fan	Propeller Fan
Compressor	Type		Rotary	Rotary
	Oil Type		ACS68R	ACS68R
	Oil Charge	ml	320±20	580±20
	Coil Resistance	Ω	2.167Ω ±7% at 20℃	2.167Ω ±7% at 20℃
	Quantity		1	1

NOTE:

1. *The Sound Pressure Level is based on the following conditions:*
   - *1 meter from the unit front surface and 1 meter from floor level*

The above data was measured in an anechoic chamber. Please take into consideration reflected sound of your specific site

1.9. OUTDOOR (RAC-50NPE, RAC-60NPE)

OUTDOOR		UNIT	RAC-50NPE	RAC-60NPE
Nominal Cooling capacity (min - max)		kW	Refer to indoor	Refer to indoor
Nominal Heating capacity (min - max)		kW	Refer to indoor	Refer to indoor
Nominal cooling power input (min - max)	RAK	kW	1,420 (300 ~ 2,500)	1,710 (300 ~ 2,650)
	RAI		1,420 (300 ~ 2,500)	1,710 (300 ~ 2,600)
	RAD		1,420 (300 ~ 2,500)	1,710 (300 ~ 2,600)
Nominal heating power input (min - max)	RAK	kW	1,500 (300 ~ 2,650)	1,840 (300 ~ 2,650)
	RAI		1,570 (300 ~ 2,650)	1,840 (300 ~ 2,650)
	RAD		1,570 (300 ~ 2,650)	1,840 (300 ~ 2,650)
EER / COP	RAK		3.52 / 4.00	3.51 / 3.80
	RAI		3.52 / 3.82	3.51 / 3.80
	RAD		3.52 / 3.82	3.51 / 3.80
SEER / SCOP	RAK		7.30 / 4.60	6.50 / 4.20
	RAI		6.20 / 4.40	6.20 / 4.40
	RAD		6.20 / 4.00	6.20 / 4.00
Energy class (SEER/SCOP)	RAK		A++ / A++	A++ / A+
	RAI		A++ / A+	A++ / A+
	RAD		A++ / A+	A++ / A+
Noise level cooling (sound pressure)	RAK	dB(A)	50	50
	RAI		50	50
	RAD		50	50
Noise level heating (sound pressure)	RAK	dB(A)	53	53
	RAI		53	53
	RAD		53	53
Noise level (sound power)	RAK	dB(A)	60/65	60/65
	RAI		56/65	56/65
	RAD		53/65	53/65
Air flow (Cooling / Heating)		m^3/h	2160 / 2160	2160 / 2160
Dimensions (H x W x D)		mm	750×850×298	750×850×298
Weight		kg	50	50
Colour			Beige (5Y7/2)	Beige (5Y7/2)
Power supply			220 - 240V / 1Ph / 50/60Hz	220 - 240V / 1Ph / 50/60Hz
Recommended fuse size		A	20	20
Starting current RAK / RAI / RAD		A	6 / 6 / 10	6 / 6 / 10
Running current (C/H)		A	Refer to indoor	Refer to indoor
Cable section (Power)		mm^2	2.50x2 + EARTH	2.50x2 + EARTH
Cable section (Interconnection)		mm^2	1.50x3 + EARTH	1.50x3 + EARTH
Piping diameter (Liq / Gas)		Inch	1/4" / 1/2"	1/4" / 1/2"
Minimum piping length		m	3	3
Maximum piping length / height difference		m	30 / 20	30 / 20
Current quantity of refrigerant		kg / $TeqCO^2$	1.50 / 1.0125	1.50 / 1.0125
Chargeless / Additional refrigerant charge		m / g/m	30/-	30/-
Working range (cooling / heating)		°C	-15℃ - 46℃ / -15℃ - 24℃	-15℃ - 46℃ / -15℃ - 24℃
Refrigerant / GWP			R32 / 675	R32 / 675
Condenser Fan			Propeller Fan	Propeller Fan
Compressor	Type		Rotary	ROTARY
	Oil Type		ACS68R	ACS68R
	Oil Charge	ml	580±5	580±5
	Coil Resistance	Ω	1.579Ω ±7% at 75℃	1.579Ω ±7% at 75℃
	Quantity		1	1

NOTE:

1. *The Sound Pressure Level is based on the following conditions:*
   - *1 meter from the unit front surface and 1 meter from floor level*

The above data was measured in an anechoic chamber. Please take into consideration reflected sound of your specific site

2 DIMENSIONAL DATA

2.1. INDOOR WALL TYPE: RAK-50RPE1, RAK-60RPE

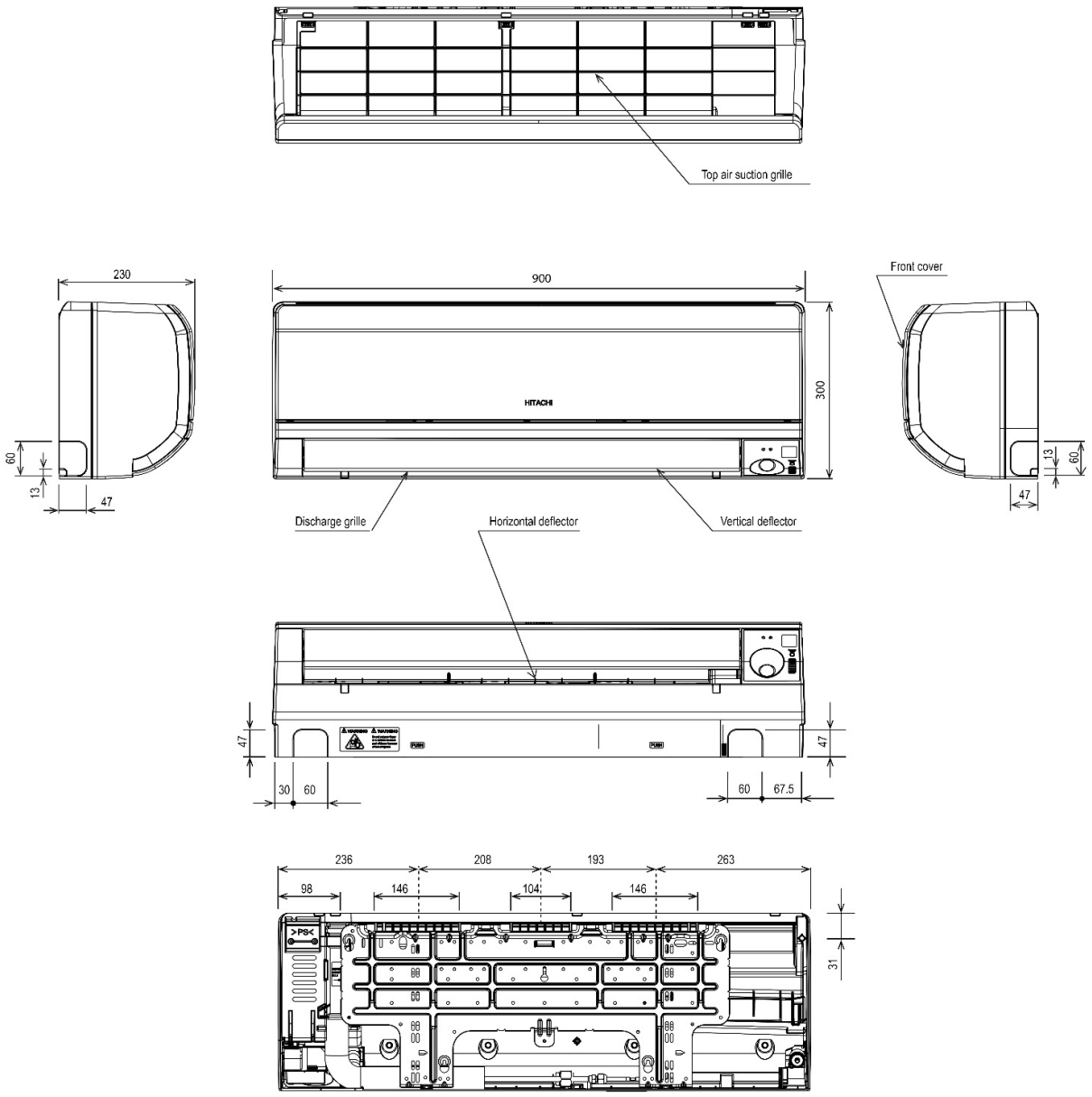

2.3. INDOOR CEILING CASSETTE: RAI-25RPE, RAI-35RPE, RAI-50RPE, RAI-60RPE

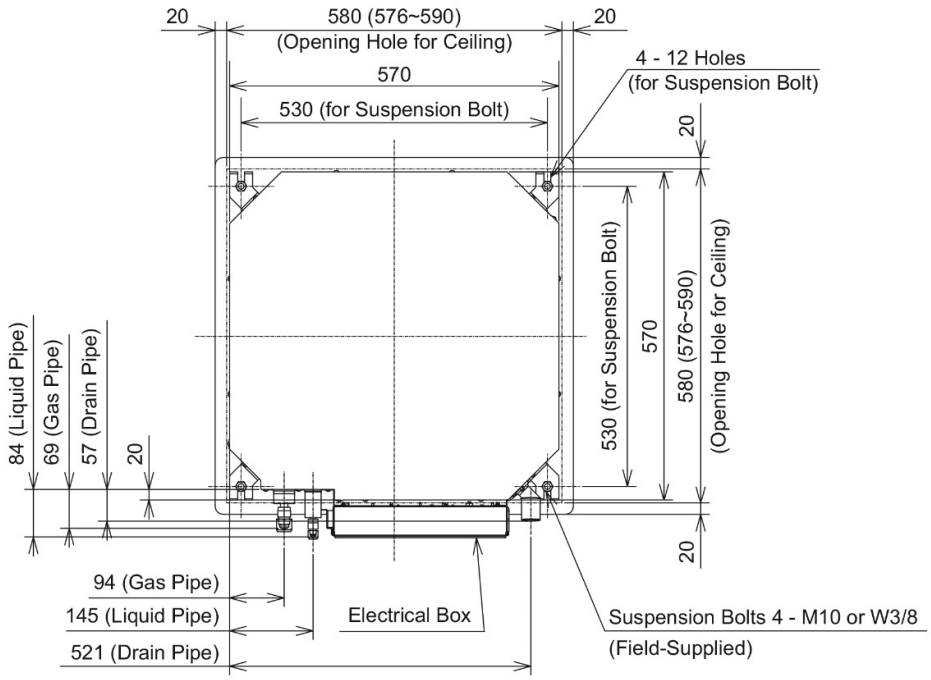

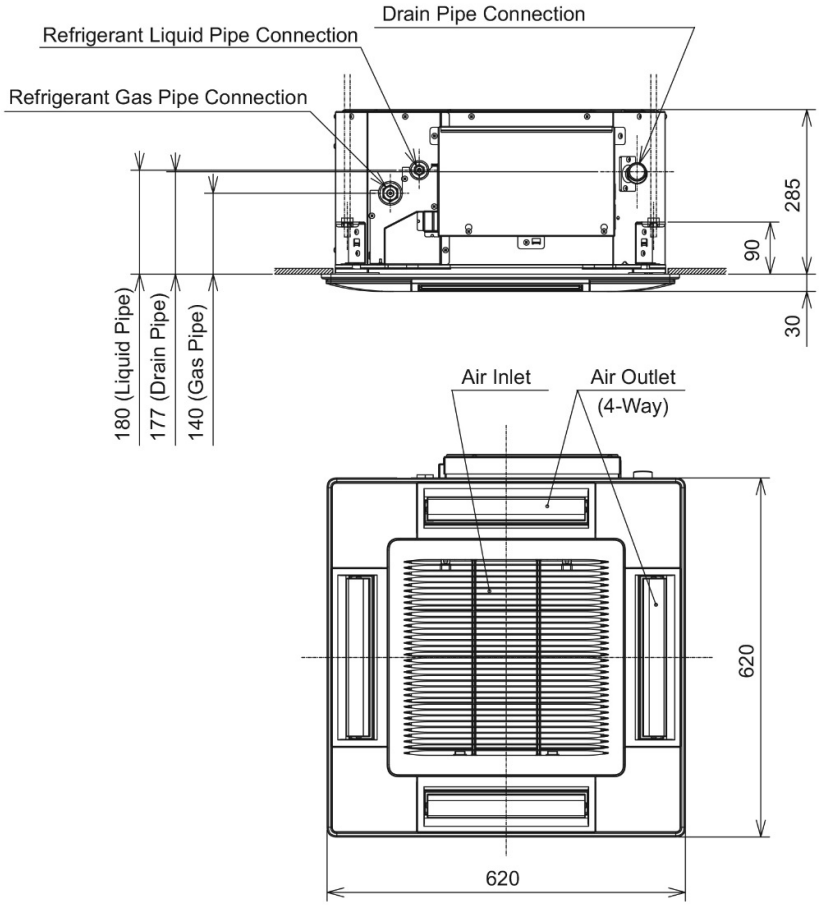

Unit: mm

2.4. DUCT TYPE: RAD-25RPE / 35RPE

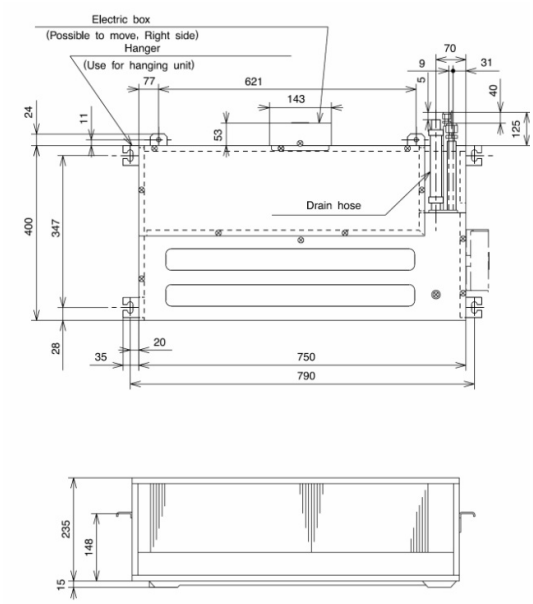

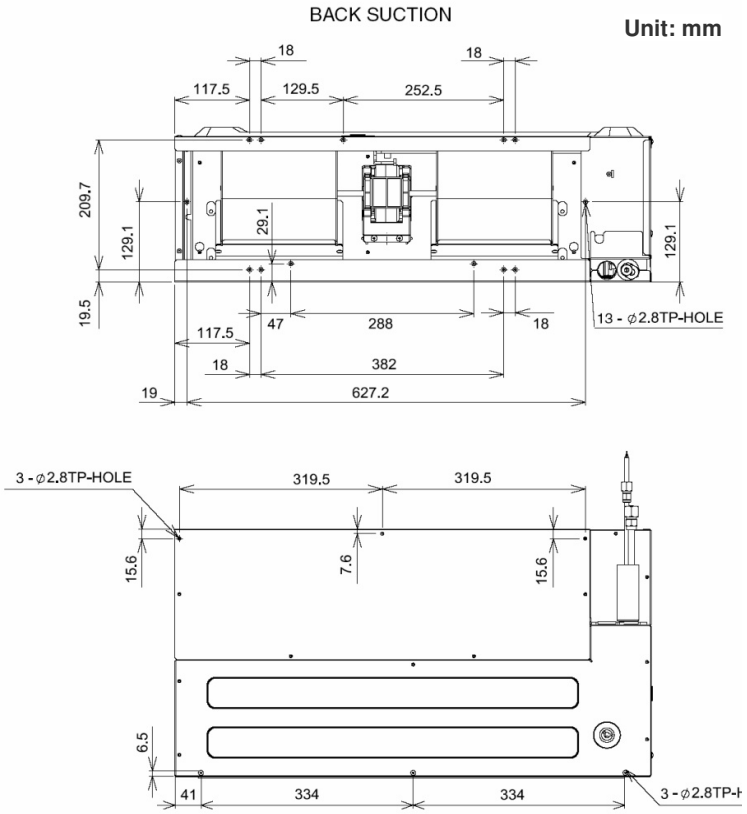

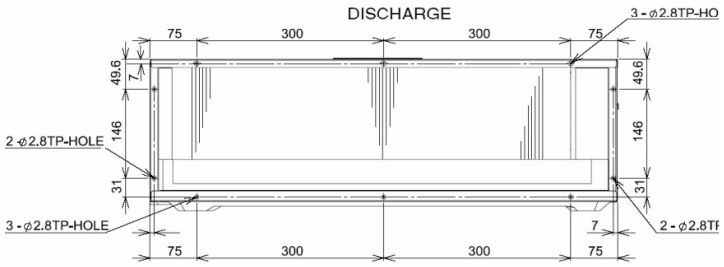

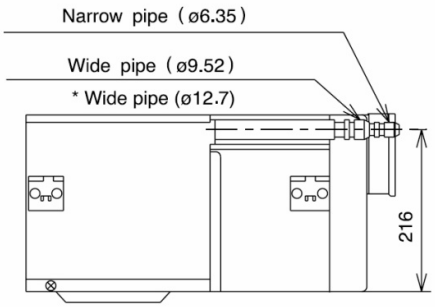

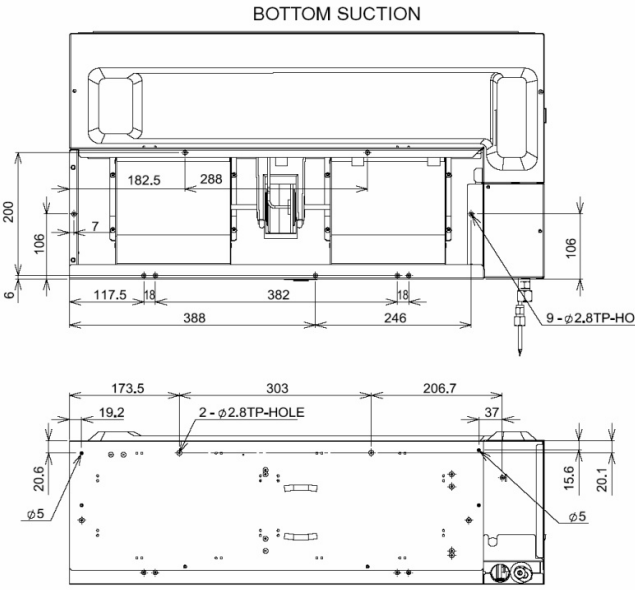

2.5. INDOOR DUCT TYPE: RAD-50RPE, RAD-60RPE

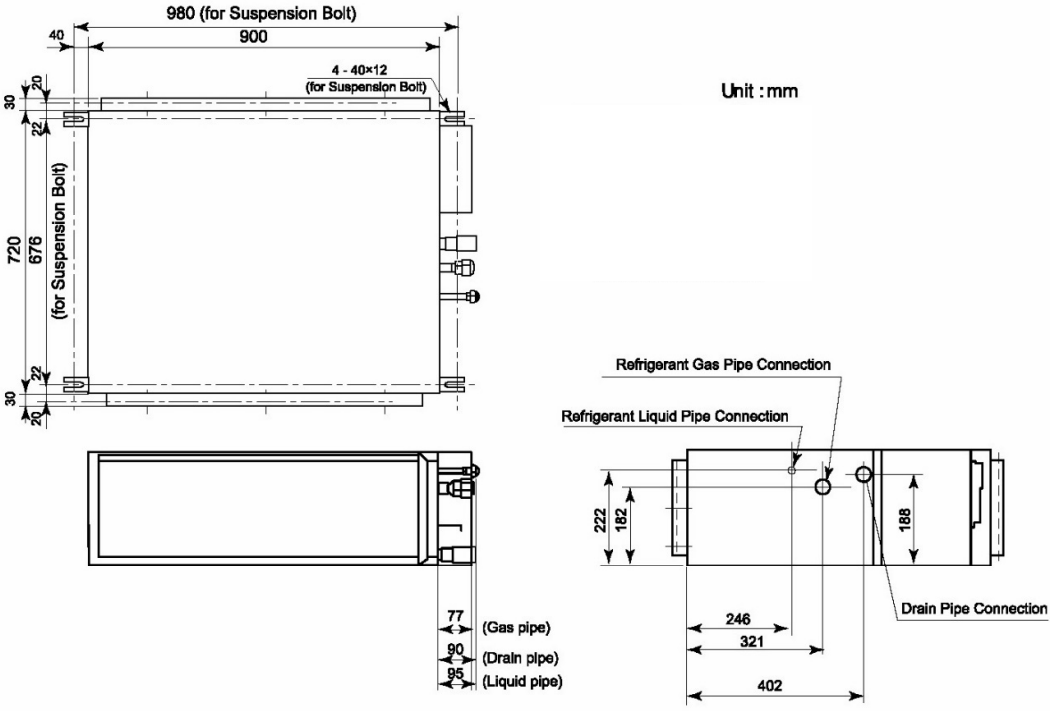

SIDE VIEW

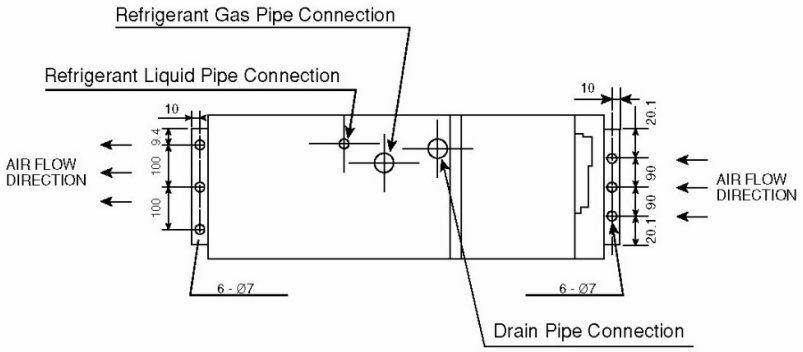

TOP VIEW

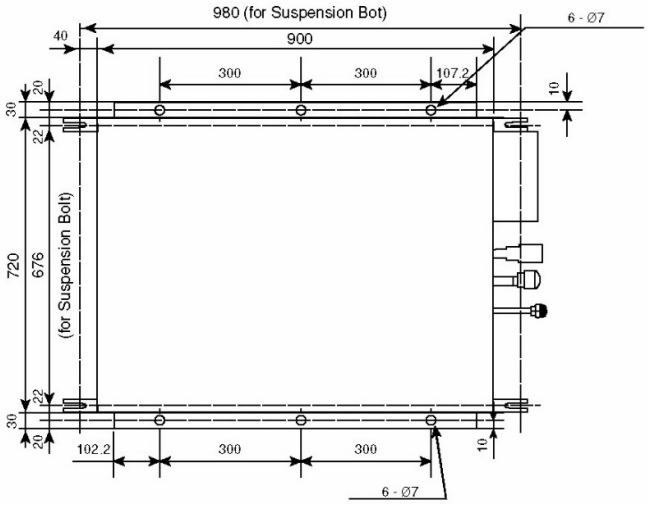

2.6. OUTDOOR: RAC-25NPE, RAC-35NPE

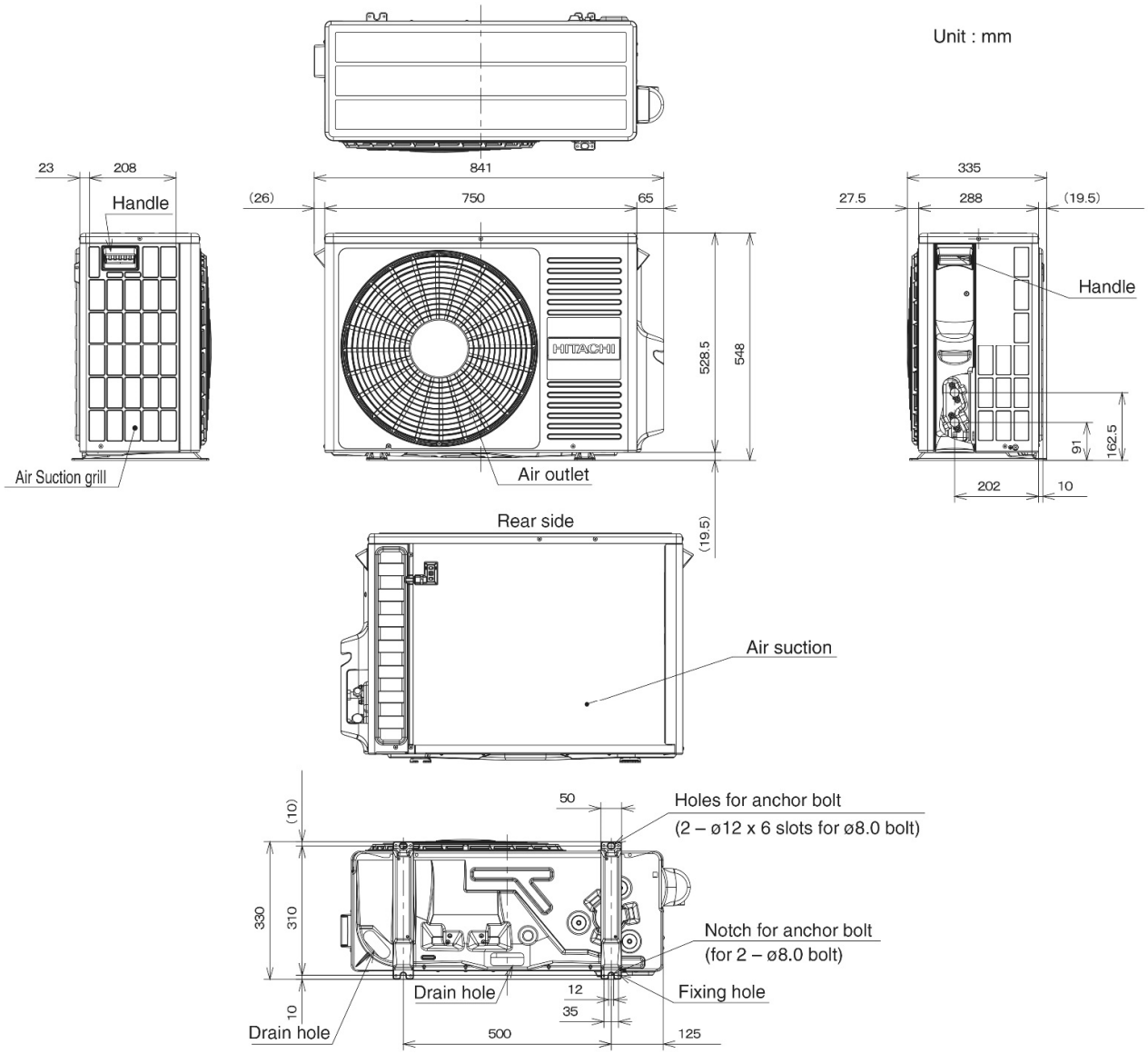

2.7. OUTDOOR: RAC-50NPE, RAC-60NPE

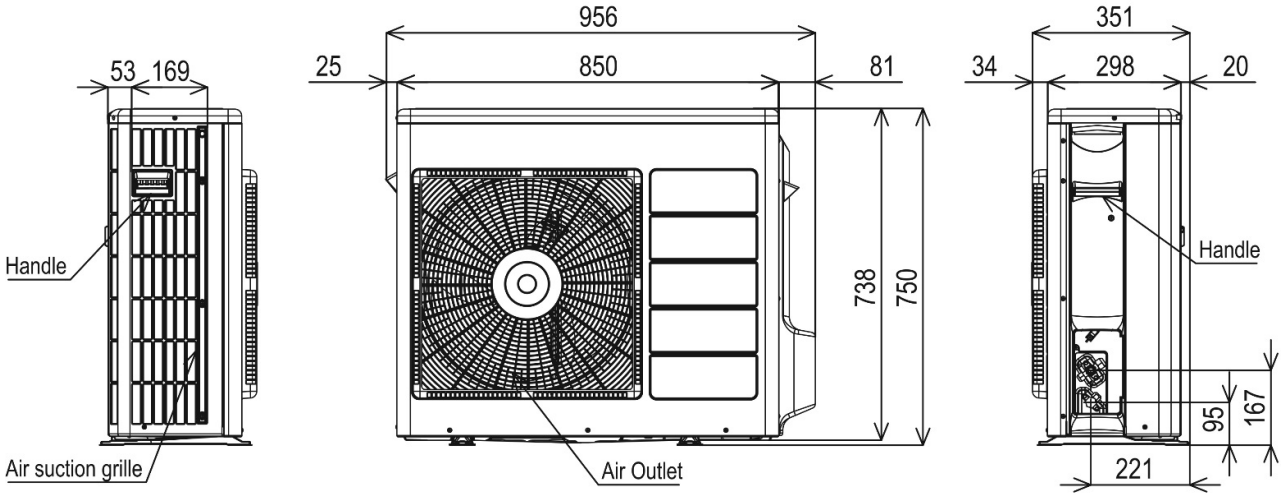

Unit : mm

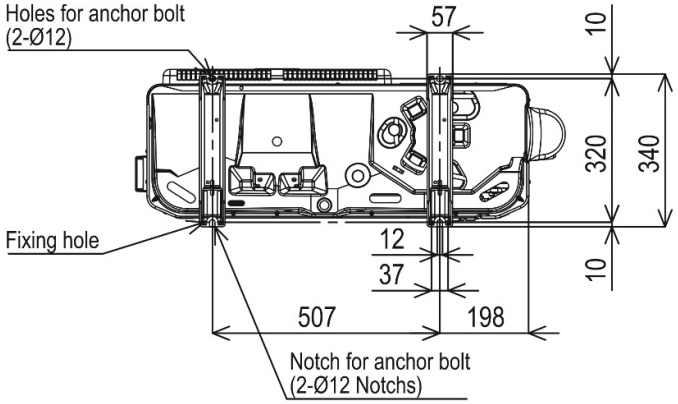

3 CAPACITIES TABLE

3.1. CAPACITY CHARACTERISTIC CURVES

The following charts show the characteristics of outdoor unit capacity, which corresponds with the operating ambient temperature of outdoor unit.

Conditions:
①Pipe length / height difference : 5m / 0m
②Indoor fan speed at High mode
③Capacity loss due to white frost and defrost operation is not included.

3.1.1. RAK-50RPE1/RAC-50NPE

COOLING [50Hz, 230V]

INDOOR		OUTDOOR TEMPERATURE (°CDB)																				
EWB	EDB	-10			21			27			32			35			40			43		
°C	°C	TC	SHC	PI	TC	SHC	PI	TC	SHC	PI	TC	SHC	PI	TC	SHC	PI	TC	SHC	PI	TC	SHC	PI
12.0	18	3662	2490	746	4424	3541	945	4094	3269	1113	4100	3292	1306	3950	3148	1363	3700	2967	1463	3550	2822	1519
14.0	20	3662	2490	746	4753	3541	945	4424	3303	1126	4400	3292	1321	4250	3184	1377	3950	2967	1477	3800	2858	1548
16.0	22	3662	2650	757	5082	3541	957	4706	3303	1139	4700	3292	1335	4550	3184	1406	4250	2967	1505	4100	2858	1562
18.0	25	3926	2841	769	5412	3848	969	4988	3575	1153	5000	3582	1349	4800	3437	1406	4500	3220	1519	4300	3075	1576
19.0	27	4059	2937	781	5600	4052	982	5176	3746	1166	5200	3763	1363	5000	3618	1420	4700	3401	1519	4500	3256	1576
22.0	30	4500	2905	781	6212	4018	982	5741	3712	1166	5750	3727	1377	5550	3582	1434	5000	3473	1576	4650	3401	1661
24.0	32	4809	2905	792	6635	4018	994	6118	3712	1179	6150	3727	1377	5900	3582	1448	5200	3546	1619	4750	3509	1718

HEATING [50Hz, 230V]

INDOOR		OUTDOOR TEMPERATURE (°CDB)																				
	EDB	-15			-10			-7			-5			0			7			10			15		
	°C	TC	SHC	PI	TC	SHC	PI	TC	SHC	PI	TC	SHC	PI	TC	SHC	PI	TC	SHC	PI	TC	SHC	PI	TC	SHC	PI
	16	2160	0	1110	3420	0	1140	3899	0	1188	4218	0	1221	5136	0	1367	6066	0	1385	6618	0	1422	7638	0	1493
	18	2130	0	1125	3390	0	1155	3861	0	1214	4176	0	1253	5082	0	1401	6036	0	1455	6594	0	1485	7608	0	1563
	20	2100	0	1140	3360	0	1170	3828	0	1233	4140	0	1275	5040	0	1425	6000	0	1500	6450	0	1553	7560	0	1635
	22	2070	0	1155	3330	0	1185	3780	0	1259	4080	0	1308	4986	0	1460	5964	0	1560	6522	0	1610	7524	0	1703
	24	2040	0	1170	3300	0	1200	3747	0	1283	4044	0	1340	4944	0	1494	5928	0	1620	6486	0	1671	7416	0	1772

EWB : Evaporator Wet Bulb temperature (°C)
EDB : Evaporator Dry Bulb temperature (°C)
(°CDB) : Outdoor Unit Inlet Air Dry Temperature (°C)

TC : Total Capacity (W)
SHC : Sensible Heating Capacity (W)
PI : Power Input

3.1.2. RAK-60RPE/RAC-60NPE

COOLING [50Hz, 230V]

INDOOR		OUTDOOR TEMPERATURE (°CDB)																				
EWB	EDB	-10			21			27			32			35			40			43		
°C	°C	TC	SHC	PI	TC	SHC	PI	TC	SHC	PI	TC	SHC	PI	TC	SHC	PI	TC	SHC	PI	TC	SHC	PI
12.0	18	3474	2327	710	4984	3931	1068	4613	3628	1259	4920	3892	1573	4740	3721	1642	4440	3507	1761	4260	3336	1830
14.0	20	3474	2327	710	5355	3931	1068	4984	3666	1274	5280	3892	1590	5100	3764	1659	4740	3507	1778	4560	3379	1864
16.0	22	3474	2477	721	5727	3931	1082	5302	3666	1288	5640	3892	1607	5460	3764	1693	5100	3507	1813	4920	3379	1881
18.0	25	3726	2656	732	6098	4271	1096	5620	3969	1303	6000	4234	1625	5760	4063	1693	5400	3807	1830	5160	3635	1898
19.0	27	3851	2745	743	6310	4498	1110	5833	4158	1318	6240	4448	1642	6000	4277	1710	5640	4020	1830	5400	3849	1898
22.0	30	4270	2715	743	6999	4460	1110	6469	4120	1318	6900	4405	1659	6660	4234	1727	6000	4106	1898	5580	4020	2001
24.0	32	4563	2715	754	7476	4460	1124	6893	4120	1333	7380	4405	1659	7080	4234	1744	6240	4191	1949	5700	4149	2069

HEATING [50Hz, 230V]

INDOOR		OUTDOOR TEMPERATURE (°CDB)																				
	EDB	-15			-10			-7			-5			0			7			10			15		
	°C	TC	SHC	PI	TC	SHC	PI	TC	SHC	PI	TC	SHC	PI	TC	SHC	PI	TC	SHC	PI	TC	SHC	PI	TC	SHC	PI
	16	2520	0	1362	3990	0	1398	4548	0	1457	4921	0	1498	5992	0	1676	7077	0	1698	7721	0	1744	8911	0	1831
	18	2485	0	1380	3955	0	1417	4505	0	1489	4872	0	1536	5929	0	1719	7042	0	1785	7693	0	1822	8876	0	1917
	20	2450	0	1398	3920	0	1435	4466	0	1512	4830	0	1564	5880	0	1748	7000	0	1840	7525	0	1904	8820	0	2006
	22	2415	0	1417	3885	0	1454	4410	0	1544	4760	0	1604	5817	0	1790	6958	0	1914	7609	0	1974	8778	0	2088
	24	2380	0	1435	3850	0	1472	4372	0	1574	4718	0	1643	5768	0	1833	6916	0	1987	7567	0	2050	8652	0	2173

EWB : Evaporator Wet Bulb temperature (°C)
EDB : Evaporator Dry Bulb temperature (°C)
(°CDB) : Outdoor Unit Inlet Air Dry Temperature (°C)

TC : Total Capacity (W)
SHC : Sensible Heating Capacity (W)
PI : Power Input

3.1.3. RAI-25RPE/RAC-25NPE

COOLING [50Hz, 230V]

INDOOR		OUTDOOR TEMPERATURE (°CDB)																				
EWB	EDB	-10			21			27			32			35			40			43		
°C	°C	TC	SHC	PI	TC	SHC	PI	TC	SHC	PI	TC	SHC	PI	TC	SHC	PI	TC	SHC	PI	TC	SHC	PI
12.0	18	2,099	1,955	358	1,749	1,918	313	1,619	1,770	369	2,050	2,255	547	1,975	2,156	571	1,850	2,032	613	1,775	1,933	637
14.0	20	2,099	1,955	358	1,879	1,918	313	1,749	1,789	373	2,200	2,255	553	2,125	2,181	577	1,975	2,032	619	1,900	1,958	649
16.0	22	2,099	2,081	364	2,009	1,918	317	1,860	1,789	378	2,350	2,255	559	2,275	2,181	589	2,125	2,032	631	2,050	1,958	655
18.0	25	2,251	2,231	369	2,140	2,084	321	1,972	1,936	382	2,500	2,453	565	2,400	2,354	589	2,250	2,205	637	2,150	2,106	660
19.0	27	2,327	2,306	375	2,214	2,194	325	2,047	2,029	386	2,600	2,577	571	2,500	2,478	595	2,350	2,329	637	2,250	2,230	660
22.0	30	2,580	2,281	375	2,456	2,176	325	2,270	2,010	386	2,875	2,552	577	2,775	2,453	601	2,500	2,379	660	2,325	2,329	696
24.0	32	2,757	2,281	381	2,623	2,176	329	2,419	2,010	391	3,075	2,552	577	2,950	2,453	607	2,600	2,428	678	2,375	2,404	720

HEATING [50Hz, 230V]

INDOOR		OUTDOOR TEMPERATURE (°CDB)																				
	EDB	-15			-10			-7			-5			0			7			10			15		
	°C	TC	SHC	PI	TC	SHC	PI	TC	SHC	PI	TC	SHC	PI	TC	SHC	PI	TC	SHC	PI	TC	SHC	PI	TC	SHC	PI
	16	1260	0	648	1995	0	665	2274	0	693	2461	0	712	2996	0	797	3539	0	808	3861	0	830	4456	0	871
	18	1243	0	656	1978	0	674	2252	0	708	2436	0	731	2965	0	817	3521	0	849	3847	0	866	4438	0	912
	20	1225	0	665	1960	0	683	2233	0	719	2415	0	744	2940	0	831	3500	0	875	3763	0	906	4410	0	954
	22	1208	0	674	1943	0	691	2205	0	734	2380	0	763	2909	0	851	3479	0	910	3805	0	939	4389	0	993
	24	1190	0	683	1925	0	700	2186	0	748	2359	0	781	2884	0	872	3458	0	945	3784	0	975	4326	0	1033

3.1.4. RAI-35RPE/RAC-35NPE

COOLING [50Hz, 230V]

INDOOR		OUTDOOR TEMPERATURE (°CDB)																				
EWB	EDB	-10			21			27			32			35			40			43		
°C	°C	TC	SHC	PI	TC	SHC	PI	TC	SHC	PI	TC	SHC	PI	TC	SHC	PI	TC	SHC	PI	TC	SHC	PI
12.0	18	2,939	2,193	527	2,448	2,151	460	2,266	1,985	542	2,870	2,529	805	2,765	2,418	840	2,590	2,279	901	2,485	2,168	936
14.0	20	2,939	2,193	527	2,631	2,151	460	2,448	2,006	549	3,080	2,529	814	2,975	2,446	849	2,765	2,279	910	2,660	2,195	954
16.0	22	2,939	2,333	535	2,813	2,151	466	2,605	2,006	555	3,290	2,529	823	3,185	2,446	866	2,975	2,279	928	2,870	2,195	963
18.0	25	3,151	2,502	543	2,995	2,337	472	2,761	2,171	562	3,500	2,751	831	3,360	2,640	866	3,150	2,473	936	3,010	2,362	971
19.0	27	3,257	2,586	552	3,100	2,461	478	2,865	2,275	568	3,640	2,890	840	3,500	2,779	875	3,290	2,612	936	3,150	2,501	971
22.0	30	3,612	2,558	552	3,438	2,440	478	3,178	2,254	568	4,025	2,862	849	3,885	2,751	884	3,500	2,668	971	3,255	2,612	1,024
24.0	32	3,859	2,558	560	3,673	2,440	484	3,386	2,254	574	4,305	2,862	849	4,130	2,751	893	3,640	2,723	998	3,325	2,696	1,059

HEATING [50Hz, 230V]

INDOOR		OUTDOOR TEMPERATURE (°CDB)																				
	EDB	-15			-10			-7			-5			0			7			10			15		
	°C	TC	SHC	PI	TC	SHC	PI	TC	SHC	PI	TC	SHC	PI	TC	SHC	PI	TC	SHC	PI	TC	SHC	PI	TC	SHC	PI
	16	1728	0	910	2736	0	935	3119	0	974	3374	0	1001	4109	0	1121	4853	0	1135	5294	0	1166	6110	0	1224
	18	1704	0	923	2712	0	947	3089	0	4174	3341	0	1027	4066	0	1149	4829	0	1193	5275	0	1218	6086	0	1282
	20	1680	0	935	2688	0	959	3062	0	4242	3312	0	1046	4032	0	1169	4800	0	1230	5160	0	1273	6048	0	1341
	22	1656	0	947	2664	0	972	3024	0	4329	3264	0	1073	3989	0	1197	4771	0	1279	5218	0	1320	6019	0	1396
	24	1632	0	959	2640	0	984	2998	0	4414	3235	0	1098	3955	0	1225	4742	0	1328	5189	0	1370	5933	0	1453

EWB : Evaporator Wet Bulb temperature (°C)
EDB : Evaporator Dry Bulb temperature (°C)
(°CDB) : Outdoor Unit Inlet Air Dry Temperature (°C)

TC : Total Capacity (W)
SHC : Sensible Heating Capacity (W)
PI : Power Input

3.1.5. RAI-50RPE/RAC-50NPE

COOLING [50Hz, 230V]

INDOOR		OUTDOOR TEMPERATURE (°CDB)																				
EWB	EDB	-10			21			27			32			35			40			43		
°C	°C	TC	SHC	PI	TC	SHC	PI	TC	SHC	PI	TC	SHC	PI	TC	SHC	PI	TC	SHC	PI	TC	SHC	PI
12.0	18	3365	2303	685	4065	3275	868	3762	3023	1023	4100	3313	1306	3950	3168	1363	3700	2986	1463	3550	2840	1519
14.0	20	3365	2303	685	4368	3275	868	4065	3055	1035	4400	3313	1321	4250	3204	1377	3950	2986	1477	3800	2876	1548
16.0	22	3365	2450	696	4670	3275	879	4324	3055	1047	4700	3313	1335	4550	3204	1406	4250	2986	1505	4100	2876	1562
18.0	25	3608	2627	707	4973	3558	891	4584	3306	1059	5000	3605	1349	4800	3459	1406	4500	3240	1519	4300	3095	1576
19.0	27	3730	2716	717	5146	3747	902	4757	3464	1071	5200	3787	1363	5000	3641	1420	4700	3423	1519	4500	3277	1576
22.0	30	4135	2686	717	5708	3716	902	5276	3432	1071	5750	3750	1377	5550	3605	1434	5000	3495	1576	4650	3423	1661
24.0	32	4419	2686	728	6097	3716	914	5622	3432	1083	6150	3750	1377	5900	3605	1448	5200	3568	1619	4750	3532	1718

HEATING [50Hz, 230V]

INDOOR		OUTDOOR TEMPERATURE (°CDB)																				
	EDB	-15			-10			-7			-5			0			7			10			15		
	°C	TC	SHC	PI	TC	SHC	PI	TC	SHC	PI	TC	SHC	PI	TC	SHC	PI	TC	SHC	PI	TC	SHC	PI	TC	SHC	PI
	16	2160	0	1162	3420	0	1193	3899	0	1243	4218	0	1278	5136	0	1430	6066	0	1449	6618	0	1488	7638	0	1562
	18	2130	0	1178	3390	0	1209	3861	0	1270	4176	0	1311	5082	0	1466	6036	0	1523	6594	0	1554	7608	0	1636
	20	2100	0	1193	3360	0	1225	3828	0	1291	4140	0	1335	5040	0	1492	6000	0	1570	6450	0	1625	7560	0	1711
	22	2070	0	1209	3330	0	1240	3780	0	1317	4080	0	1369	4986	0	1528	5964	0	1633	6522	0	1685	7524	0	1782
	24	2040	0	1225	3300	0	1256	3747	0	1343	4044	0	1402	4944	0	1564	5928	0	1696	6486	0	1749	7416	0	1854

3.1.6. RAI-60RPE/RAC-60NPE

COOLING [50Hz, 230V]

INDOOR		OUTDOOR TEMPERATURE (°CDB)																				
EWB	EDB	-10			21			27			32			35			40			43		
°C	°C	TC	SHC	PI	TC	SHC	PI	TC	SHC	PI	TC	SHC	PI	TC	SHC	PI	TC	SHC	PI	TC	SHC	PI
12.0	18	3474	2227	710	4984	3762	1068	4613	3472	1259	4920	3725	1573	4740	3561	1642	4440	3356	1761	4260	3193	1830
14.0	20	3474	2227	710	5355	3762	1068	4984	3509	1274	5280	3725	1590	5100	3602	1659	4740	3356	1778	4560	3233	1864
16.0	22	3474	2370	721	5727	3762	1082	5302	3509	1288	5640	3725	1607	5460	3602	1693	5100	3356	1813	4920	3233	1881
18.0	25	3726	2541	732	6098	4087	1096	5620	3798	1303	6000	4052	1625	5760	3888	1693	5400	3643	1830	5160	3479	1898
19.0	27	3851	2627	743	6310	4304	1110	5833	3979	1318	6240	4257	1642	6000	4093	1710	5640	3847	1830	5400	3684	1898
22.0	30	4270	2599	743	6999	4268	1110	6469	3943	1318	6900	4216	1659	6660	4052	1727	6000	3929	1898	5580	3847	2001
24.0	32	4563	2599	754	7476	4268	1124	6893	3943	1333	7380	4216	1659	7080	4052	1744	6240	4011	1949	5700	3970	2069

HEATING [50Hz, 230V]

INDOOR		OUTDOOR TEMPERATURE (°CDB)																				
	EDB	-15			-10			-7			-5			0			7			10			15		
	°C	TC	SHC	PI	TC	SHC	PI	TC	SHC	PI	TC	SHC	PI	TC	SHC	PI	TC	SHC	PI	TC	SHC	PI	TC	SHC	PI
	16	2520	0	1362	3990	0	1398	4548	0	1457	4921	0	1498	5992	0	1676	7077	0	1698	7721	0	1744	8911	0	1831
	18	2485	0	1380	3955	0	1417	4505	0	1489	4872	0	1536	5929	0	1719	7042	0	1785	7693	0	1822	8876	0	1917
	20	2450	0	1398	3920	0	1435	4466	0	1512	4830	0	1564	5880	0	1748	7000	0	1840	7525	0	1904	8820	0	2006
	22	2415	0	1417	3885	0	1454	4410	0	1544	4760	0	1604	5817	0	1790	6958	0	1914	7609	0	1974	8778	0	2088
	24	2380	0	1435	3850	0	1472	4372	0	1574	4718	0	1643	5768	0	1833	6916	0	1987	7567	0	2050	8652	0	2173

EWB : Evaporator Wet Bulb temperature (°C)
EDB : Evaporator Dry Bulb temperature (°C)
(°CDB) : Outdoor Unit Inlet Air Dry Temperature (°C)

TC : Total Capacity (W)
SHC : Sensible Heating Capacity (W)
PI : Power Input

3.1.7. RAD-25RPE/RAC-25NPE

COOLING [50Hz, 230V]

INDOOR		OUTDOOR TEMPERATURE (°CDB)																				
EWB	EDB	-10			21			27			32			35			40			43		
°C	°C	TC	SHC	PI	TC	SHC	PI	TC	SHC	PI	TC	SHC	PI	TC	SHC	PI	TC	SHC	PI	TC	SHC	PI
12.0	18	1,930	1,604	329	1,503	1,470	269	1,391	1,357	317	2,050	2,011	547	1,975	1,923	571	1,850	1,812	613	1,775	1,724	637
14.0	20	1,930	1,604	329	1,615	1,470	269	1,503	1,371	321	2,200	2,011	553	2,125	1,945	577	1,975	1,812	619	1,900	1,746	649
16.0	22	1,930	1,706	335	1,727	1,470	272	1,599	1,371	324	2,350	2,011	559	2,275	1,945	589	2,125	1,812	631	2,050	1,746	655
18.0	25	2,070	1,830	340	1,839	1,597	276	1,695	1,484	328	2,500	2,188	565	2,400	2,100	589	2,250	1,967	637	2,150	1,879	660
19.0	27	2,140	1,891	345	1,903	1,682	280	1,759	1,555	332	2,600	2,298	571	2,500	2,210	595	2,350	2,077	637	2,250	1,989	660
22.0	30	2,372	1,871	345	2,110	1,668	280	1,951	1,541	332	2,875	2,276	577	2,775	2,188	601	2,500	2,122	660	2,325	2,077	696
24.0	32	2,535	1,871	350	2,254	1,668	283	2,078	1,541	336	3,075	2,276	577	2,950	2,188	607	2,600	2,166	678	2,375	2,144	720

HEATING [50Hz, 230V]

INDOOR		OUTDOOR TEMPERATURE (°CDB)																				
	EDB	-15			-10			-7			-5			0			7			10			15		
	°C	TC	SHC	PI	TC	SHC	PI	TC	SHC	PI	TC	SHC	PI	TC	SHC	PI	TC	SHC	PI	TC	SHC	PI	TC	SHC	PI
	16	1260	0	648	1995	0	665	2274	0	693	2461	0	712	2996	0	797	3539	0	808	3861	0	830	4456	0	871
	18	1243	0	656	1978	0	674	2252	0	708	2436	0	731	2965	0	817	3521	0	849	3847	0	866	4438	0	912
	20	1225	0	665	1960	0	683	2233	0	719	2415	0	744	2940	0	831	3500	0	875	3763	0	906	4410	0	954
	22	1208	0	674	1943	0	691	2205	0	734	2380	0	763	2909	0	851	3479	0	910	3805	0	939	4389	0	993
	24	1190	0	683	1925	0	700	2186	0	748	2359	0	781	2884	0	872	3458	0	945	3784	0	975	4326	0	1033

3.1.8. RAD-35RPE/RAC-35NPE

COOLING [50Hz, 230V]

INDOOR		OUTDOOR TEMPERATURE (°CDB)																				
EWB	EDB	-10			21			27			32			35			40			43		
°C	°C	TC	SHC	PI	TC	SHC	PI	TC	SHC	PI	TC	SHC	PI	TC	SHC	PI	TC	SHC	PI	TC	SHC	PI
12.0	18	3,648	2,464	706	3,290	2,616	668	3,045	2,414	787	2,870	2,289	869	2,765	2,188	907	2,590	2,062	973	2,485	1,962	1,011
14.0	20	3,648	2,464	706	3,535	2,616	668	3,290	2,440	796	3,080	2,289	879	2,975	2,213	917	2,765	2,062	983	2,660	1,987	1,030
16.0	22	3,648	2,621	717	3,780	2,616	677	3,500	2,440	806	3,290	2,289	888	3,185	2,213	936	2,975	2,062	1,002	2,870	1,987	1,040
18.0	25	3,912	2,811	728	4,025	2,842	686	3,710	2,641	815	3,500	2,490	898	3,360	2,389	936	3,150	2,238	1,011	3,010	2,138	1,049
19.0	27	4,044	2,906	739	4,165	2,993	694	3,850	2,767	824	3,640	2,616	907	3,500	2,515	945	3,290	2,364	1,011	3,150	2,264	1,049
22.0	30	4,483	2,874	739	4,620	2,968	694	4,270	2,741	824	4,025	2,590	917	3,885	2,490	954	3,500	2,414	1,049	3,255	2,364	1,106
24.0	32	4,791	2,874	750	4,935	2,968	703	4,550	2,741	833	4,305	2,590	917	4,130	2,490	964	3,640	2,465	1,077	3,325	2,440	1,143

HEATING [50Hz, 230V]

INDOOR		OUTDOOR TEMPERATURE (°CDB)																				
	EDB	-15			-10			-7			-5			0			7			10			15		
	°C	TC	SHC	PI	TC	SHC	PI	TC	SHC	PI	TC	SHC	PI	TC	SHC	PI	TC	SHC	PI	TC	SHC	PI	TC	SHC	PI
	16	1728	0	932	2736	0	958	3119	0	998	3374	0	1026	4109	0	1148	4853	0	1163	5294	0	1194	6110	0	1254
	18	1704	0	945	2712	0	970	3089	0	1019	3341	0	1052	4066	0	1177	4829	0	1222	5275	0	1247	6086	0	1313
	20	1680	0	958	2688	0	983	3062	0	1036	3312	0	1071	4032	0	1197	4800	0	1260	5160	0	1304	6048	0	1373
	22	1656	0	970	2664	0	995	3024	0	1057	3264	0	1099	3989	0	1226	4771	0	1310	5218	0	1352	6019	0	1430
	24	1632	0	983	2640	0	1008	2998	0	1078	3235	0	1125	3955	0	1255	4742	0	1361	5189	0	1404	5933	0	1488

EWB : Evaporator Wet Bulb temperature (°C)
EDB : Evaporator Dry Bulb temperature (°C)
(°CDB) : Outdoor Unit Inlet Air Dry Temperature (°C)

TC : Total Capacity (W)
SHC : Sensible Heating Capacity (W)
PI : Power Input

3.1.9. RAD-50RPE/RAC-50NPE

COOLING [50Hz, 230V]

INDOOR		OUTDOOR TEMPERATURE (°CDB)																				
EWB	EDB	-10			21			27			32			35			40			43		
°C	°C	TC	SHC	PI	TC	SHC	PI	TC	SHC	PI	TC	SHC	PI	TC	SHC	PI	TC	SHC	PI	TC	SHC	PI
12.0	18	3831	2983	780	4483	4110	957	4149	3794	1128	4100	3770	1306	3950	3605	1363	3700	3398	1463	3550	3232	1519
14.0	20	3831	2983	780	4817	4110	957	4483	3834	1142	4400	3770	1321	4250	3646	1377	3950	3398	1477	3800	3273	1548
16.0	22	3831	3174	792	5151	4110	970	4769	3834	1155	4700	3770	1335	4550	3646	1406	4250	3398	1505	4100	3273	1562
18.0	25	4108	3404	805	5485	4466	983	5055	4150	1168	5000	4102	1349	4800	3936	1406	4500	3688	1519	4300	3522	1576
19.0	27	4246	3519	817	5675	4703	995	5246	4347	1181	5200	4309	1363	5000	4143	1420	4700	3895	1519	4500	3729	1576
22.0	30	4708	3480	817	6295	4663	995	5818	4308	1181	5750	4268	1377	5550	4102	1434	5000	3978	1576	4650	3895	1661
24.0	32	5031	3480	829	6725	4663	1008	6200	4308	1195	6150	4268	1377	5900	4102	1448	5200	4060	1619	4750	4019	1718

HEATING [50Hz, 230V]

INDOOR		OUTDOOR TEMPERATURE (°CDB)																				
	EDB	-15			-10			-7			-5			0			7			10			15		
	°C	TC	SHC	PI	TC	SHC	PI	TC	SHC	PI	TC	SHC	PI	TC	SHC	PI	TC	SHC	PI	TC	SHC	PI	TC	SHC	PI
	16	2160	0	1162	3420	0	1193	3899	0	1243	4218	0	1278	5136	0	1430	6066	0	1449	6618	0	1488	7638	0	1562
	18	2130	0	1178	3390	0	1209	3861	0	1270	4176	0	1311	5082	0	1466	6036	0	1523	6594	0	1554	7608	0	1636
	20	2100	0	1193	3360	0	1225	3828	0	1291	4140	0	1335	5040	0	1492	6000	0	1570	6450	0	1625	7560	0	1711
	22	2070	0	1209	3330	0	1240	3780	0	1317	4080	0	1369	4986	0	1528	5964	0	1633	6522	0	1685	7524	0	1782
	24	2040	0	1225	3300	0	1256	3747	0	1343	4044	0	1402	4944	0	1564	5928	0	1696	6486	0	1749	7416	0	1854

3.1.10. RAD-60RPE/RAC-60NPE

COOLING [50Hz, 230V]

INDOOR		OUTDOOR TEMPERATURE (°CDB)																				
EWB	EDB	-10			21			27			32			35			40			43		
°C	°C	TC	SHC	PI	TC	SHC	PI	TC	SHC	PI	TC	SHC	PI	TC	SHC	PI	TC	SHC	PI	TC	SHC	PI
12.0	18	3782	2581	773	4926	3957	1056	4559	3653	1244	4920	3965	1573	4740	3790	1642	4440	3572	1761	4260	3398	1830
14.0	20	3782	2581	773	5293	3957	1056	4926	3691	1259	5280	3965	1590	5100	3834	1659	4740	3572	1778	4560	3442	1864
16.0	22	3782	2746	785	5660	3957	1070	5241	3691	1273	5640	3965	1607	5460	3834	1693	5100	3572	1813	4920	3442	1881
18.0	25	4056	2945	797	6027	4300	1083	5555	3995	1288	6000	4313	1625	5760	4139	1693	5400	3877	1830	5160	3703	1898
19.0	27	4192	3044	809	6236	4528	1097	5765	4186	1303	6240	4531	1642	6000	4357	1710	5640	4095	1830	5400	3921	1898
22.0	30	4648	3011	809	6917	4490	1097	6393	4148	1303	6900	4487	1659	6660	4313	1727	6000	4182	1898	5580	4095	2001
24.0	32	4967	3011	821	7389	4490	1111	6813	4148	1317	7380	4487	1659	7080	4313	1744	6240	4269	1949	5700	4226	2069

HEATING [50Hz, 230V]

INDOOR		OUTDOOR TEMPERATURE (°CDB)																				
	EDB	-15			-10			-7			-5			0			7			10			15		
	°C	TC	SHC	PI	TC	SHC	PI	TC	SHC	PI	TC	SHC	PI	TC	SHC	PI	TC	SHC	PI	TC	SHC	PI	TC	SHC	PI
	16	2520	0	1362	3990	0	1398	4548	0	1457	4921	0	1498	5992	0	1676	7077	0	1698	7721	0	1744	8911	0	1831
	18	2485	0	1380	3955	0	1417	4505	0	1489	4872	0	1536	5929	0	1719	7042	0	1785	7693	0	1822	8876	0	1917
	20	2450	0	1398	3920	0	1435	4466	0	1512	4830	0	1564	5880	0	1748	7000	0	1840	7525	0	1904	8820	0	2006
	22	2415	0	1417	3885	0	1454	4410	0	1544	4760	0	1604	5817	0	1790	6958	0	1914	7609	0	1974	8778	0	2088
	24	2380	0	1435	3850	0	1472	4372	0	1574	4718	0	1643	5768	0	1833	6916	0	1987	7567	0	2050	8652	0	2173

EWB : Evaporator Wet Bulb temperature (°C)
EDB : Evaporator Dry Bulb temperature (°C)
(°CDB) : Outdoor Unit Inlet Air Dry Temperature (°C)

TC : Total Capacity (W)
SHC : Sensible Heating Capacity (W)
PI : Power Input

3.2. CORRECTION FACTORS ACCORDING TO PIPING LENGTH

Correction Factor for **Cooling Capacity** according to Piping Length

The cooling capacity should be corrected according to the following formula:

CCA = CC x F

CCA: Actual Corrected Cooling Capacity (kcal/h)
CC: Cooling Capacity in the Performance Table (kcal/h)
F: Correction Factor Based on the Equivalent Piping Length

Correction Factor for **Heating Capacity** according to Piping Length

The heating capacity should be corrected according to the following formula:

HCA= HC x F

HCA: Actual Corrected Heating Capacity (kcal/h)
HC: Heating Capacity in the Performance Table (kcal/h)
F: Correction Factor Based on the Equivalent Piping Length

The correction factors are shown in the following figure.

Equivalent Piping Length for:

- One 90º Elbow is 0.5m.
- One 180º Curve is 1.5m.

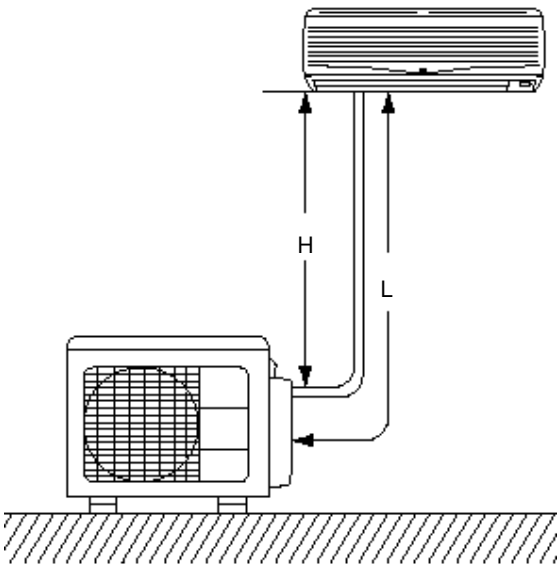

H: Vertical Distance Between Indoor Unit and Outdoor Units in Meters

L: Actual One-Way Piping Length Between Indoor Unit and Outdoor Unit in Meters

EL: Equivalent Total Distance Between Indoor Unit and Outdoor Unit in Meters (Equivalent One-Way Piping Length)

Models : RAC-25NPE

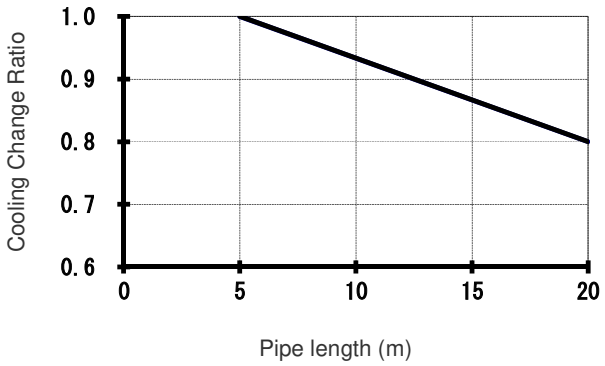

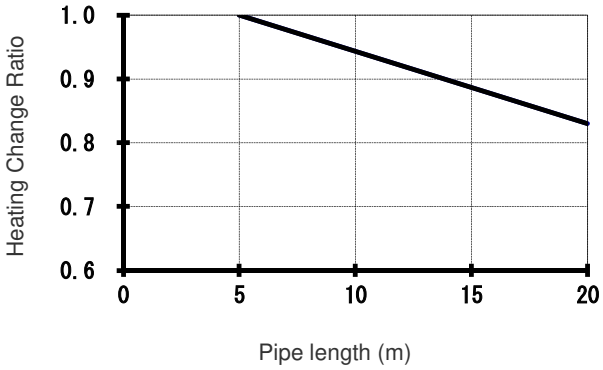

Models : RAC-35NPE

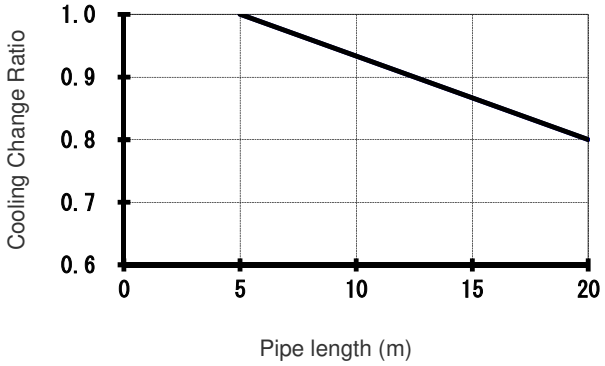

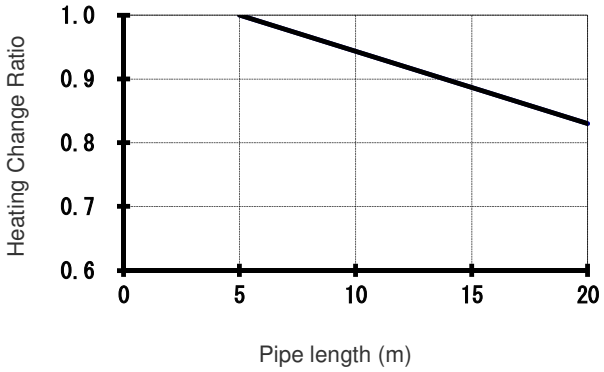

Models : RAC-50NPE

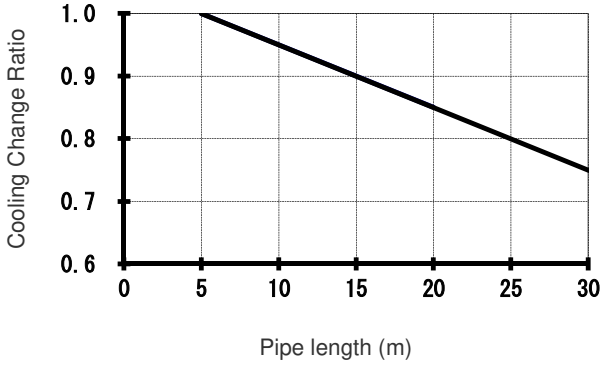

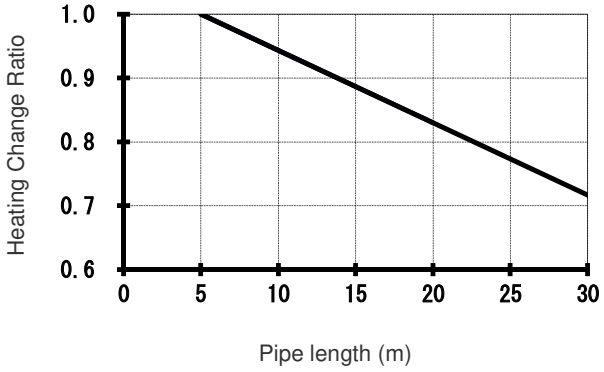

Models : RAC-60NPE

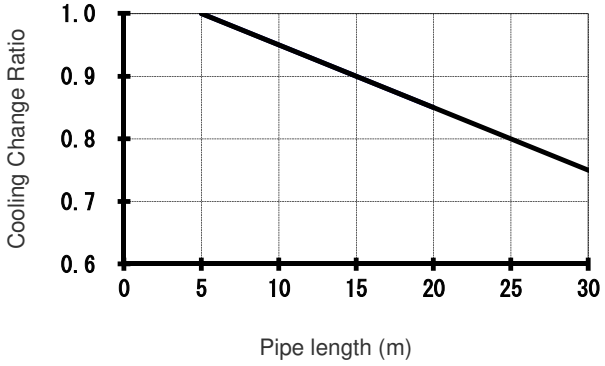

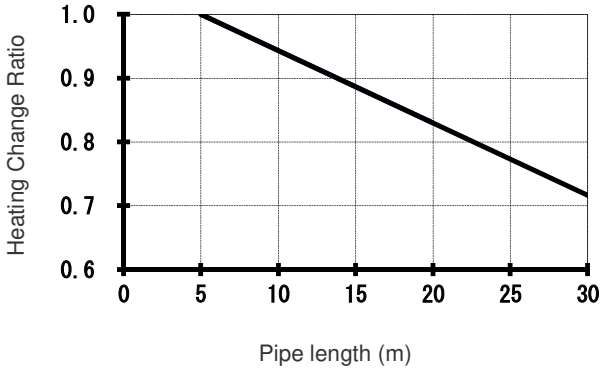

3.3. CORRECTION FACTORS ACCORDING TO DEFROSTING OPERATION

The heating capacity in the preceding paragraph, excludes the condition of the frost or the defrosting operation period. In consideration of the frost or the defrosting operation, the heating capacity is corrected by the equation below.

Corrected heating capacity = Defrost Correction factor x unit capacity

OUTDOOR TEMPERATURE (°CDB)	-15	-10	-7	-5	0	7	10	15
Correction factor (humidity rate85% RH)	0.95	0.95	0.89	0.85	0.81	1.0	1.0	1.0

Correction Factor

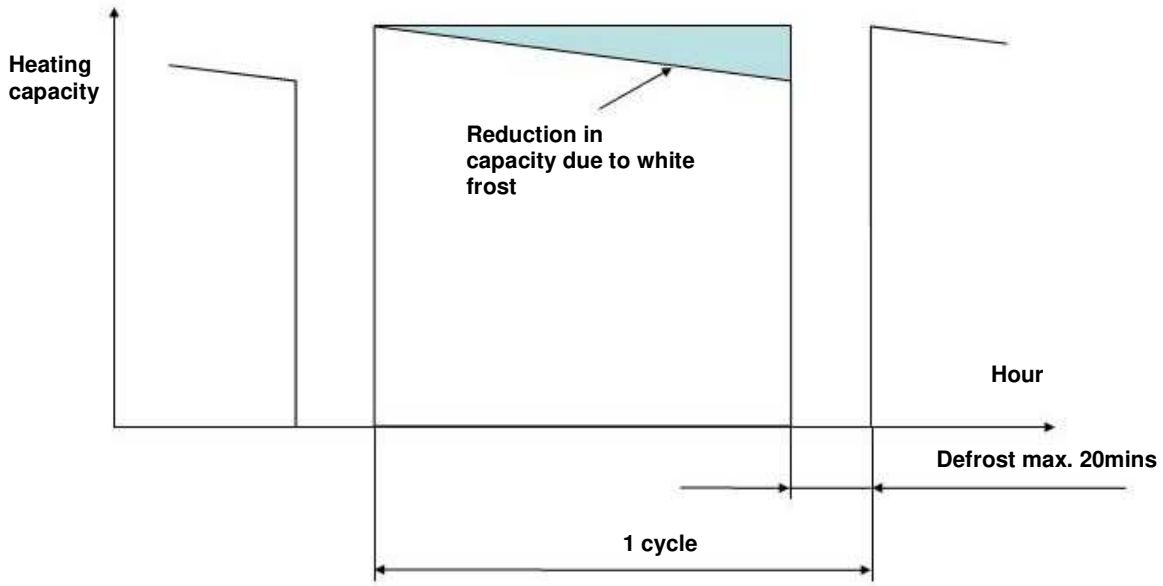

NOTE:
The correction factor is not valid for special conditions such as snowfall or operation in a transitional period.

4 SOUND DATA

4.1. RAC-25NPE

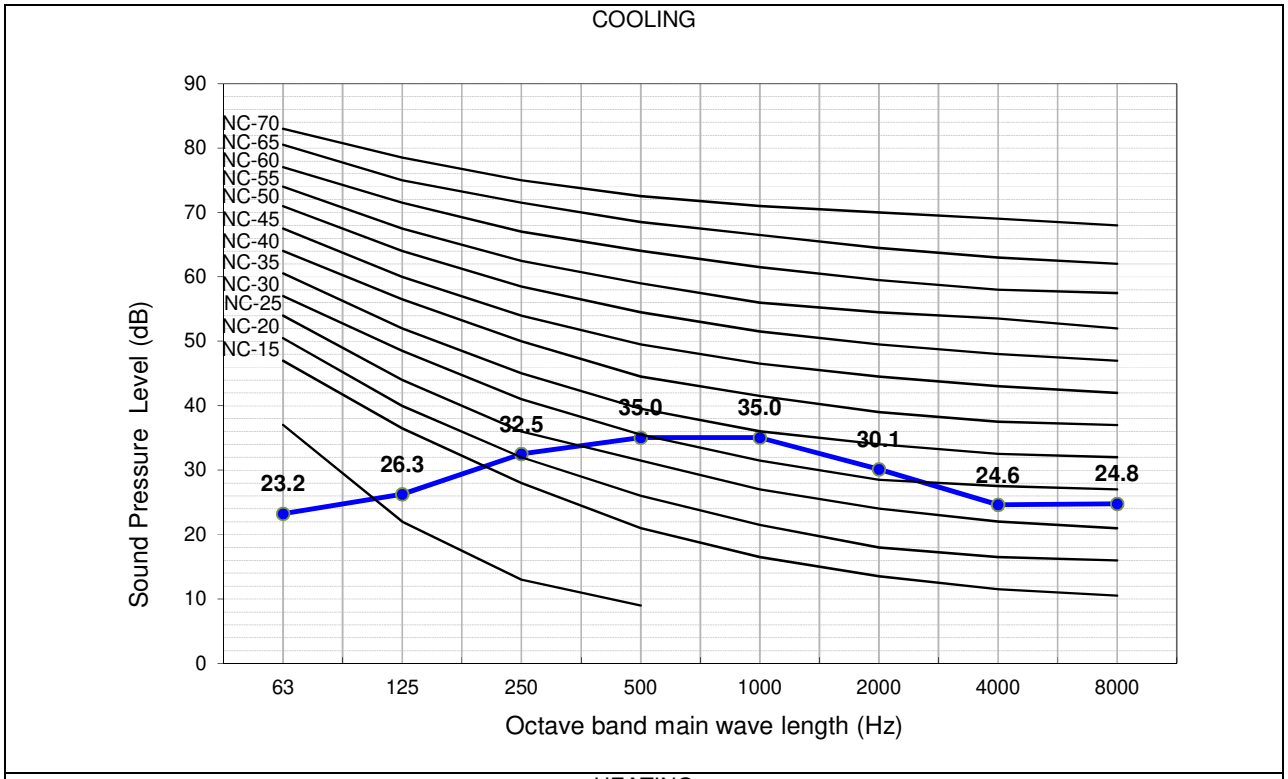

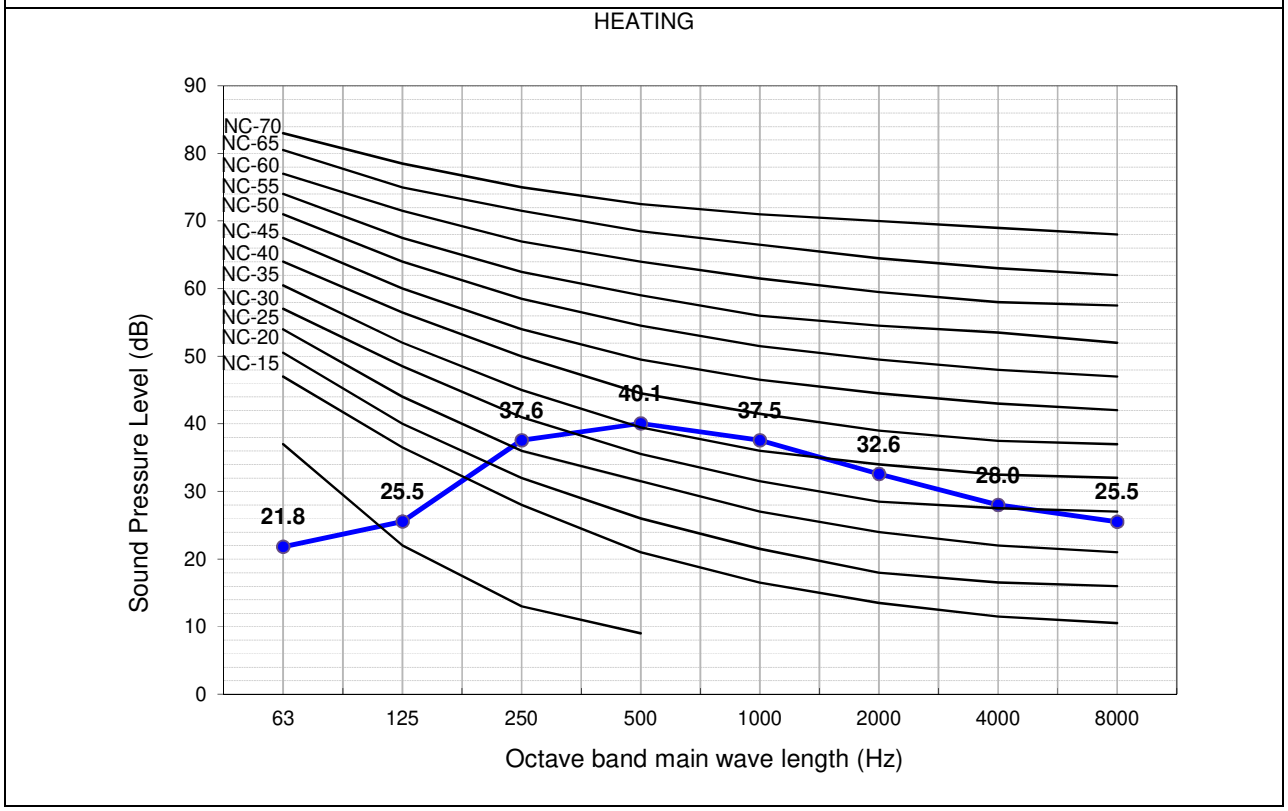

The Sound Pressure Level is based on the following conditions:

- *1 meter from the unit front surface and 1 meter from floor level*

The above data was measured in an anechoic chamber. Please take into consideration reflected sound of your specific site

4.2. RAC-35NPE

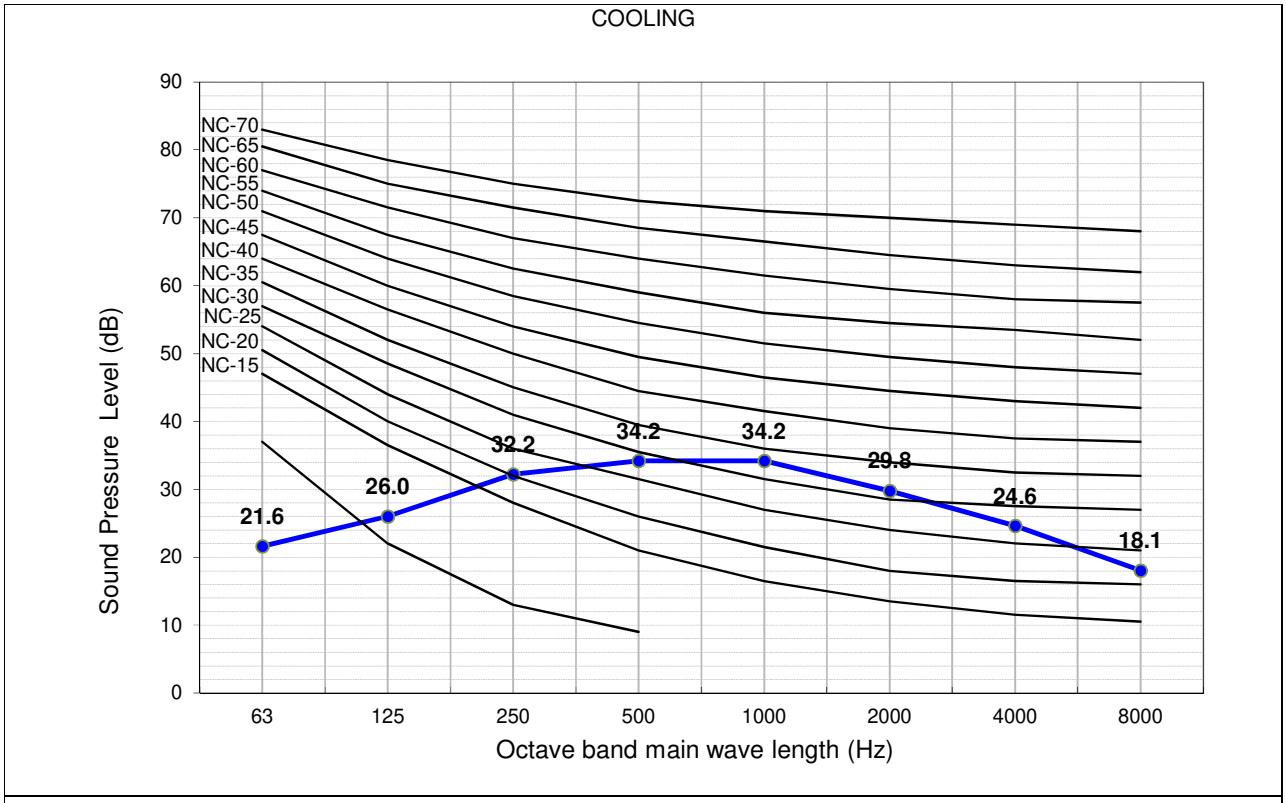

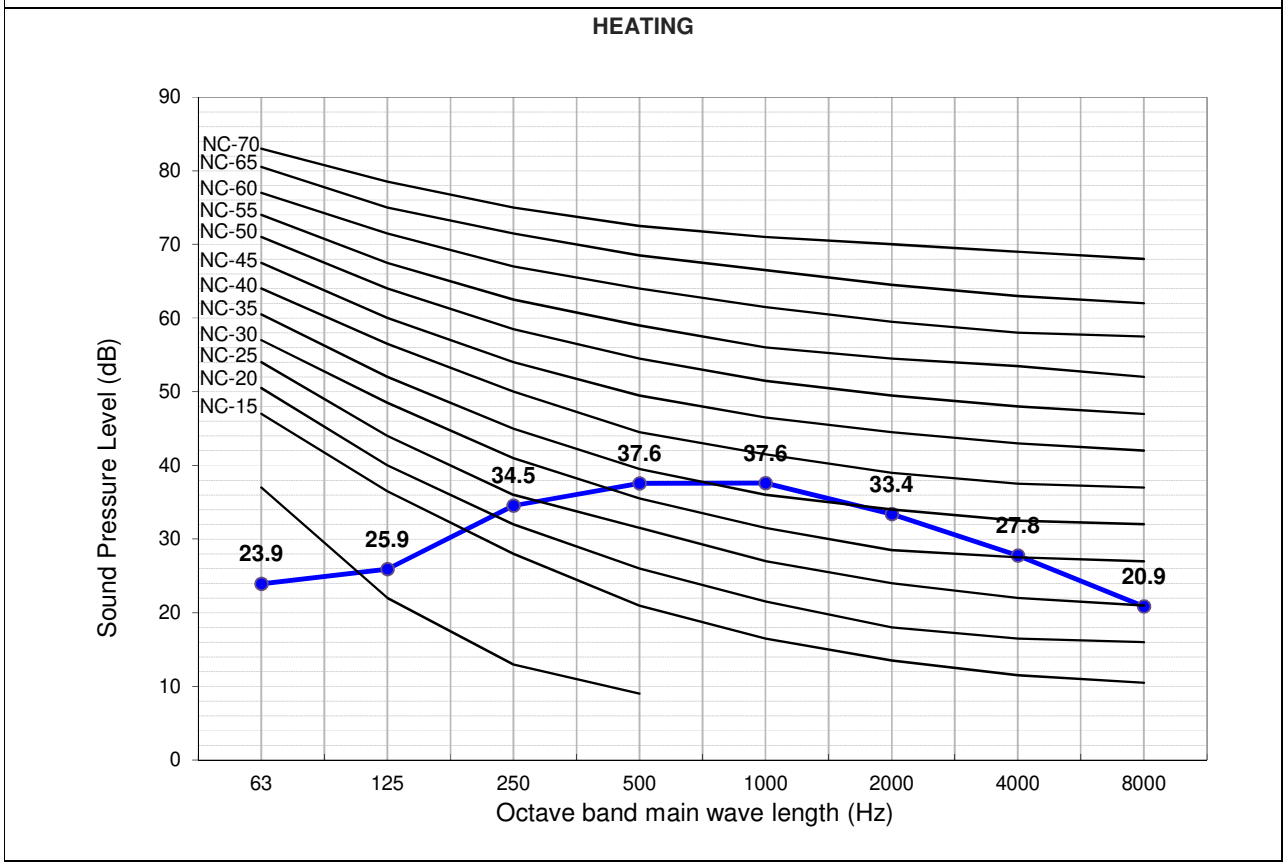

The Sound Pressure Level is based on the following conditions:

- *1 meter from the unit front surface and 1 meter from floor level*

The above data was measured in an anechoic chamber. Please take into consideration reflected sound of your specific site

4.3. RAC-50NPE

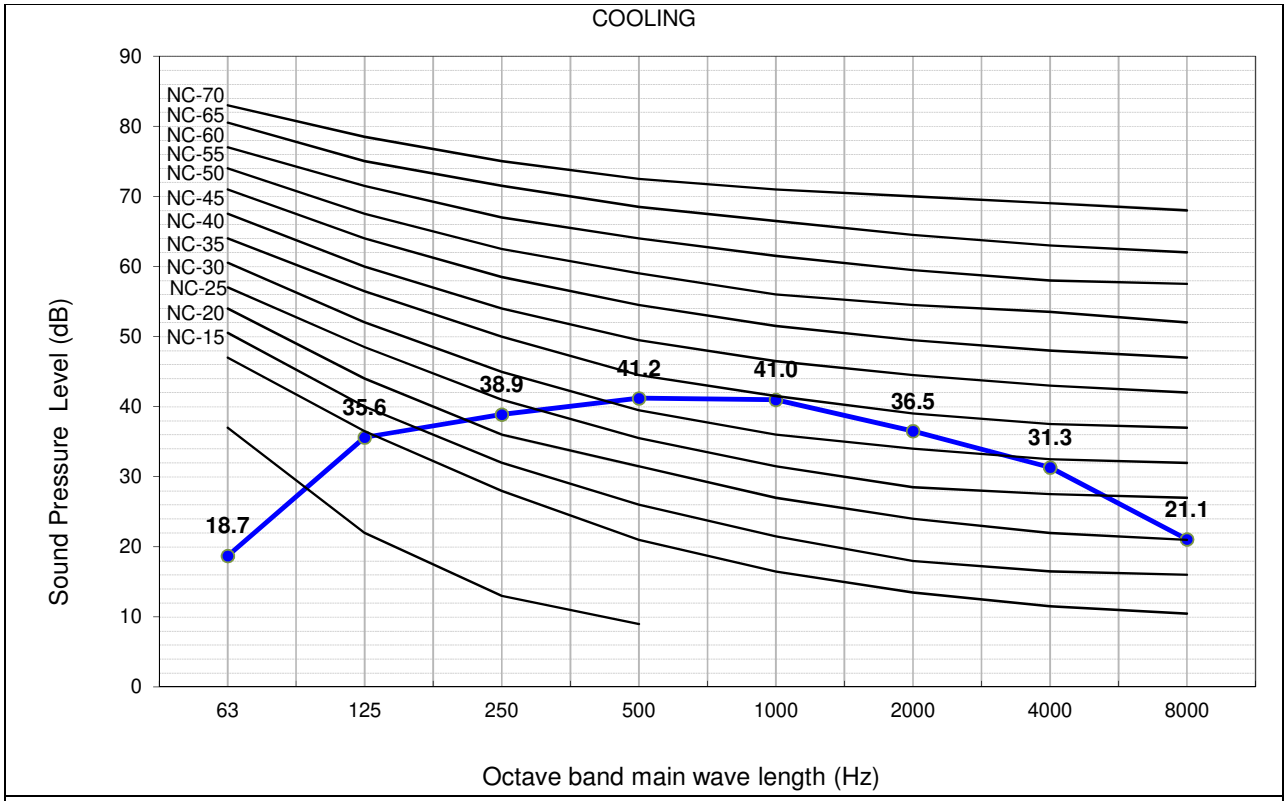

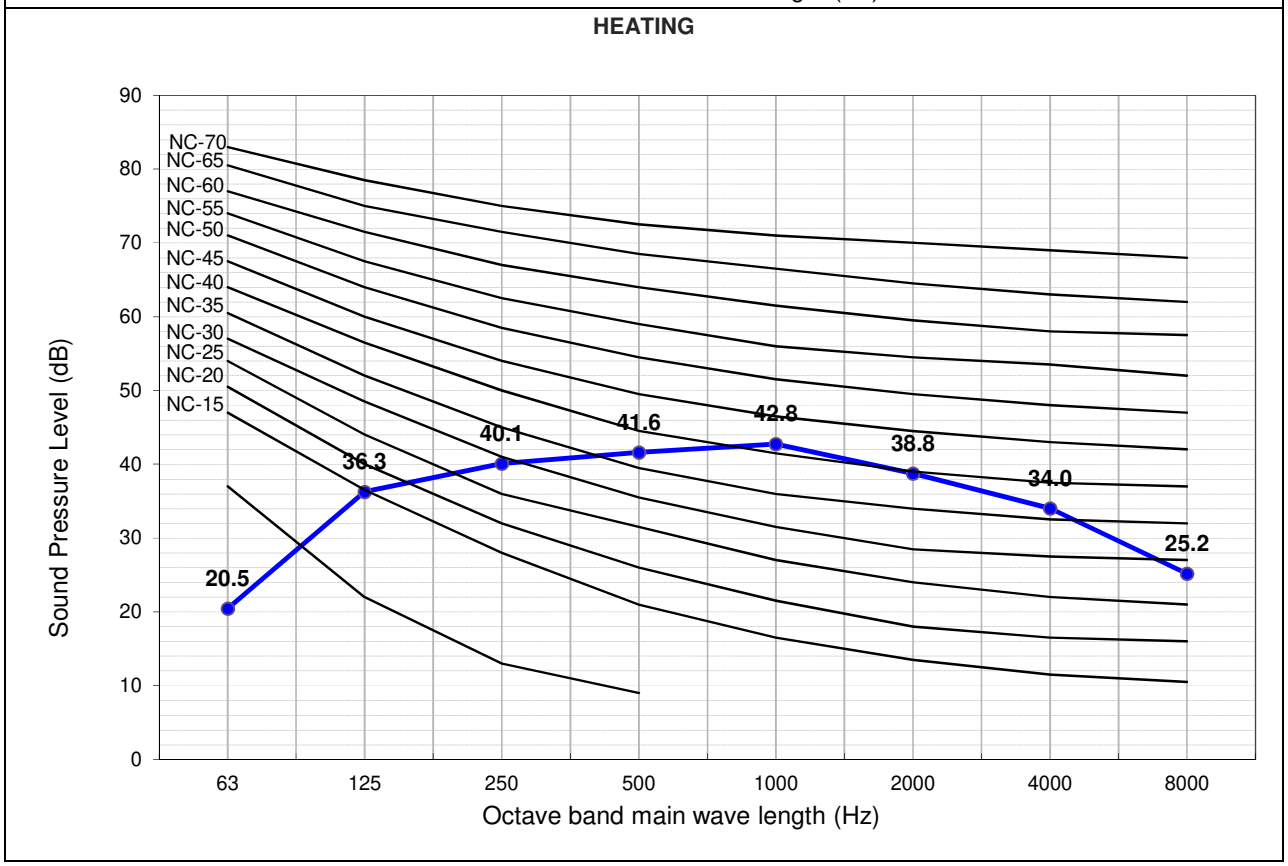

The Sound Pressure Level is based on the following conditions:

- *1 meter from the unit front surface and 1 meter from floor level*

The above data was measured in an anechoic chamber. Please take into consideration reflected sound of your specific site

4.4. RAC-60NPE

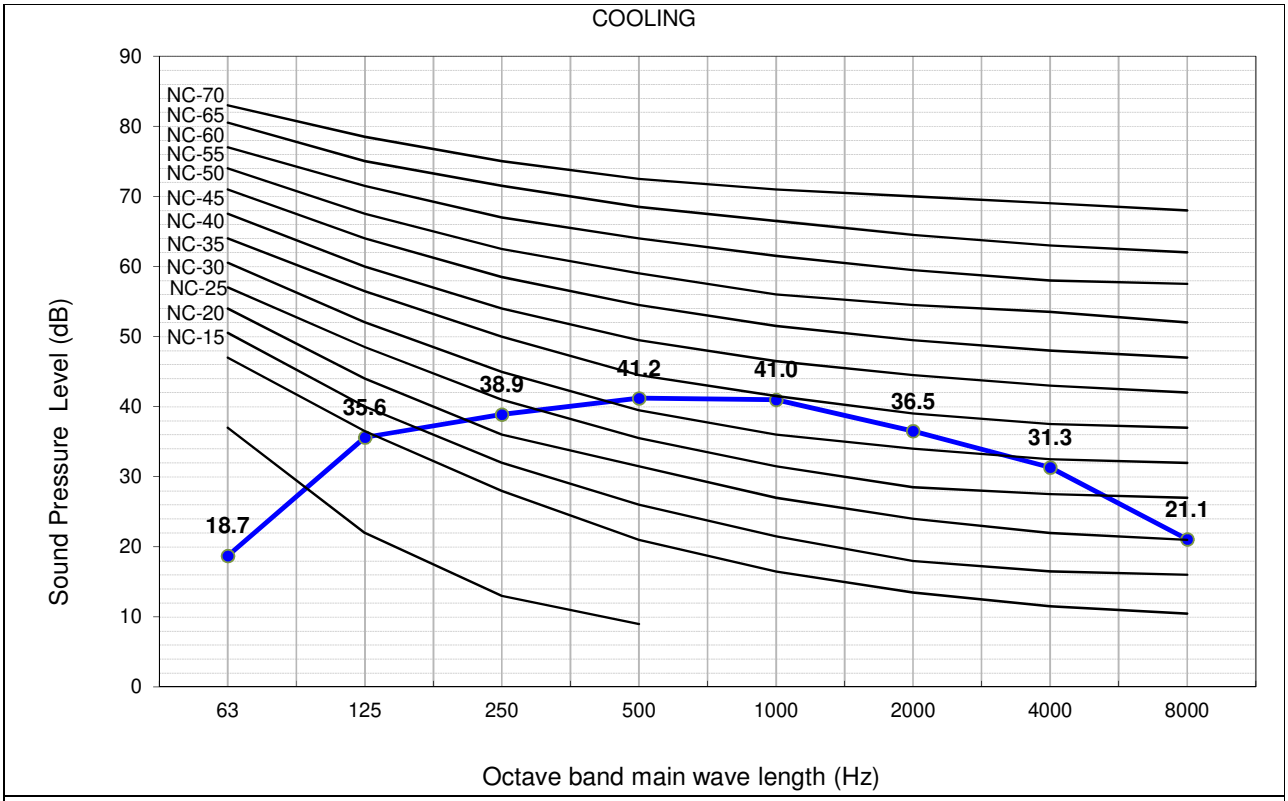

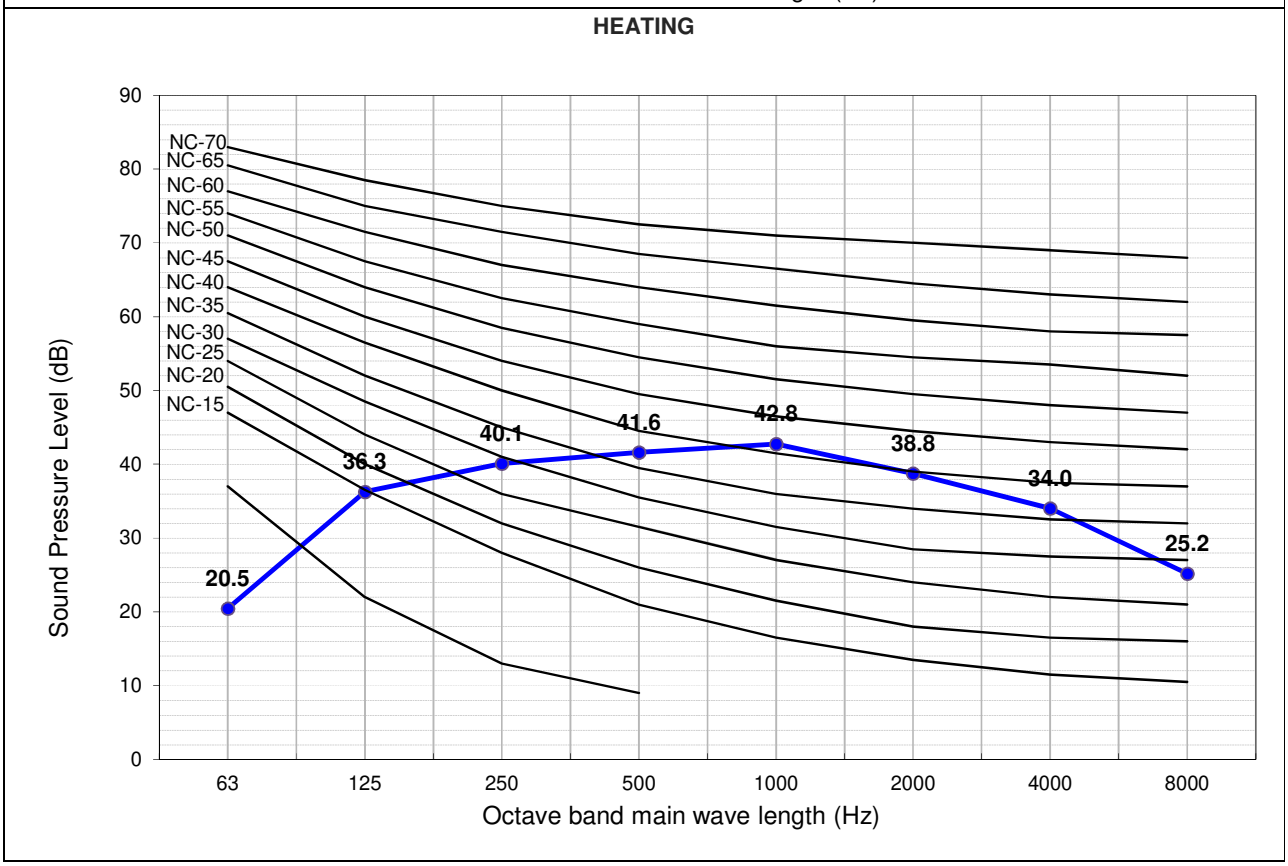

The Sound Pressure Level is based on the following conditions:

- *1 meter from the unit front surface and 1 meter from floor level*

The above data was measured in an anechoic chamber. Please take into consideration reflected sound of your specific site

5 WORKING RANGE

5.1. POWER SUPPLY

Working Voltage	216V ~ 264V
Voltage Imbalance	Within a 3% Deviation from Each Voltage at the Main Terminal of Outdoor Unit
Starting Voltage	Higher than 85% of the Rated Voltage

5.2. WORKING RANGE

Applicable models:

RAC-25NPE
RAC-35NPE
RAC-50NPE
RAC-60NPE

The temperature range is indicated in the following table.

Cooling

working range	min (ºC)	max (ºC)	rated (ºC)
outdoor	-15	46	35
indoor	21	32	27

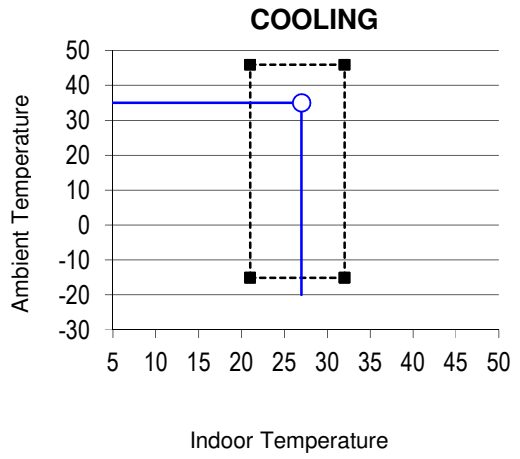

Heating

working range	min (ºC)	max (ºC)	rated (ºC)
outdoor	-15	24	7
indoor	20	27	20

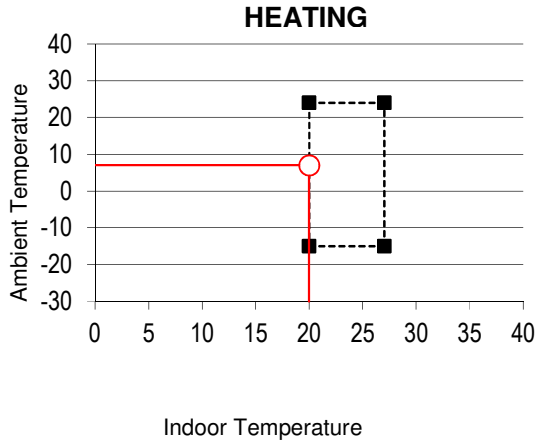

6 ELECTRICAL DATA

6.1. INDOOR UNIT

Model	Unit Main Power		Applicable Current		Indoor Fan Motor	
	VOL, PH, Hz	Fuse Rating (A)	STC	RNC	RNC	IPT
RAK-50RPE1	230, 1, 50	3.15	10	(C) 6.52 (H) 6.89	0.16	30
RAK-60RPE	230, 1, 50	3.15	10	(C) 7.85 (H) 8.45	0.16	30
RAI-25RPE	230, 1, 50	3.15	-	-	0.25	57
RAI-35RPE	230, 1, 50	3.15	-	-	0.25	57
RAI-50RPE	230, 1, 50	3.15	10	(C) 6.52 (H) 7.21	0.25	57
RAI-60RPE	230, 1, 50	3.15	10	(C) 7.85 (H) 8.45	0.25	57
RAD-25RPE	230, 1, 50	3.15	-	-	0.11	20
RAD-35RPE	230, 1, 50	3.15	-	-	0.11	20
RAD-50RPE	230, 1, 50	3.15	10	(C) 6.52 (H) 7.21	0.75	180
RAD-60RPE	230, 1, 50	3.15	10	(C) 7.85 (H) 8.45	0.75	180

VOL: Rated Unit Power Supply Voltage (V)
Hz: Frequency (Hz)
STC: Starting Current (A)
RNC: Running Current (A)
PH: Phase (ϕ)
IPT: Input (W)

6.2. OUTDOOR UNIT

Model	Unit Main Power				Compressor Motor					
	VOL, PH, Hz	Fuse Rating (A)	Min (V)	Max (V)	Locked Rotor Ampere (A)	STC	Cooling Operation		Heating Operation	
							RNC	IPT	RNC	IPT
RAC-25NPE	220-240, 1, 50	20	198	264	_	10	5.3	1460	5.3	1830
RAC-35NPE	220-240, 1, 50	20	198	264	_	10	5.3	1460	5.3	1830
RAC-50NPE	220-240, 1, 50/60	20	198	264	_	10	5.3	1460	5.3	1830
RAC-60NPE	220-240, 1, 50/60	20	198	264	_	10	5.3	1460	5.3	1830

VOL: Rated Unit Power Supply Voltage (V)
HZ: Frequency (Hz)
STC: Starting Current (A)
RNC: Running Current (A)
PH: Phase (ϕ)
IPT: Input (W)

NOTE:

1. *The above compressor data is based on 100% capacity combination of indoor units at the rated operating frequency*
2. *This data is based on the same conditions as the nominal heating and cooling capacities.*
3. *The compressor started by an inverter, resulting in extremely low starting current.*

7 WIRING DIAGRAM

7.1. RAK-50RPE1 / RAK-60RPE

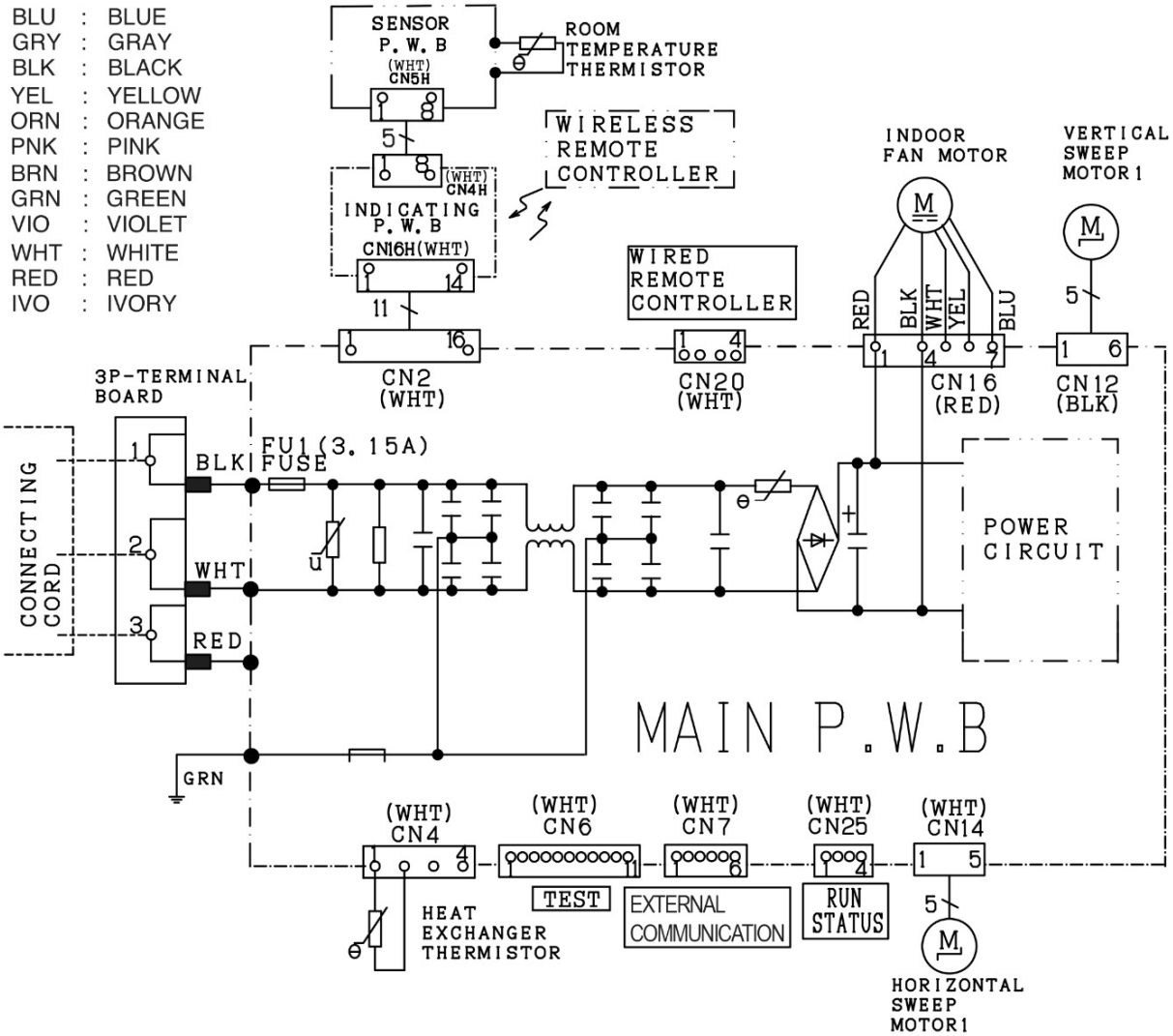

7.2. RAI-25RPE, RAI-35RPE, RAI-50RPE, RAI-60RPE

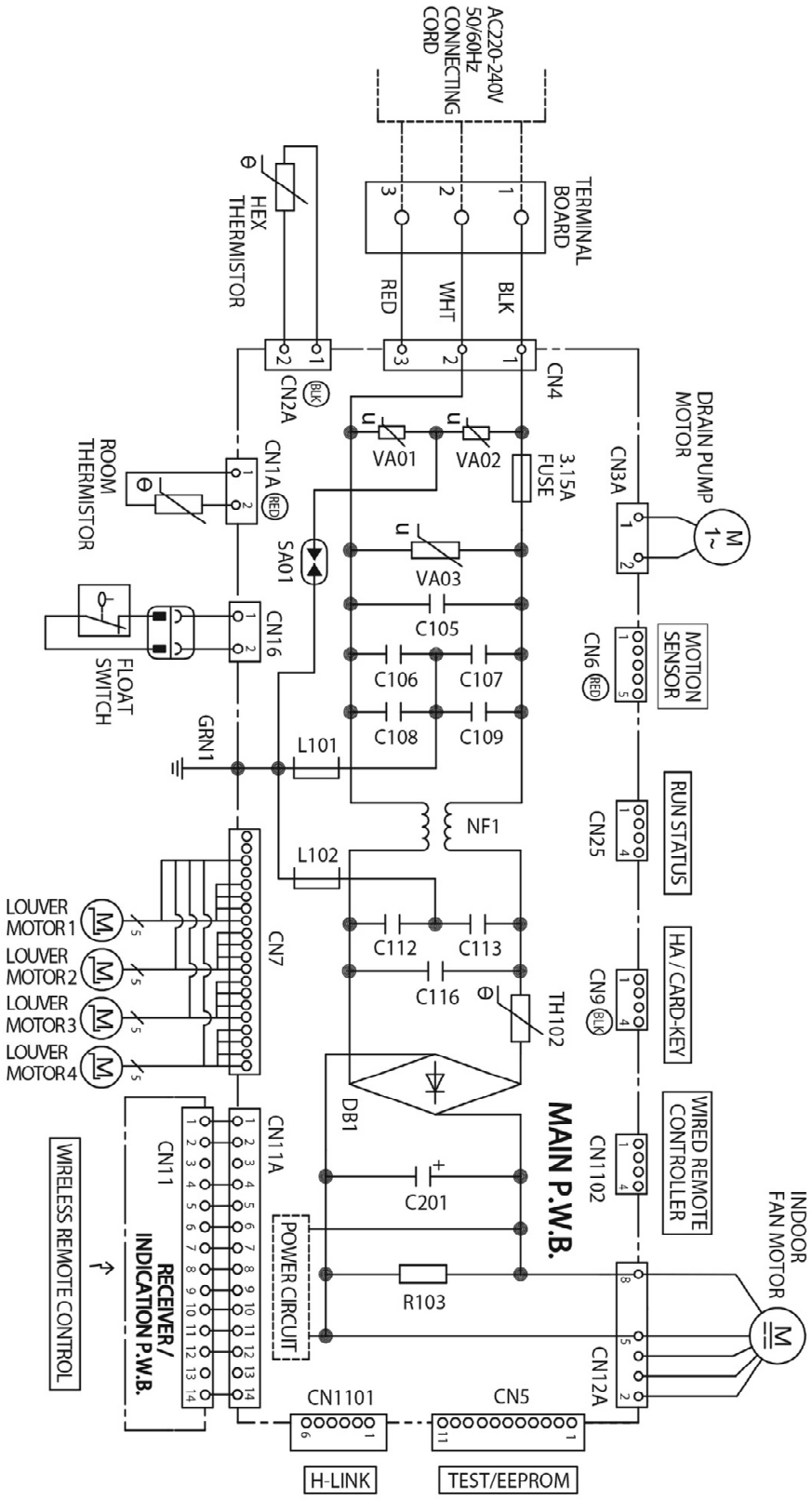

7.3. RAD-25RPE, RAD-35RPE

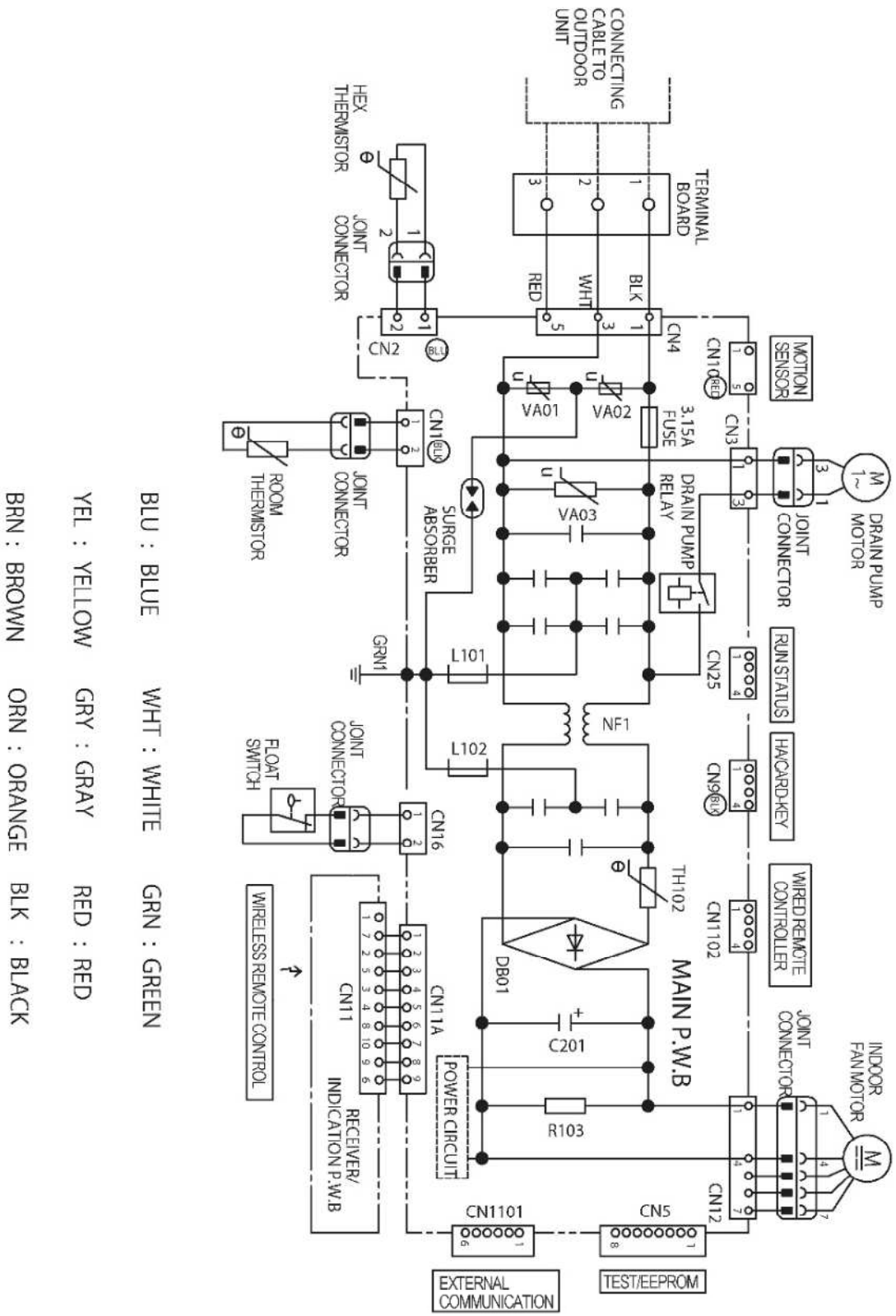

7.4. RAD-50RPE, RAD-60RPE

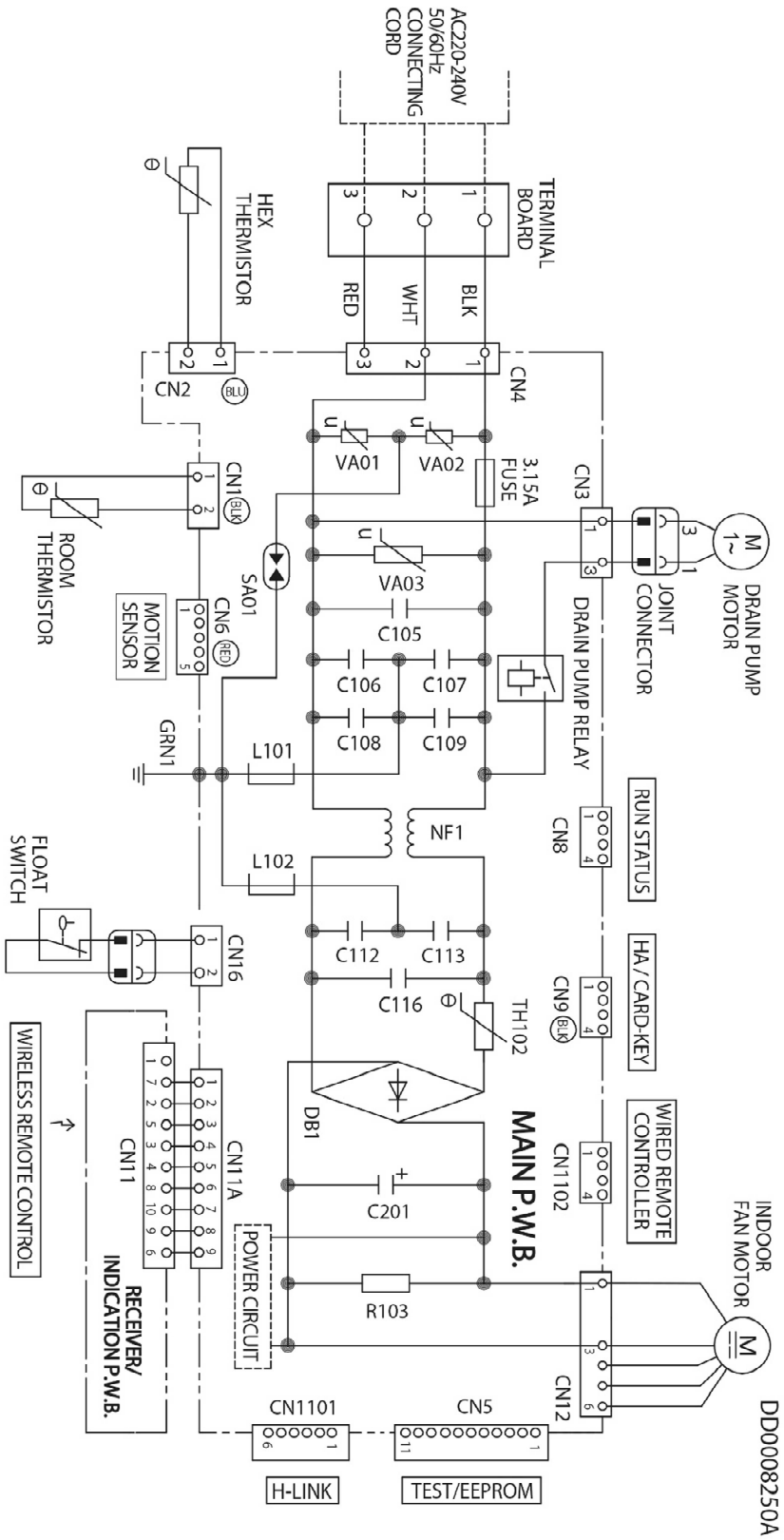

7.5. RAC-25NPE / RAC-35NPE

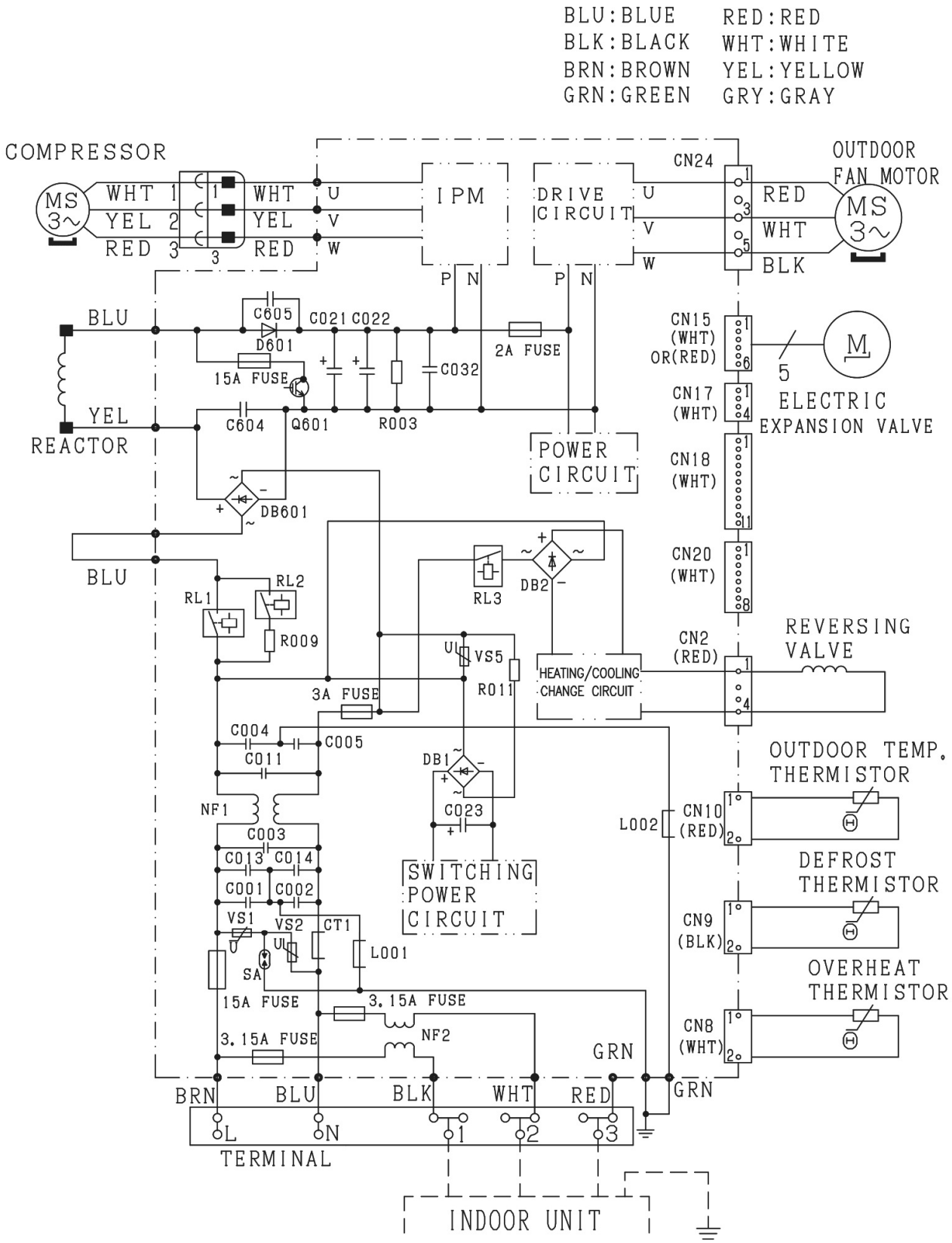

7.6. RAC-50NPE, RAC-60NPE

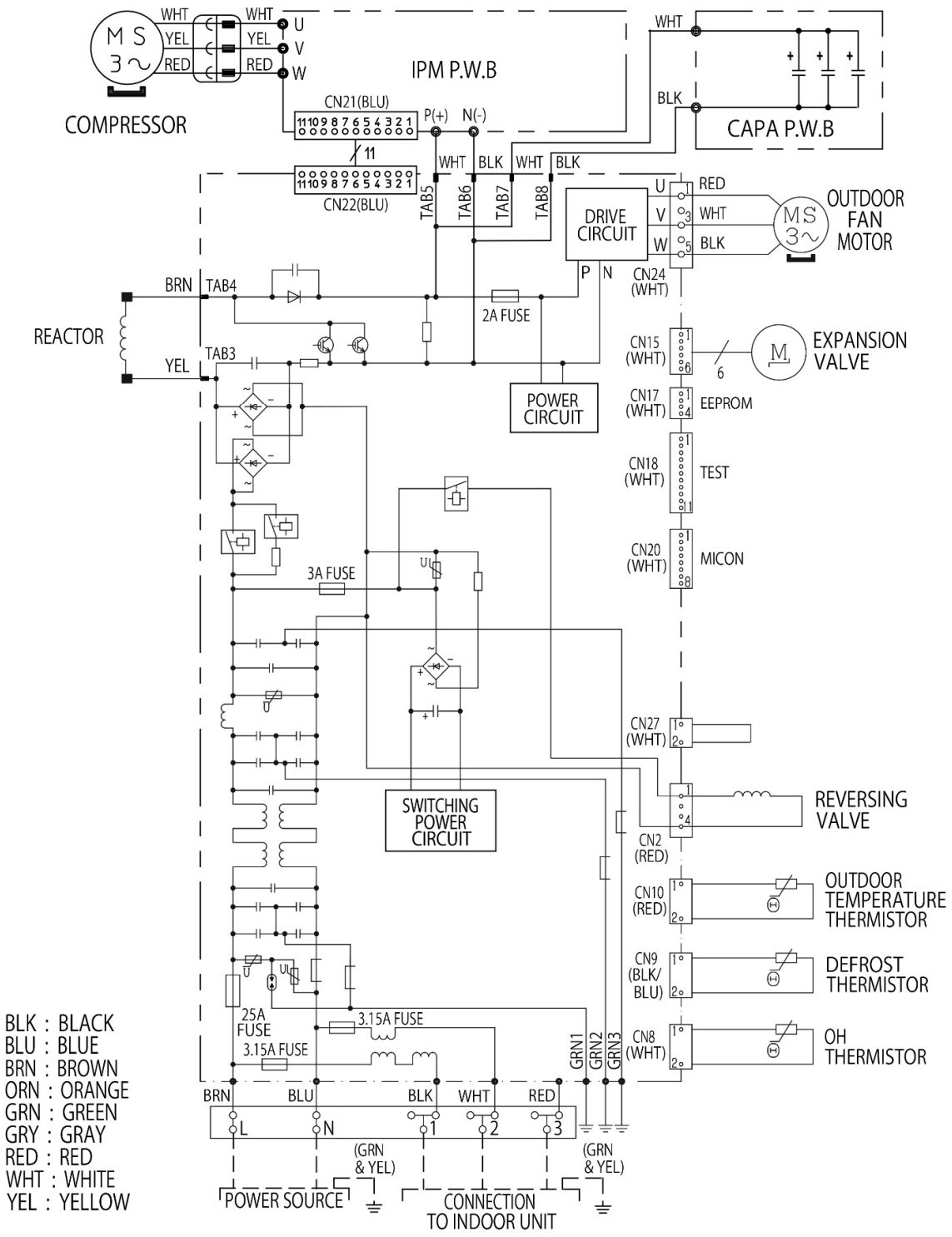

8 REFRIGERANT CYCLE

8.1. RAK-50RPE1/RAC-50NPE, RAK-60RPE/RAC-60NPE

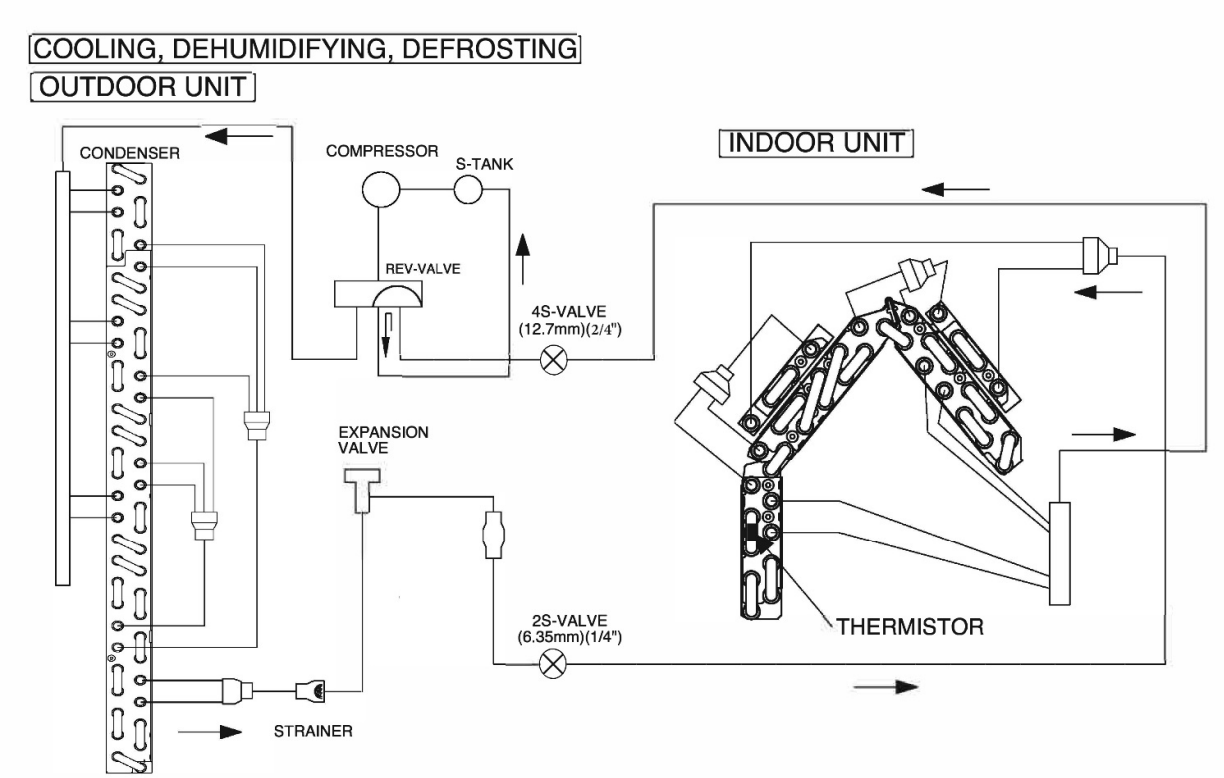

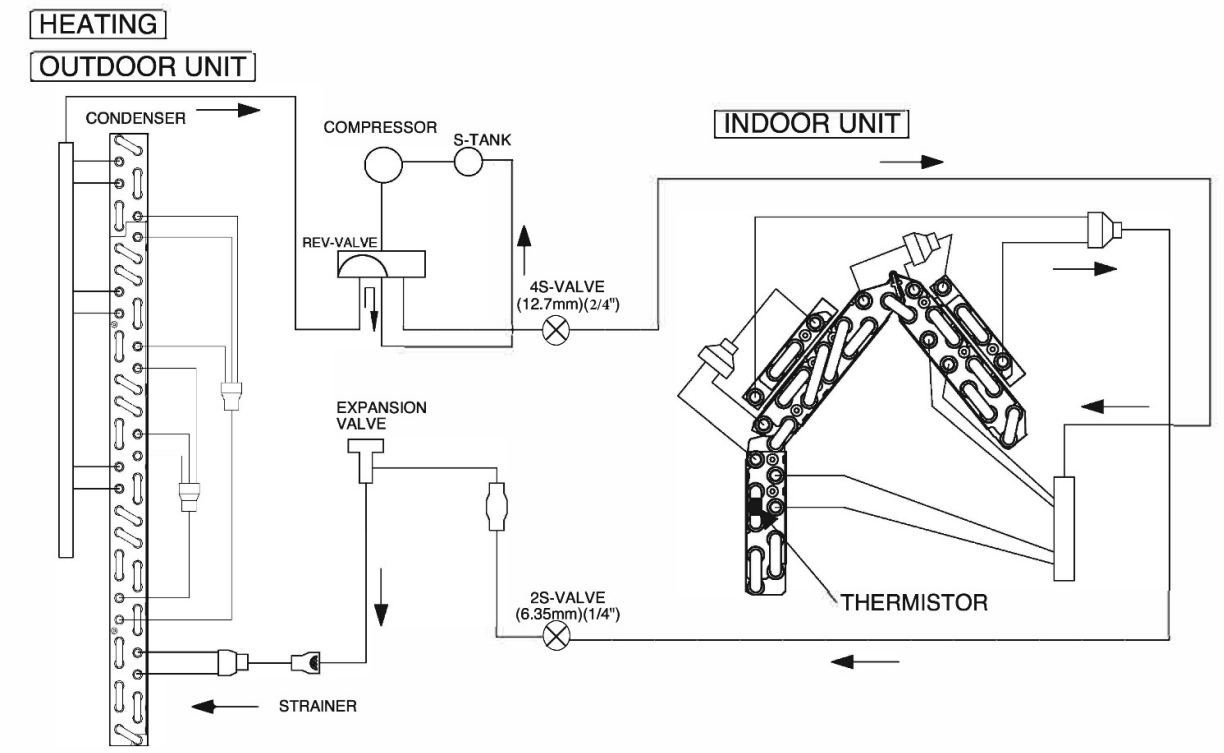

8.2. CEILING CASSETTE: RAI-25RPE, RAI-35RPE

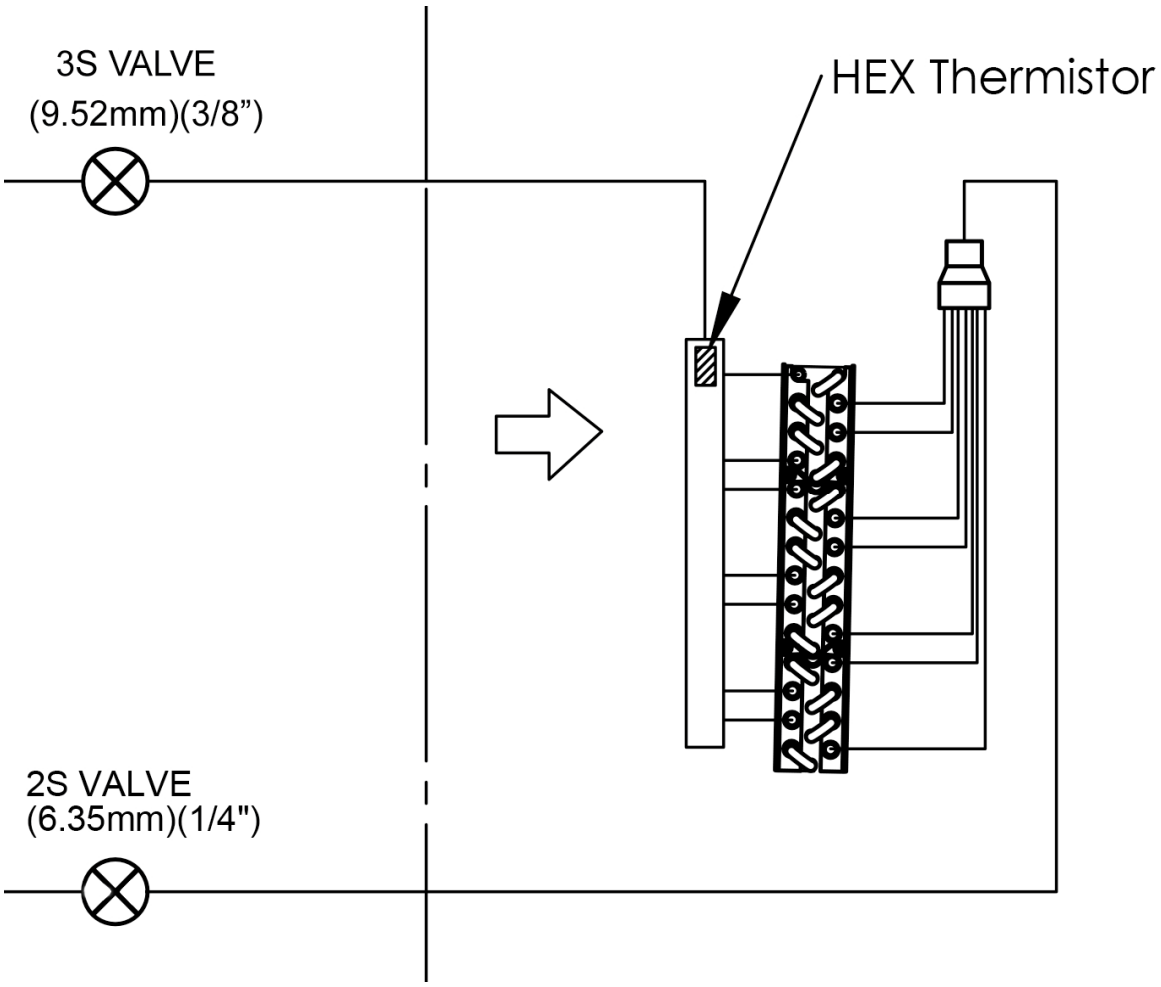

8.3. CEILING CASSETTE: RAI-50RPE/RAC-50NPE, RAI-60RPE/RAC-60NPE

COOLING, DEHUMIDIFYING, DEFROSTING

OUTDOOR UNIT

INDOOR UNIT

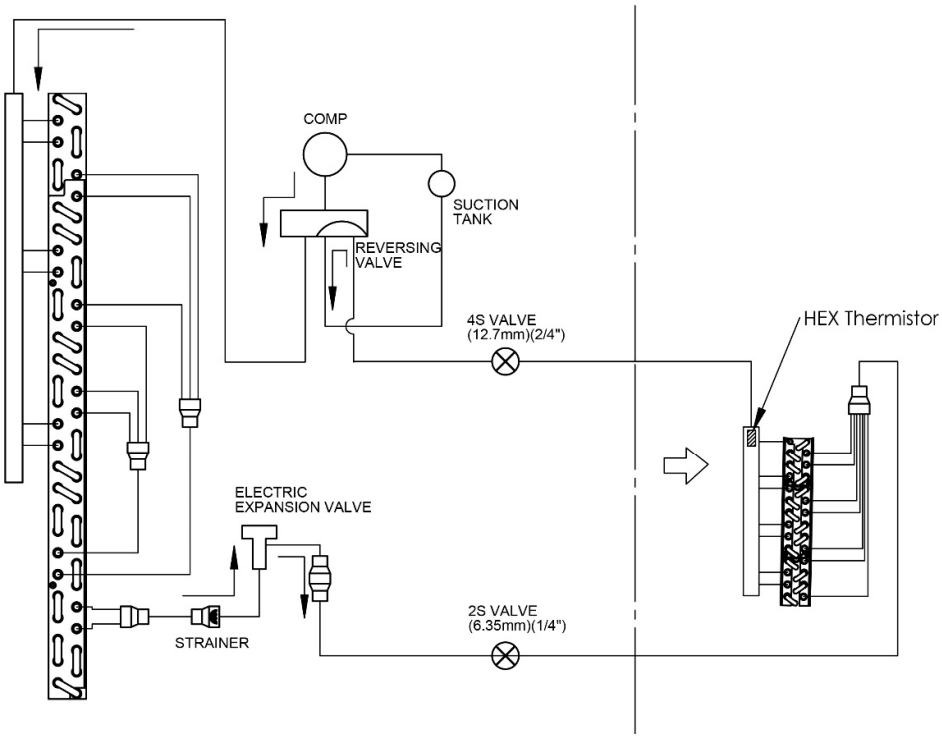

HEATING

OUTDOOR UNIT

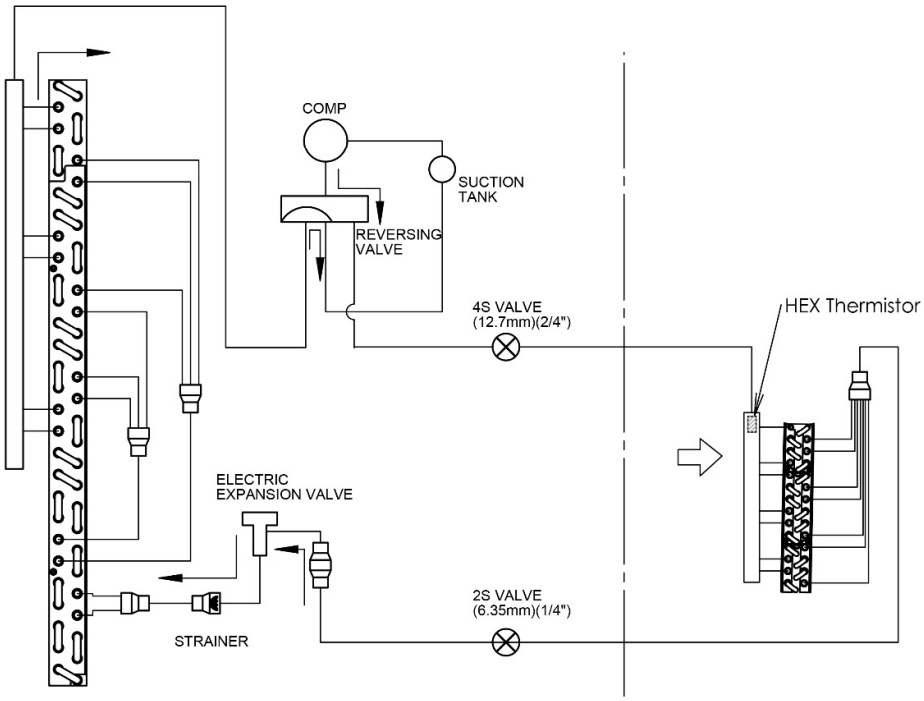

8.4. RAD-25RPE, RAD-35RPE

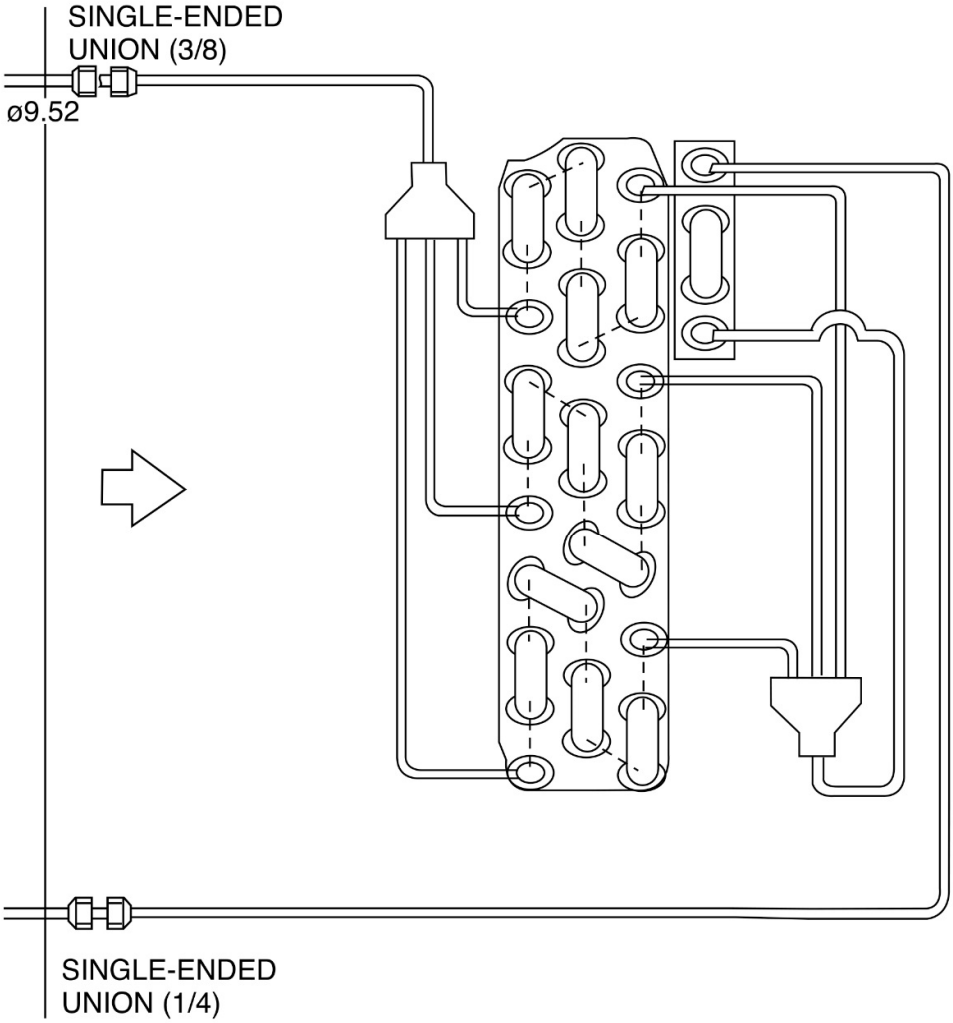

8.5. RAD-50RPE/RAC-50NPE, RAD-60RPE/RAC-60NPE

COOLING, DEHUMIDIFYING, DEFROSTING

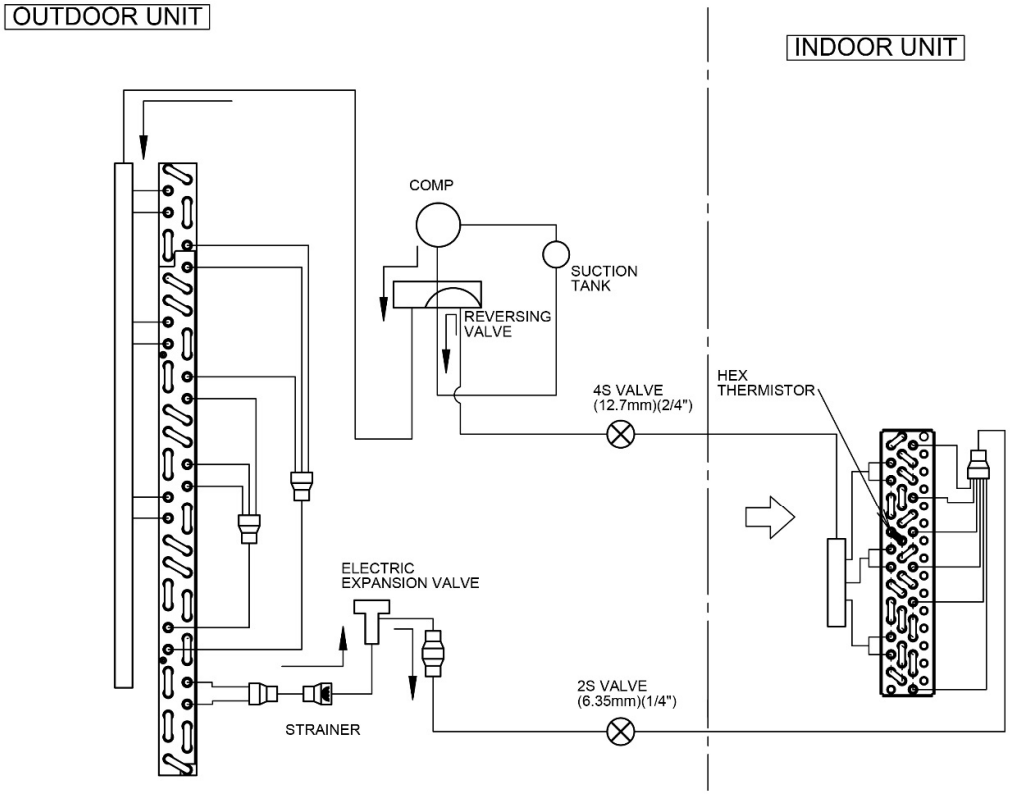

HEATING

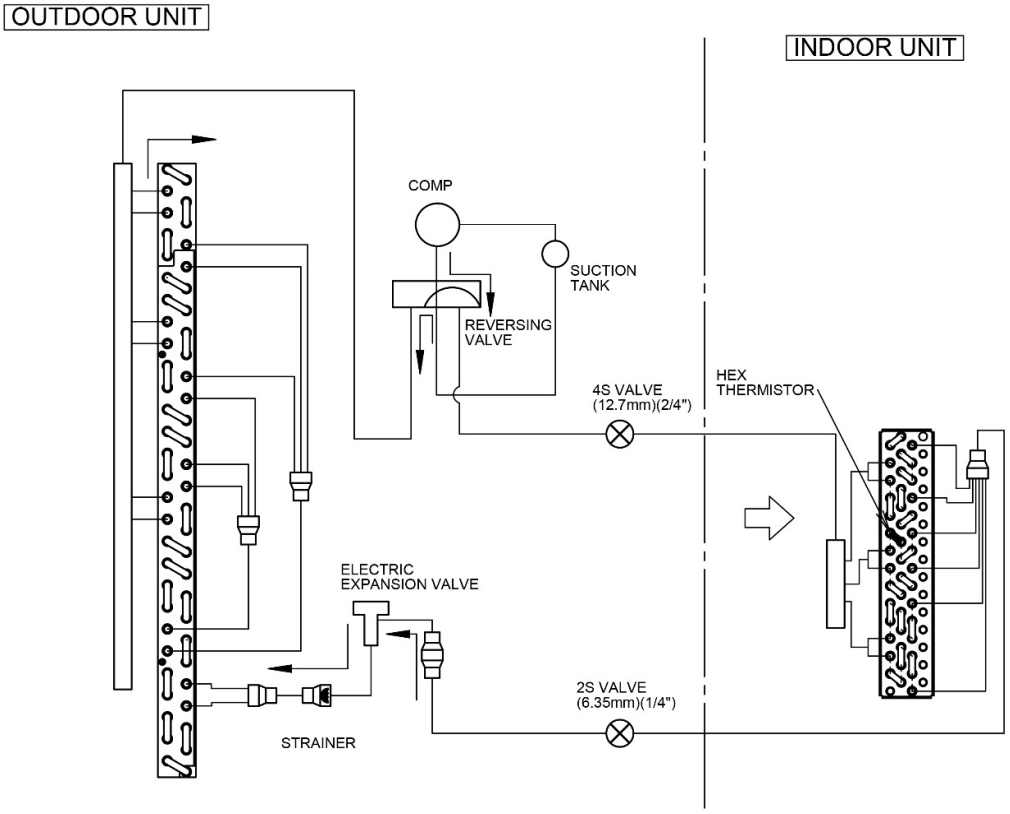

8.6. OUTDOOR: RAC-25NPE, RAC-35NPE

COOLING, DEHUMIDIFYING, DEFROSTING

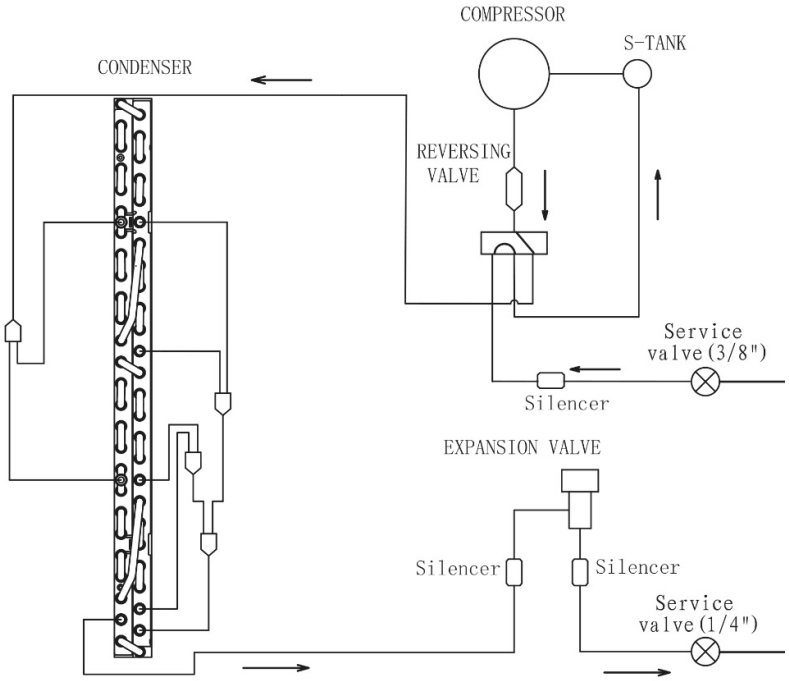

HEATING

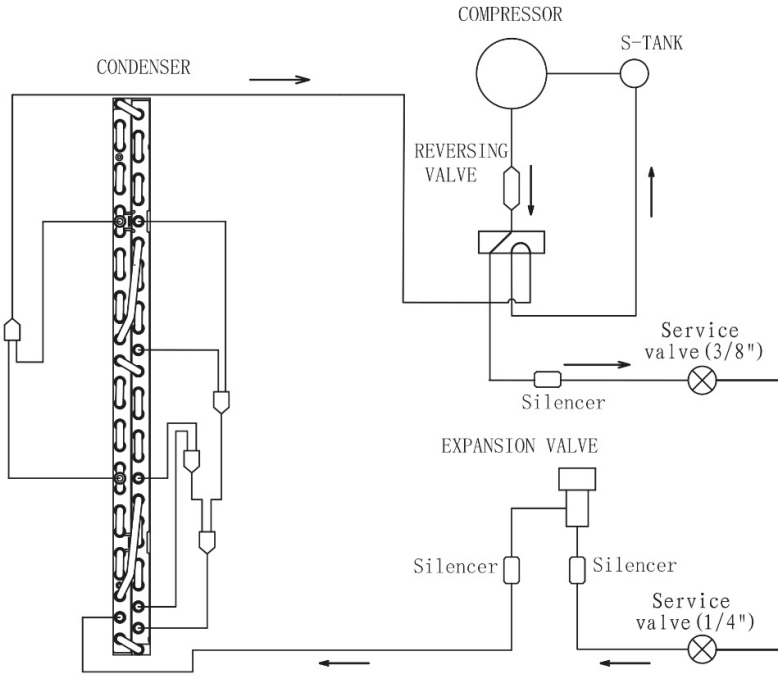

9 OPTION LIST

9.1. WIRELESS REMOTE CONTROL FUNCTION SPX-RCKA1/RCKA2/RCKA3

REMOTE CONTROLLER TYPE

SPX-RCKA1 RAR-6N5	SPX-RCKA2 RAR-6N1	SPX-RCKA3 RAR-6N2
RAD-25RPE RAD-35RPE RAD-50RPE RAD-60RPE	RAK-50RPE1 RAK-60RPE	RAI-25RPE RAi-35RPE RAI-50RPE RAI-60RPE

BUTTONS	FUNCTION
MODE	**MODE Selector** Use this button to select the operationg mode. Every time you press this button, the mode will change from (AUTO) → (HEAT) → (DEHUMIDIFY) → (COOL) and → (FAN) cyclically.
FAN	**FAN SPEED Selector Button** This determines the fan speed. Every time you press this button, the airflow rate will change from (AUTO) → (HIGH) → (MED) → (LOW) → (SILENT) (This button allows selection of optimal or preferred fan speed for each operation mode).
	START/STOP button Press this button to start operation. Press it again to stop operation.
ECO	**ECO button** Use this button to set the ECO mode.
	POWERFUL button Use this button to set the POWERFUL mode.
	SILENT button Use this button to set the SILENT mode.
	INFO button 1) Press this button to display temperature for 10 seconds. 2) Press this button to check monthly power consumption. 3) Press this button to recieve the current calendar and clock.
	ECO SLEEP TIMER button

	Use this button to set the ECO sleep timer.
	AUTO SWING (Vertical) button Controls the angle of the horizontal air deflector.
	AUTO SWING (Horizontal) button Controls the angle of the vertical air deflector.
10°C	**LEAVE HOME button** Prevent the room temperature from falling too much by setting temperature 10°C~16°C when no one is at home.
	ONE TOUCH CLEAN button Drying indoor heat exchanger after cooling operation to prevent mildew.
WEEKLY TIMER buttons	
OFF TIMER ON	**ON/OFF TIMER button** The device will turn on (off) and off (on) at the designated time.
TIME	**TIME button** Press the button to set starting time of the program
OK	**OK button** Press the button to save the program. The button shall be pressed everytime after finishing a program setting.
DELETE	**DELETE button** 1) Press the button to delete the selected program. 2) Press the button for about 10 seconds by directing the remote controller towards the indoor unit while Mode A or B display blinks, programs for Mode A or B will be deleted both from the indoor unit and the remote controller after the beep sound from the indoor unit.
Mon-Sun	**DAY button** Select the desired day of the week.
1 – 6	**PROGRAM NO. button** Press this button to select a program number.
CANCEL	**CANCEL** 1) Press the button to cancel the current setting process on the screen. 2) Press the button by directing the remote controller towards the indoor unit, hen weekly timer setting will be canceled from indoor unit after the beep sound from the indoor unit. The program setting remains in the remote controller.
SEND	**SEND button** Press the button for about 3 seconds by directing the remote controller towards the indoor unit after finishing the program setting. Timer lamp on the indoor unit will blink rapidly and after the beep soung from indoor unit, TIMER lamp will light up.
CLOCK	**CLOCK button** Press the button to set calendar and clock.
WEEKLY A/B	**WEEKLY TIMER MODE button** 1) Select Mode A or Mode B. 2 modes can be set and stored as a weekly timer. 2) By pressing the button longer than 3 seconds, program setting screen will appear.

9.1.1. SHIFT VALUE

1. Press and hold (START/STOP) button and TIMER ON (ON) button.
2. Press RESET [RESET] button on the same time. Release RESET [RESET] button only, then release (START/STOP) and TIMER ON (ON) button once Screen 1 appears.

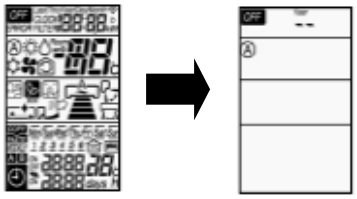

Screen 1 Screen 2

3. Press the MODE (MODE) button to display (FAN) fan mode (Screen 3).

Screen 3

4. Press (START/STOP) and Screen 4 appear.

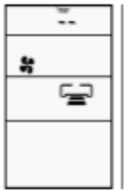

Screen 4

5. Select FAN (FAN SPEED) button to choose Heating Shift or Cooling Shift Mode (Screen 5).

By setting fan speed to HIGH or MED , it will go to Cooling Shift mode.
By setting fan speed to LOW or SILENT , it will go to Heating Shift mode.

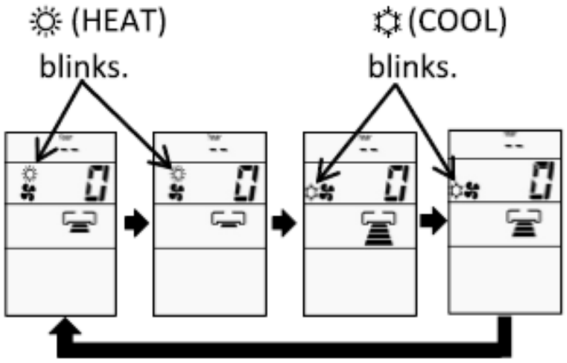

Screen 5

6. Press the Temperature button (or) to adjust the shift value.

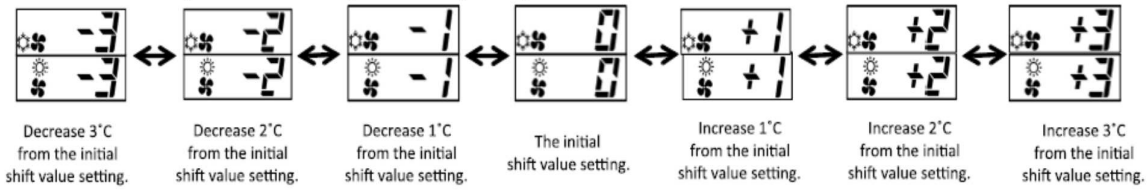

NOTE:
1. There are total of 7 shift values ranging from -3 to 3.
2. The displayed shift value, (HEAT) and (COOL) symbol on the remote controller display will be disappear after 10 seconds
3. The changed shift value will remain unchanged after turned off the power.
4. If “0” is displayed on the remote controller display, it indicates the shift value is now at the initial setting.

9.1.2. OPERATION LOCK

1. HEATING MODE

a) Press and hold ECO (ECO) and POWERFUL (POWERFUL) buttons, press RESET (RESET) button on the same time. Release RESET (RESET) button only when Screen 1 appear, then release ECO (ECO) button and POWERFUL (POWERFUL) button.

Screen 1

b) Wait until only Screen 2 appear.

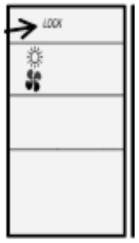

Screen 2

c) The heating mode operation is locked.

d) To unlock HEATING mode, repeat step (a). After all operations mode symbols displayed for 10 seconds, the operation mode symbol before cancellation will be display. The heating mode operation is unlocked.

2. COOLING AND DEHUMIDIFYING MODE

a) Press and hold ECO (ECO) and SILENT (SILENT) buttons for at least 5 seconds when the remote controller is OFF.

b) Wait until only and displayed on the screen. The cooling and dehumidifying modes operation is locked.

c) To unlock HEATING mode, repeat step (a). After all operations mode symbols displayed for 10 seconds, the operation mode symbol before cancellation will be display. The cooling and dehumidifying mode operation is unlocked.

9.1.3. SETTING THE PREVENTION OF MUTUAL INTERFERENCE

1. Please ensure the other indoor unit is OFF.
2. Press [1-6] (PROGRAM NO.) button, [TIMER ON] (ON TIMER) button and [RESET] (RESET) button simultaneously. The remote controller will display Screen 1 and followed by Screen 2. The indoor unit beeps to indicate that it has just received the signal from remote controller.

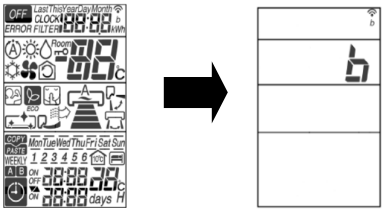

Screen 1 Screen 2

NOTE:
If indoor unit still not receive the correct signal from the correct remote controller, setting shall be made again. By setting again for the 2nd time, the signal address will change from B to A, then repeat again for the 3rd time.

9.1.4. INTERMITTENT FAN SPEED SETTING

The intermittent fan control during thermo off in Heating Mode can be changed by the remote controller.
(This procedure should be done only by service personnel.)
It is possible to select from 3 patterns.

PROCEDURE

1. Press [START/STOP] button, [Mon-Sun] button and press [RESET] button simultaneously. Release [RESET] button only and make sure that all marks on the remote controller display are indicated, then release [START/STOP] button and [Mon-Sun] button. Remote controller now enters "Intermittent Fan Control Change Mode".

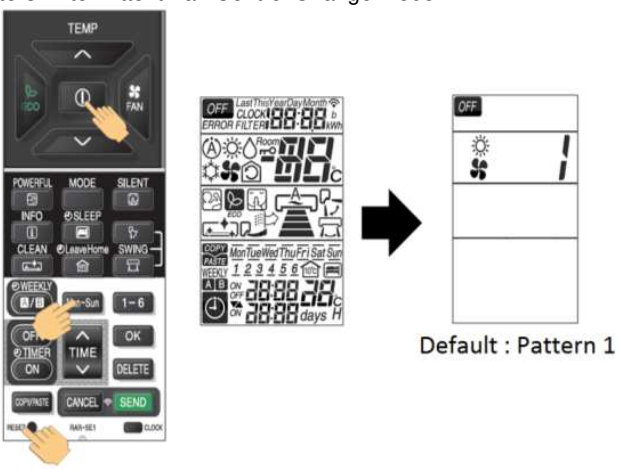

2. Press [ROOM TEMPERATURE setting] [∧(UP)]/[V(DOWN)] buttons.
(The intermittent pattern changed with indoor unit beep sound.)

Transmission sign lights up with beep from indoor unit simultaneously.

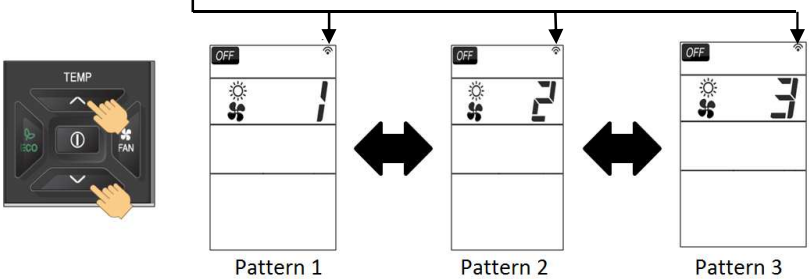

	Pattern 1	Pattern 2	Pattern 3
Single Model	Continuous	30sec ON / 210sec OFF repeatedly	50sec ON / 190sec OFF repeatedly
Multi Model	30sec ON / 210sec OFF repeatedly	50sec ON / 190sec OFF repeatedly	Continuous

NOTE :
(1) The indication of the selected intermittent pattern will disappear after 10 seconds.
(2) The selected intermittent pattern will remain unchanged after the unit is turned off.

9.1.5. FAN SPEED SETTING IN THERMO OFF IN COOLING

The fan speed in Cooling Mode during thermo off can be changed by the remote controller.
(This procedure shall be implemented strictly by service personnel only.)
It is possible to return it to the default setting.

PROCEDURE

Press POWERFUL [POWERFUL] button and TIME [TIME ∧(UP)] button simultaneously for about 5 seconds when the remote controller is OFF.

Transmission sign lights up with beep from indoor unit simultaneously.

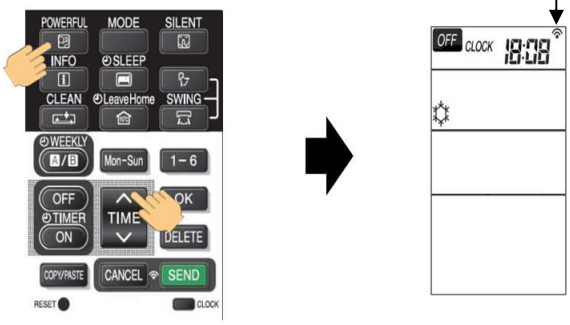

Beep sound pattern : 1) Default setting : Short beep
2) Changed setting : Double beep

	Fan speed during thermo off
Default Setting	Ultra low
Changed Setting	Set fan speed (When auto fan speed is set, the fan speed is low)

NOTE :
(1) The selected fan speed will remain unchanged after the unit is turned off.
(2) If Timer reservation has been set, it will be canceled.
(3) During time setting and timer setting, this operation cannot be set.

9.1.6. ERROR CODE INFORMATION

1. In case failure occurs to the air conditioner, by pressing INFO (INFO) button, an error code will be displayed.
2. Direct the remote controller towards the receiver of indoor unit (within 2 meters in front of indoor unit) and press INFO (INFO) button.
3. Wait for 2 seconds for signal transmission and the error code will be displayed.

	TIMER LAMP BLINKING	LED301 BLINKING	CODE	MEANING
INDOOR	-	-	000 00	Normal
	1 time		001 00	Refrigerant cycle fault
	2 times	-	-	Outdoor unit is under forced operation
	3 times	9 times	003 00	Communication error between indoor and outdoor units
	9 times	-	009 00	Indoor thermistor
	10 times	-	010 00	Abnormal rotating numbers
	13 times	-	013 00	IC401 data reading error
OUTDOOR	4 times	2 times	002 01	Peak current cut
	4 times	3 times	003 01	Compressor abnormal low speed rotation
	4 times	4 times	004 01	Compressor switching failure
	4 times	5 times	005 01	Overload lower limit cut
	4 times	6 times	006 01	OH thermistor temperature rise
	4 times	7 times	007 01	Abnormal outdoor thermistor
	4 times	8 times	008 01	Acceleration defective
	4 times	9 times	009 01	Communication error
	4 times	10 times	010 01	Abnormal power source
	4 times	11 times	011 01	Fan stop for strong wind
	4 times	12 times	012 01	Fan motor fault
	4 times	13 times	013 01	EEPROM reading error
	4 times	14 times	014 01	Active converter defective
	4 times	15 times	015 01	Abnormal PWB circuit

	TIMER LAMP BLINKING	LD301 Lit LD302 BLINKING	CODE	MEANING
OUTDOOR	4 times	1 times	071 01	Overheat thermostat
	4 times	2 times	072 01	Defrost thermostat
	4 times	3 times	073 01	Outdoor temperature thermostat
	4 times	4 times	074 01	Narrow pipe thermostat (indoor 1)
	4 times	5 times	075 01	Wide pipe thermostat (indoor 1)
	4 times	6 times	076 01	Narrow pipe thermostat (indoor 2)
	4 times	7 times	077 01	Wide pipe thermostat (indoor 2)
	4 times	8 times	078 01	Narrow pipe thermostat (indoor 3)
	4 times	9 times	079 01	Wide pipe thermostat (indoor 3)
	4 times	10 times	080 01	Narrow pipe thermostat (indoor 4)
	4 times	11 times	081 01	Wide pipe thermostat (indoor 4)
	4 times	12 times	082 01	Narrow pipe thermostat (indoor 5)
	4 times	13 times	083 01	Wide pipe thermostat (indoor 5)

9.1.7. ADDITIONAL FUNCTION VIA DIP-SWITCH SETTINGS

A new DIP Switch is available on the PWBs of the indoor unit that provide additional functions via the settings on the switches.

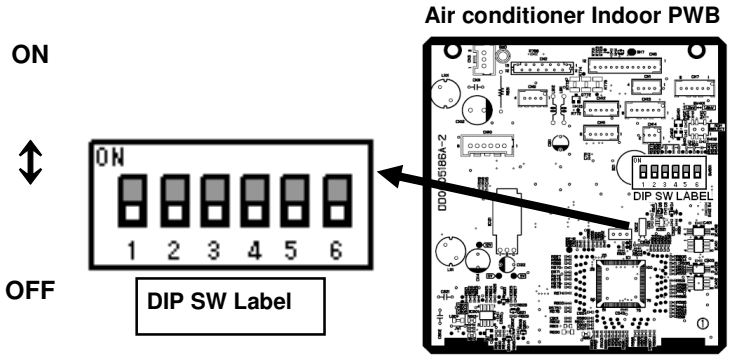

Pin No.	Function	Switch Position / Setting					
1	AUTO RESTART function	OFF	Enable	ON	Disable		
2	DRY CONTACT function	OFF	Disable	ON	Enable		
3	DRY CONTACT Logic Select	OFF	HI Input Active	ON	LO Input Active		
4	HEATING / COOLING ONLY MODE SELECT	OFF	NORMAL (HEAT AND COOL)	OFF	HEATING ONLY	ON	COOLING ONLY
5		OFF		ON		OFF	
6	REMOCON ID SELECT ❖1	OFF	SELECT ID A	ON	SELECT ID B		

NOTE:

❖1 The setting of pin no. 6 is disabled for this model. Please refer to **9.1.3. SETTING THE PREVENTION OF MUTUAL INTERFERENCE**.

9.1.8. AUTO RESTART FUNCTION

The AUTO RESTART function can be enabled or disabled by setting Pin No. 1 on the DIP SWITCH above to the ON or OFF position accordingly.

9.1.9. HEATING/COOLING ONLY MODE SELECTION

When this function is enabled, the operation mode could be locked to either Heating Only (Heating or Fan) or Cooling Only (Cooling, Fan or Dehumidifying) by setting the Pin No. 4 and 5 accordingly.

LOCKED MODE	REMARKS
HEATING ONLY	Unit will not enter into Cooling mode although cooling mode is selected using the remote controller.
COOLING ONLY	Unit will not enter into Heating mode although heating mode is selected using the remote controller.

9.2. WIRED REMOTE CONTROL SPX-RCDA AND SPX-RCDB

This controls the operation function and timer setting of the room air conditioner.

RAR-5G1 (SPX-RCDA)	RAR-5G2 (SPX-RCDB)	
RAD-25RPE RAD-35RPE RAD-50RPE RAD-60RPE	RAK-50RPE1 RAK-60RPE	RAI-25RPE RAI-35RPE RAI-50RPE RAI-60RPE

BUTTONS	FUNCTION
	MODE Selector Use this button to select the operationg mode. Every time you press this button, the mode will change from (AUTO) → (HEAT) → (DEHUMIDIFY) → (COOL) and → (FAN) cyclically.
FAN	**FAN SPEED Selector Button** This determines the fan speed. Every time you press this button, the airflow rate will change from (AUTO) → (HIGH) → (MED) → (LOW) → (SILENT) (This button allows selection of optimal or preferred fan speed for each operation mode).
	ON/OFF button Press this button to start operation. Press it again to stop operation.
	SLEEP button Use this button to set the SLEEP timer.
SET	**SET button** Timer setting reservation.
OFF	**OFF button** Select the turn OFF timer.
ON	**ON button** Select the turn ON timer.
CANCEL	**CANCEL button** Cancel timer reservation.
	AUTO SWING (Vertical) button Controls the angle of the horizontal air deflector.
	ROOM TEMPERATURE setting button Value will change quicke when keep pressing.

9.2.1. SHIFT VALUE

1. Press and hold (ON/OFF) button and (ON TIMER) button at the same time while giving a single press on the RESET button until remote controller now enter 'Shift value change mode'.
2. Press (ON/OFF) button so that the display indicates FAN (FAN) speed.
3. Select FAN (FAN SPEED) button to choose Heating Shift or Cooling Shift Mode.

   By setting fan speed to HIGH or MED , it will go to Cooling Shift mode.
   By setting fan speed to LOW or SILENT , it will go to Heating Shift mode.

4. Press (ROOM TEMPERATURE) button to change the shift value (-3°C ~ 0 ~ 3°C).
5. Press (ON/OFF) button to end 'Shift value setting mode'.

NOTE:
1. There are total of 7 shift values ranging from -3 to 3.
2. The changed shift value will remain unchanged after turned off the power.

9.2.2. ERROR CODE INFORMATION

1. In case failure occurs to the air conditioner, the error code will constantly appear on the wired remote controller display.

	TIMER LAMP BLINKING	LD301 BLINKING	CODE	MEANING
INDOOR	-	-	-	Normal
	1 time		01 O	Refrigerant cycle fault
	2 times	-	-	Outdoor unit is under forced operation
	3 times	9 times	03 O	Communication error between indoor and outdoor units
	9 times	-	09 O	Indoor thermistor
	10 times	-	10 O	Abnormal rotating numbers
	13 times	-	13 O	IC401 data reading error
OUTDOOR	4 times	2 times	02 I	Peak current cut
	4 times	3 times	03 I	Compressor abnormal low speed rotation
	4 times	4 times	04 I	Compressor switching failure
	4 times	5 times	05 I	Overload lower limit cut

	TIMER LAMP BLINKING	LD301 BLINKING	CODE	MEANING
OUTDOOR	4 times	6 times	06 I	OH thermistor temperature rise
	4 times	7 times	07 I	Abnormal outdoor thermistor
	4 times	8 times	08 I	Accelaration defective
	4 times	9 times	09 I	Communication error
	4 times	10 times	10 I	Abnormal power source
	4 times	11 times	11 I	Fan stop for strong wind
	4 times	12 times	12 I	Fan motor fault
	4 times	13 times	13 I	EEPROM reading error
	4 times	14 times	14 I	Active converter defective
	4 times	15 times	15 I	Abnormal PWB circuit
		LD301 Lit LD302 BLINKING		
	4 times	1 times	71 I	Overheat thermostat
	4 times	2 times	72 I	Defrost thermostat

	TIMER LAMP BLINKING	LD301 Lit LD302 BLINKING	CODE	MEANING
OUTDOOR	4 times	3 times	73 I	Outdoor temperature thermostat
	4 times	4 times	74 I	Narrow pipe thermostat (indoor 1)
	4 times	5 times	75 I	Wide pipe thermostat (indoor 1)
	4 times	6 times	76 I	Narrow pipe thermostat (indoor 2)
	4 times	7 times	77 I	Wide pipe thermostat (indoor 2)
	4 times	8 times	78 I	Narrow pipe thermostat (indoor 3)
	4 times	9 times	79 I	Wide pipe thermostat (indoor 3)
	4 times	10 times	80 I	Narrow pipe thermostat (indoor 4)
	4 times	11 times	81 I	Wide pipe thermostat (indoor 4)
	4 times	12 times	82 I	Narrow pipe thermostat (indoor 5)
	4 times	13 times	83 I	Wide pipe thermostat (indoor 5)

9.3. WIRED FULL DOT REMOTE – SPX-WKT3

9.3.1. NAMES AND FUNCTIONS OF REMOTE CONTROLLER

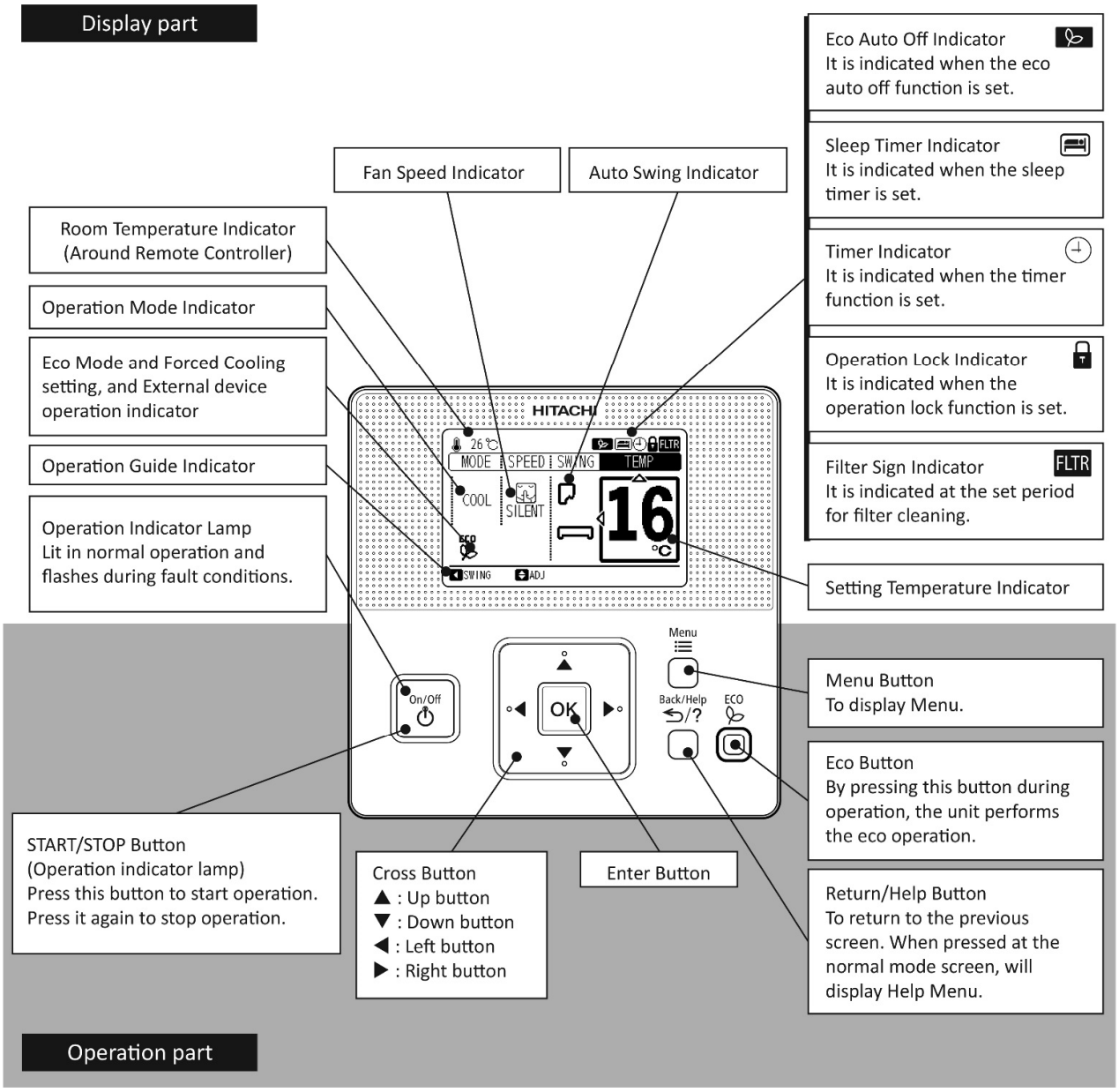

9.3.2. SERVICE MENU

Various setting functions are displayed in the service menu. This procedure shall be implemented strictly by service personnel only. Refer to the following sections for each function.

NOTE

⊠ : Unable to set

If the function with " ⊠ " is selected from the menu, "Setting Disabled" will be displayed on the lower screen.

1 Press and hold Menu and Back/Help simultaneously for at least 3 seconds during the normal mode.
The service menu will be displayed.

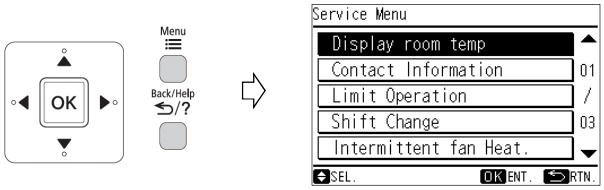

2 Select the "Service Menu" function by pressing "△" or "▽" and press "OK".
(" ⊠ " will be displayed if the function is not available.)

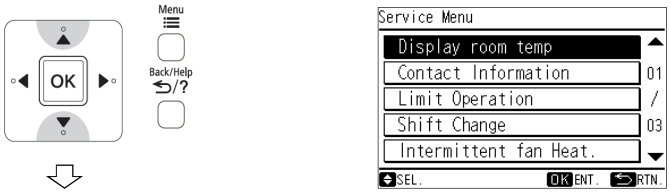

Page 1/3

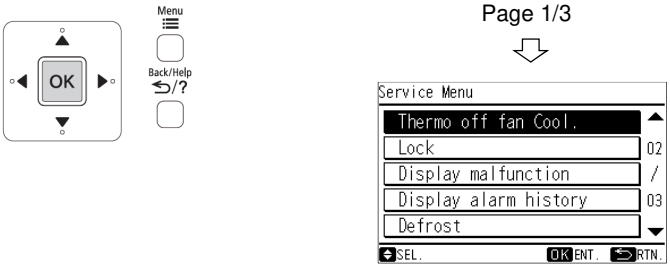

Page 2/3

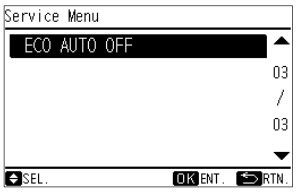

Page 3/3

3 Press " Back/Help "(return/help) to return to the normal mode.

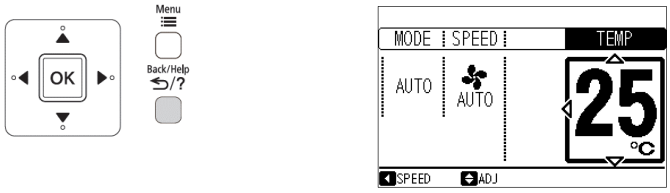

9.3.3. SHIFT VALUE CHANGE

The shift value setting temperature for cooling and heating mode operation can be changed.

1 Select "Shift Change" from the service menu and press "OK". The shift change setting will be displayed.

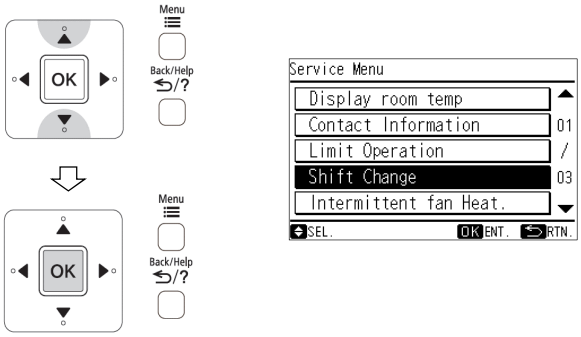

2 Press "△" or "▽" to select the operation mode.
("COOL" or "HEAT")

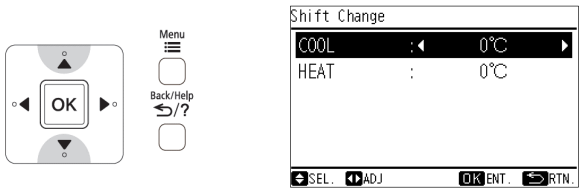

3 By pressing "△ "or "▽", the shift value will be changed as below.
"....+3℃ <--> -3℃ <--> -2℃ <--> -1℃ <--> 0℃ <--> +1℃ <--> +2℃ <--> +3℃ <--> -3℃..."

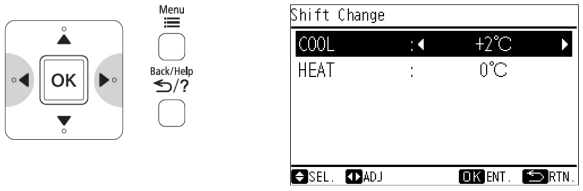

4 Press "OK" to finish the shift value setting. The confirmation screen will be displayed.

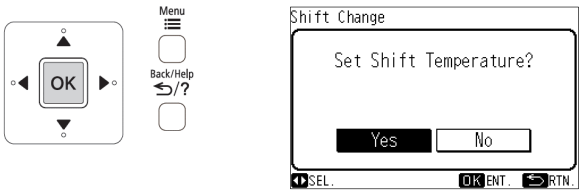

5 Select "Yes" by pressing "△ "or "▽" and press "OK". The setting will be confirmed and the screen will return to the service menu.

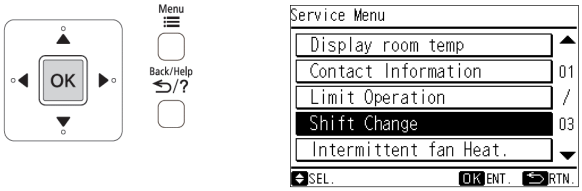

6 Press " Back/Help ⮌/? "(return/help) to return to the normal mode.

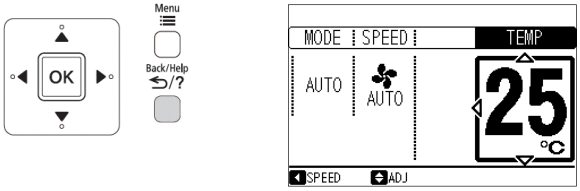

NOTE

- When the setting is done, fan speed will be changed to “silent”.
- This setting cannot use during operation.
- The “shift value change” setting will remain unchanged after the unit is turned off.

9.3.4. OPERATION LOCK

This function is used to lock the operation mode from the remote controller.
The remote controller can be set to fix the "Heating" mode (including "Fan"), "Cooling" mode and "Dehumidifying" mode (including "Fan") operations.

1 When unit is OFF, select "Lock" from the service menu and press "OK".
The screen of "Mode Lock" selection will be displayed.

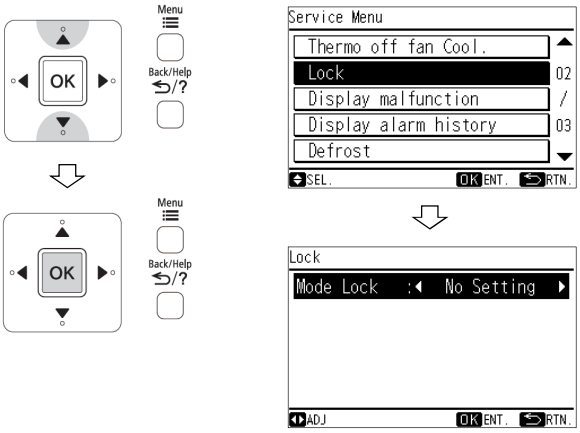

2 By repeatedly pressing "△ "or "▽", the indication is changed in order of "No Setting" <---> "COOL" <---> "HEAT"
Select the function target and press "OK".
The confirmation screen will be displayed.

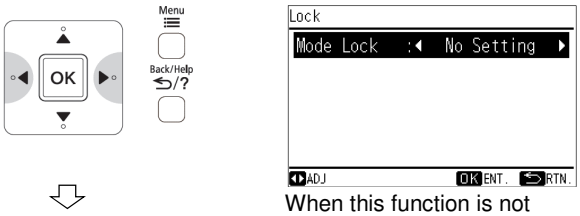

When this function is not used

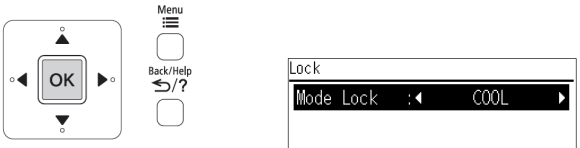

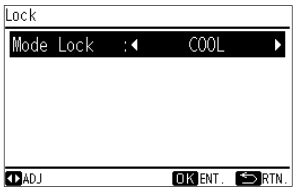

When "Cooling" mode lock is selected

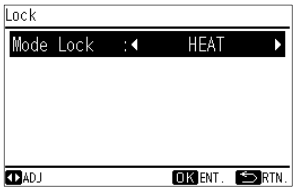

When "Heating" mode lock is selected

3 Select "Yes" by pressing "△ "or "▽" and press "OK".
The setting will be confirmed and the screen will return to the service menu.

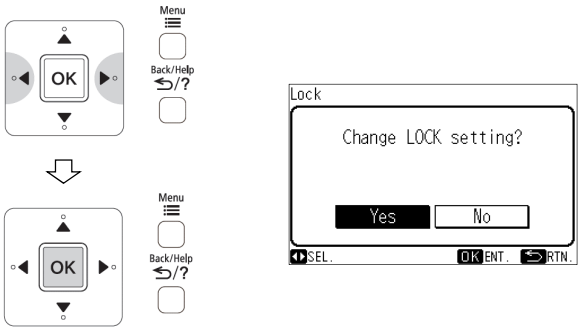

4 Press " Back/Help ⮌/? " to return to the normal mode.

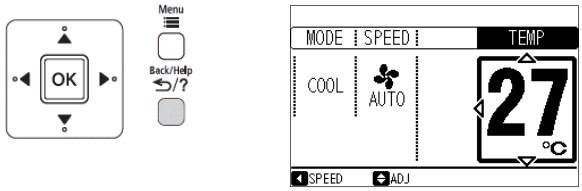

Example: Select "Cooling" mode lock

NOTE:
The operation lock setting will remain unchanged after the unit is turned off.

9.3.5. INTERMITTENT FAN CONTROL

The intermittent fan control during thermo off in Heating mode can be changed

1 Select "Intermittent fan Heat." from the service menu and press "OK".
The intermittent fan control setting will be displayed.

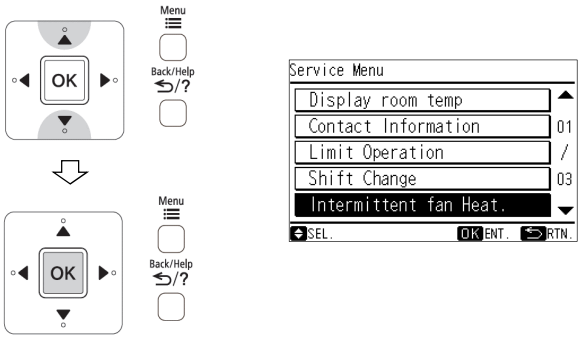

2 By pressing "△ "or "▽", the "Control Type" will be changed as below.
".... No.1 <---> No.2 <---> No.3 <---> No.1 ..."

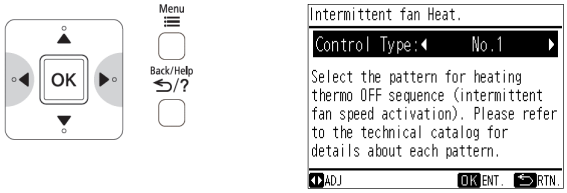

	Single model	Multi model
No 1	Continuous	30 sec ON / 210 sec OFF repeatedly
No 2	30 sec ON / 210 sec OFF repeatedly	50 sec ON / 190 sec OFF repeatedly
No 3	50 sec ON / 190 sec OFF repeatedly	Continuous

3 Press "OK" to finish the intermittent fan control setting.
The confirmation screen will be displayed.

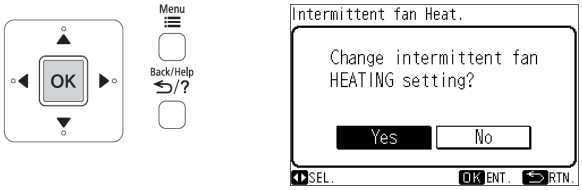

4 Select "Yes" by pressing "△ "or "▽" and press "OK".
The setting will be confirmed and the screen will return to the service menu.

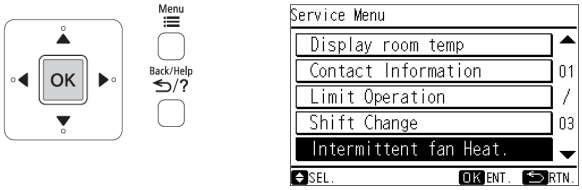

5 Press " Back/Help ⮌/? " to return to the normal mode.

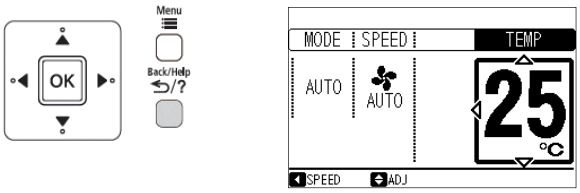

NOTE
- This setting cannot use during operation.
- The intermittent fan control setting will remain unchanged after the unit is turned off.

9.3.6. FAN SPEED DURING THERMO OFF

The fan speed during thermo off in Cooling mode can be changed.

1 Select "Thermo off fan Cool." from the service menu and press "OK".
The fan speed during themo off setting will be displayed.

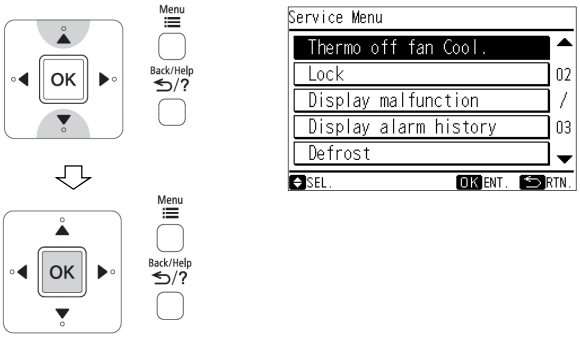

2 By pressing "△ "or "▽", the "Control Type" will be changed as below.

"Default" <---> "Changed"

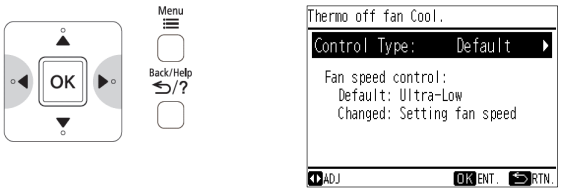

	Fan speed during thermo off
Default	Ultra low
Changed	Set fan speed (When auto fan is set, the fan speed is low)

3 Select "Yes" by pressing "△ "or "▽" and press "OK".
The setting will be confirmed and the screen will return to the service menu.

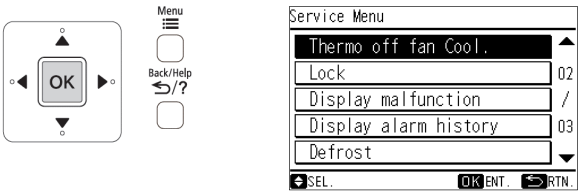

4 Press " Back/Help ⮌/? " to return to the normal mode.

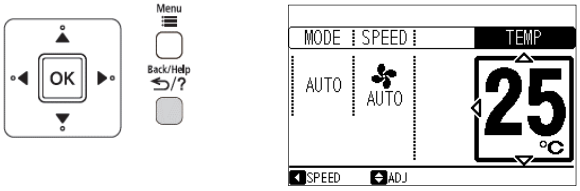

NOTE:

- This setting cannot use during operation.
- The fan speed during thermo off setting will remain unchanged after the unit is turned off.

9.4. H-LINK ADAPTOR – PSC 6RAD

9.4.1. SAFETY SUMMARY

DANGER:

– *DO NOT pour water into the remote control switch (hereafter called "controller"). This product is equipped with electrical parts. This will cause serious electrical shock.*

WARNING:

– *DO NOT perform installation work and electrical wiring connection by yourself. Contact your distributor or dealer of HITACHI and ask then for installation work and electrical wiring by service person. The specified cable should be used to connect (i) room air conditioner and adaptor, and (ii) controller and adaptor.*

CAUTION:

– *DO NOT install the indoor unit, outdoor unit, controller and cable as such places as:*
  – *where there is oil vapor and dispersion of oil*
  – *where there is sulfuric environment (near the hot springs)*
  – *where there is a flammable gas*
  – *where there is salty environment (near the sea)*

– *DO NOT install the indoor unit, outdoor unit, controller and cable within approximately 3 meters from strong electromagnetic wave radiators, such as medical equipment. In case that the controller is installed in a place where there is electromagnetic wave direct-radiation, shield the controller and cables by covering with the steel box and running the cable through the metal conduit tube.*

– *In case that there is electric noise at the power source for the indoor unit, provide a noise filter.*

9.4.2. INSTALLATION WORK

■ **Before installation**

Check the contents and the number of the accessories in the packing.

Adaptor	**With two 1.8m cables**
1 piece of cover for hiding the covering	**Attached 2 sided tapes** 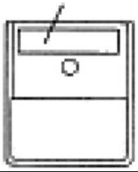
Two-sided tape for attaching to Adaptor	**110x40x3mm**
2 connectors for H-Link connection	
2 tapping screws for attaching to wall	**ϕ3.0 x 10mm**
2 screws for attaching to wooden wall	**ϕ3.1 x 16mm**

1) RAC adaptor can be installed to the wall as well as on the air conditioner itself
2) Install RAC adaptor in the vertical surface as shown below.

Upper side

Mark "⇧ UP"

Wiring outlet

Bottom side

3) Installation procedure
   a) When installing to the wall.
      i) Fix the adaptor with 2 screws. Tapping screw is for metal surface, and other screw is for wooden surface.

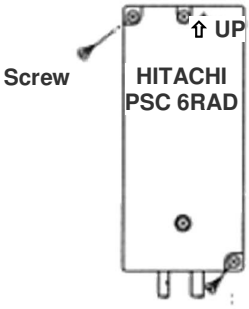

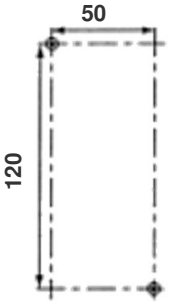

      ii) When using the cover
      It can be installed at the right and left side of room air conditioner. Fix the cover and RAC adaptor with the two-sided tape (accessory).

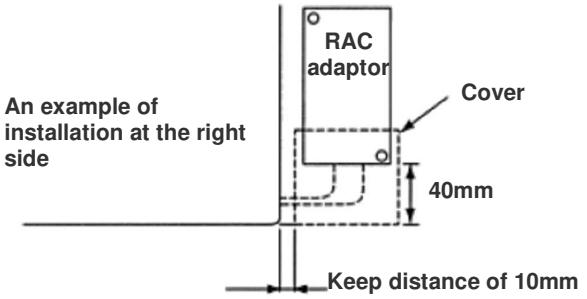

b) When installing on the room air-conditioner
In case that it cannot be installed to the wall due to the space or material problem, install the RAC adaptor with the two-sided tape (accessory) on the room air-conditioner.
   i) Confirm if the piping cover of the unit can be removed when performing the service maintenance, and then fix the RAC adaptor in the side of room air-conditioner with two-sided tape. (Available at the right as well as left side)
   ii) Clean the surface to be installed with a dry cloth.

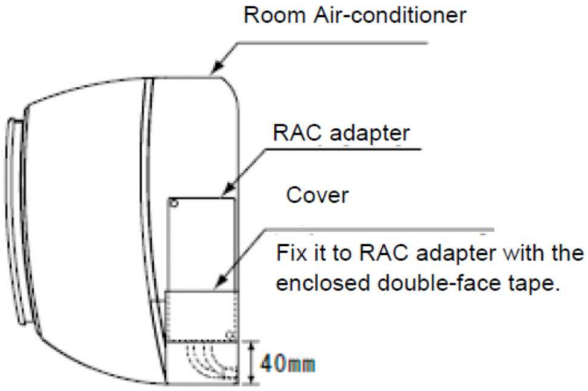

NOTE:

- *Consider the following points since the adhesiveness changes according to the environmental conditions (temperature, humidity etc)*
- *The adhesiveness is decreased when there is humidity or oil.*
- *Warm the adhesive part and installation place of the two-sided tape to avoid the decrease of the adhesiveness in case the ambient temperature is low.*
- *DO NOT touch the adhesive part by fingers nor re-attach it many times. The adhesiveness has decreased and the RAC adaptor may fall off.*
- *DO NOT apply any force within 24 hours after installation.*

9.4.3. ELECTRICAL WIRING

■ System configuration

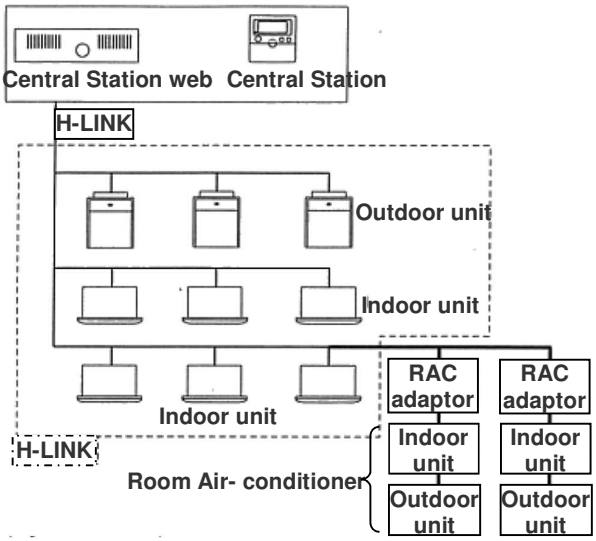

CAUTION:

- *Turn OFF the power supply of the room air-conditioner of the central control device when performing the wiring work*
- *DO NOT run all the H-LINK cable or power supply cable along the other signal cable, or malfunction may occur due to the noise, etc. If it is required to run along the other transmission cable, separate the cable more than 30cm, or run the cable through the metal tube and earth the tube.*
- *Follow local codes and regulations when performing electrical wiring and earth wiring.*
- *Transmissions cable used in H-LINK shall be 2 cores cable (0.7mm^2 to 1.25mm^2 for model: VCTF, VCT, CVV, MVVX, CVVX, VVR, VVF) or 2 cores twisted pair cable (model: KPEV, KPEV-Spec). Total length of cable shall be below 1000mm.*
- *DO NOT use wire with more than 3 cores.*

■ Internal components and Wiring connections

Check the contents and the number of the accessories in the packing.

- Access
  Open the cover by removing the ① and ② screws.

- Wiring Connection
  Connection with Room Air-Conditioner
  i) Remove the front cover of the room air-conditioner and the cover of electrical box.
  ii) The cable attached with the connector of the RAC adaptor shall be connected with the connector of indoor PCB

iii) Install the electrical box cover paying attention not to clamp the cable. Read the installation manual of each room air-conditioner for confirming how to connect and how to assemble the cable of the RAC adaptor.

CAUTION:

– *Disconnect the power plug before performing this work*

– *Turn OFF the break power source in case the power is supplied from the outdoor unit.*

- Connection of Transmission Cable

H-LINK transmission cable connecting to RAC adaptor shall be connected to H-LINK.

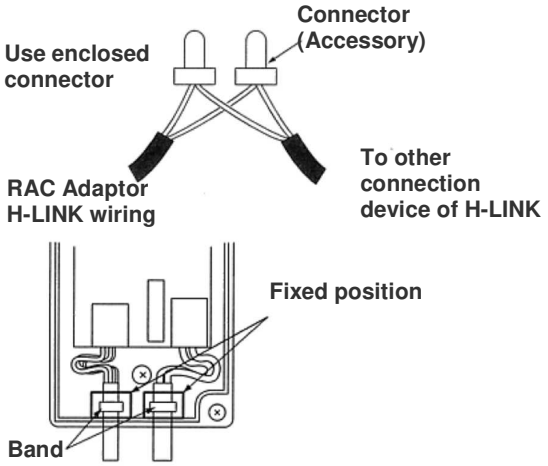

CAUTION:

– *DO NOT connect incorrect wiring. It may cause the failure of the RAC Adaptor. Especially pay attention not to apply high voltage e.g. AC400/230V.*

– *DO NOT perform the wiring work while power to the central station or the RAC Adaptor is still being supplied. It may cause malfunction. Turn OFF devices when performing the wiring work.*

– *The RAC Adaptor side cable should not overload to the connector.*

– *DO NOT clamp the cable when attaching the RAC adaptor cover.*

– *Band should not be loose and in fixed position.*

9.4.4. DIP SWITCH SETTING

1) Switch OFF the power of room air conditioner before setting the DIP switch. If the power is ON, the settings are INVALID.
2) The position of the DIP switch is shown below.

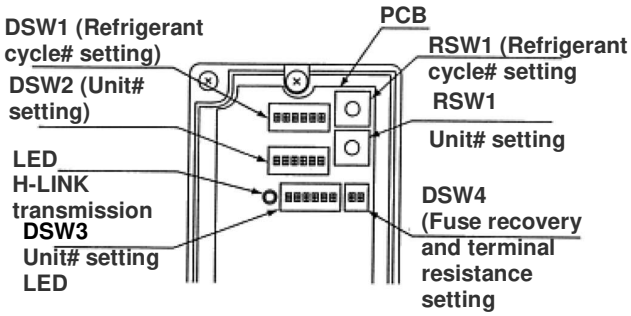

CAUTION:

– *DO NOT turn ON various pins of DSW1 and DSW2*

3) Set the refrigerant cycle# by RSW1 and DSW1

DSW1 (Ten digit)	RSW1 (Last digit)
	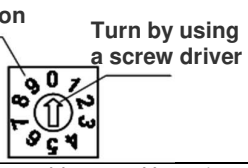
DSW1 and RSW1 are set “0” before shipment. Up to 15 cycles can be set.	
E.g. Setting in Ref No. 5 No. 1 pin is OFF	The position is Set 5

4) Set the unit No. by RSW2 and DSW2

DSW2 (Ten digit)	RSW2 (Last digit)
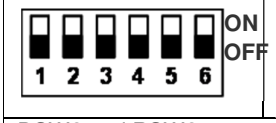	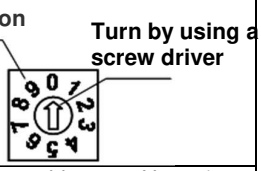
DSW2 and RSW3 are set “0” before shipment. Up to 15 cycles can be set.	
E.g. Setting in Unit No. 15 No. 1 pin is OFF	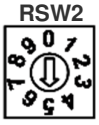 The position is Set 5

5) Slave unit.

In case of setting various RAC adaptors in the same refrigerant cycle, set the RAC adaptor with smallest Unit# as a master unit. In case of setting only one RAC adaptor in a refrigerant system, this adaptor should be a master unit. Set this procedure by DSW3.

Master Unit setting	Setting before shipping (slave unit setting)
	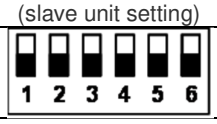

●: Master Unit setting

○: Setting before Shipping (Slave Unit setting)

Indoor Unit#

Refrigerant Unit#

	0	1	2	3	4	5	6	7		
0	●	○	○	○	○					
1			●	○	○					
2				●	○	○	○	○		
3		●								
4										

CAUTION:

– *DO NOT set various main adaptors in the same refrigerant cycle.*

6) Procedure when applying 200V voltage to H-LINK wiring incorrectly.

In case of applying 200V voltage to H-LINK wiring incorrectly, the fuse installed in a transmission circuit on PCB will blow out. In this case, reconnect the wiring correctly and turn ON No. 2 pin of DSW4 on PCB. The transmission circuit can be recovered. (If applying this error again, the transmission circuit can not be recovered)

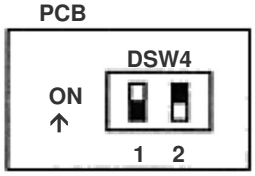

Turn ON No.2 pin of DSW4

7) Terminating resistance is set in whole H-LINK system.
   a) If H-LINK connecting devices like package air-conditioner are connected besides the RAC Adaptor, set the terminating resistance by those connecting devices. The terminating resistance should be set ON in only one position in whole H-LINK system.
   b) In case that H-LINK is connected only by the RAC adaptor, set the terminating resistance by the RAC adaptor. The terminating resistance should be set ON in only one position in whole H-LINK system.

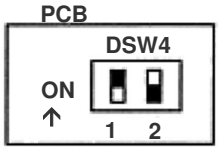

Turn ON No.1 pin of DSW4

9.4.5. TEST RUN

Test run should be performed in the following after finishing the installation, wiring and setting. Refer to the installation manuals enclosed with the control system equipment.

1) Confirmation of RAC Adaptor Connection
   Confirm if the RAC adaptor connection is recognized in the control system equipments. In case that it is not confirmed, check the transmission cable, refrigerant cycle #, indoor unit #, terminal resistance setting etc.
2) Registration
   Confirm if the RAC adaptor connection is recognized.
3) Confirmation of RUN/STOP Operation.
   Confirm if the room air-conditioner operate correctly by RUN/STOP from the central control system equipments. Check also if the room air-conditioner operation changes correctly by each setting.

9.5. DRY CONTACT (SPX-WDC2 AND SPX-WDC3) APPLICATION (USING DIP SWITCH)

The dry contact system enables the operation of the air conditioner indoor unit to be controlled by using external dry contacts (with non voltage) such as card-key controller or window for facilities such as hotels.

Table 1 (Applicable models and related information)

Optional Connecting cord Accessory SPX-WDC#		Model	DIP SW Label	CN#
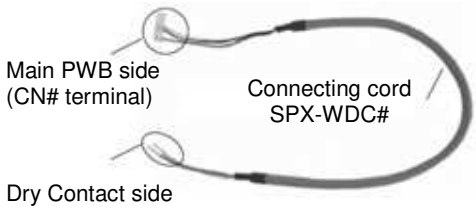	SPX-WDC2	RAI-25/35/50/60RPE	SW501	CN9
		RAD-25/35/50/60RPE	SW501	CN9
	SPX-WDC3	RAK-50RPE1/60RPE	DSW1	CN6

Note:
1) DRY CONTACT function is "Enable" by set pin No. 2 of the DIP SWITCH (refer to table 1 for the label) to ON position.
2) Select the proper setting for DRY CONTACT LOGIC INPUT pin No. 3 on DIP SWITCH (refer to Table 1 for the label)
   i) Set to OFF position (Hi Input) if the type of Dry Contact switch to be used (for the CARD KEY UNIT or Window) is of contact type a (Normally Open Type) as shown in below diagram.
   ii) Set to ON position (Lo Input) if the type of Dry contact switch to be used (for the CARD KEY UNIT or Window) is of contact type b (Normally Close Type) as shown in below diagram.

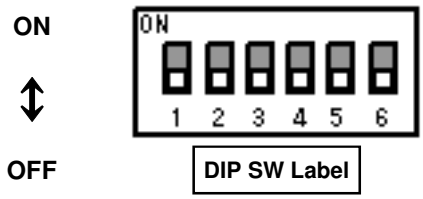

Pin No.	Function	Switch Position / Setting			
2	DRY CONTACT function	OFF	Disable	ON	Enable
3	DRY CONTACT Input Logic	OFF	HI Input Active	ON	LO Input Active

- Please decide the type of dry contact you will be using and set the position of the DIP Switch No. 2 and 3 accordingly

[1] CHECK DRY CONTACT OF CARD KEY UNIT

	AIR CONDITIONER Standby	AIR CONDITIONER Operating
CARD KEY (Door Switch)	REMOVE 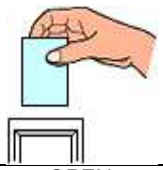	INSERT 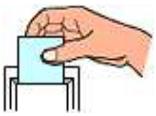
Contact type a	OPEN	CLOSE
Contact type b	CLOSE	OPEN

[2] SET THE POSITION OF DIP SWITCH

POSITION CONDITION OF DIP SWITCH
INITIAL CONDITION (CARD KEY NO USE) 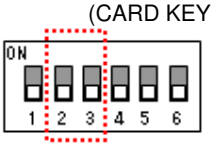 No.2 : OFF No.3 : OFF
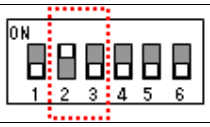 **HI Input Active** No.2 : ON No.3 : OFF
LO Input Active No.2 : ON No.3 : ON

After all connection has been done as below diagram, ON the breaker and push ON button of wireless remote controller or wired remote controller to operate the air conditioner unit.

- When the CARD KEY is in insert condition, the air conditioner operation is allowable by remote controller.
- When the dry contact switch on the Card Key Unit is open (refer to diagram below for contact type a), the unit stops to operate (it takes 10 seconds to stop the unit operation after the dry contact switch on the card key turns off) and vice versa.
- When the card key is removed from the Card Key Unit, the wireless remote controller cannot be used.
- When the card key is removed from the Card Key Unit, the wired remote controller LCD display is activated; however it has no control over the unit.
- The suitable accessory Connecting Cord (accessory code#: SPX-WDC2 or SPX-WDC3) need to be used to connect the Card Key Unit's dry contact switch to the connector on the control board of the indoor unit. Please refer to Table 1 to select suitable accessory code# for the concerning indoor model.

Example of wiring connection to Card Key Unit will be as below (reference only)

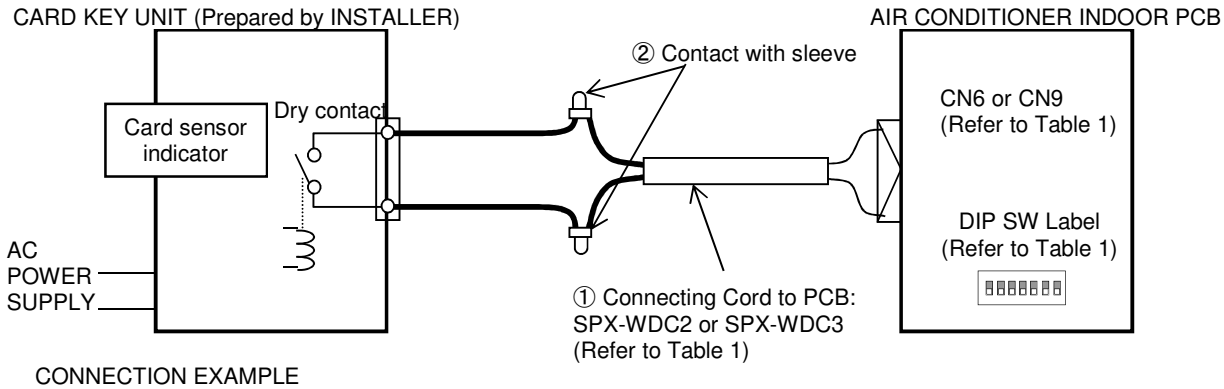

- CONNECTION EXAMPLE

i. Pin No. 3 of DIP SWITCH is set to OFF position (HI Input Active) for Dry Contact Type a

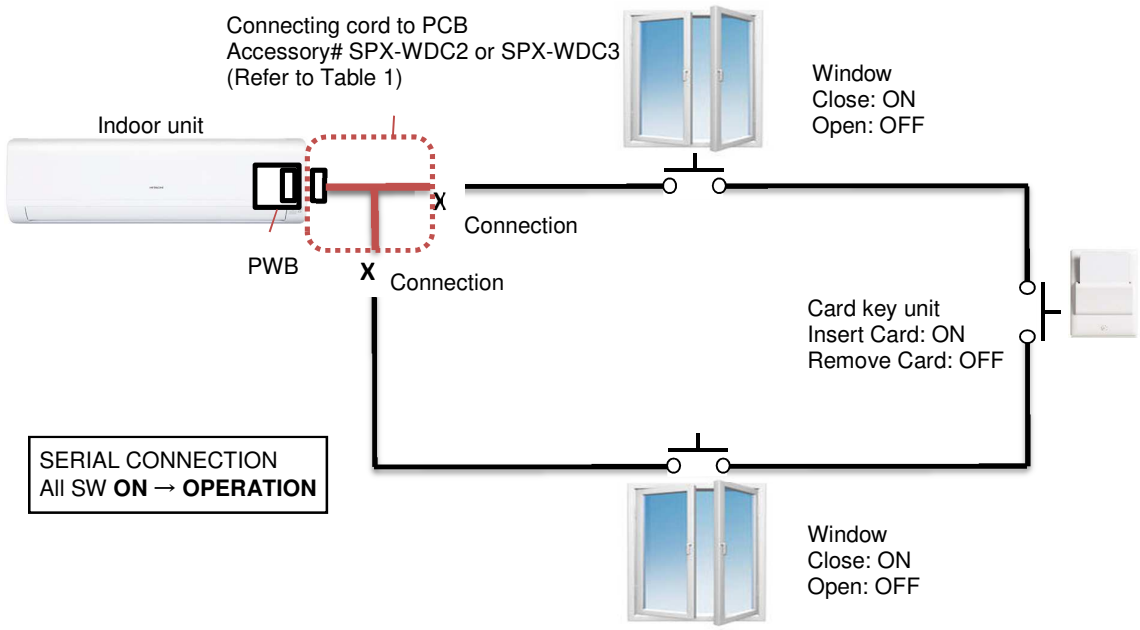

ii. Pin No. 3 of DIP SWITCH is set to ON position (LO Input Active) for Dry Contact Type b

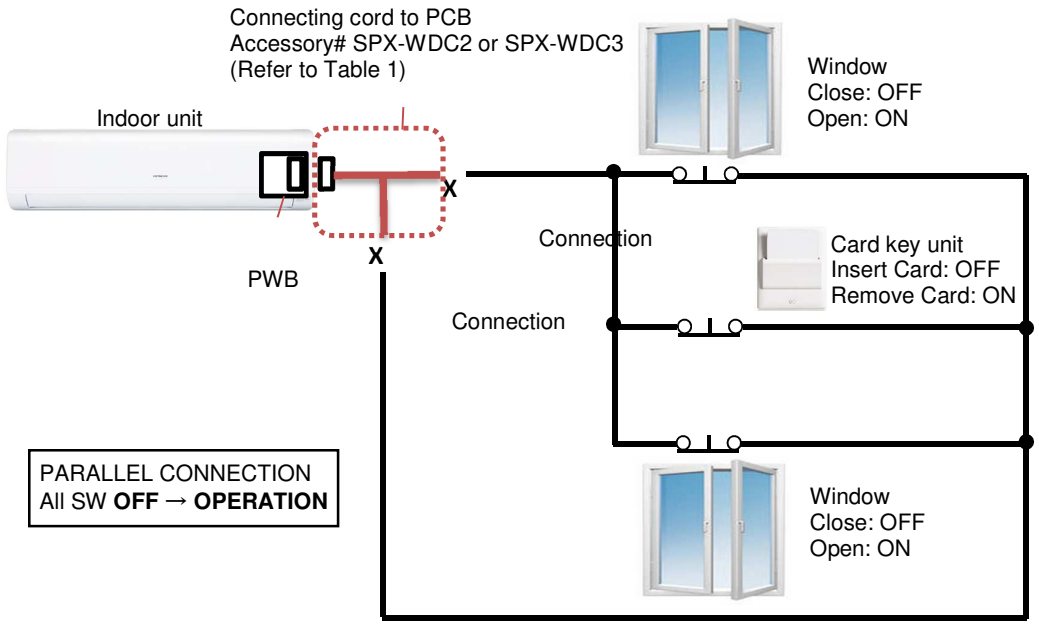

Please refer to the actual manual supplied with the optional connecting cords SPX-WDC2/WDC3 for more details.

9.6. DISTRIBUTOR – SPX-DST1

The optional distributor is to be used together with the wired remote controller when there is a need to centralize the control of multiple indoor units using only a single wired remote controller.

A single distributor could be connected further to 3 separate distributors so that up to 13 units of indoor could be controlled by a single wired remote controller.

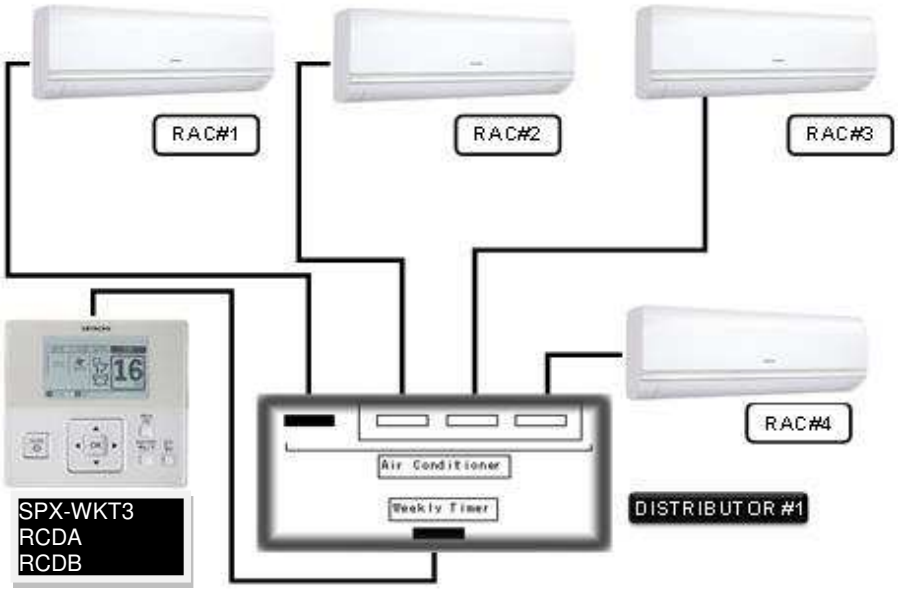

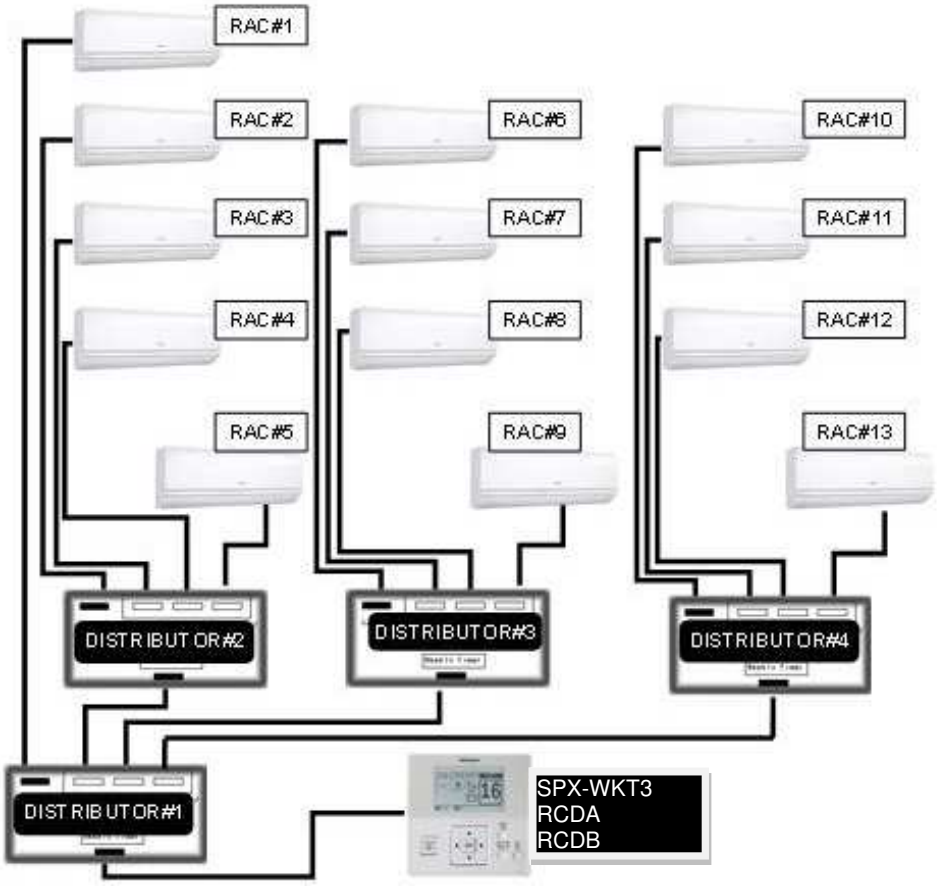

9.7. REMOTE SENSOR - SPX-RTH1

This remote sensor is applicable to Duct type indoor unit for Hitachi split system air conditioner.

9.7.1. SELECTION OF INSTALLATION POSITION

The thermistor for detecting room temperature is installed inside the remote sensor
The installation position of the remote sensor should be determined in consideration with the following conditions.

- Where the average room temperature can be detected.
- Where is not exposed to the sun
- Where the heat source is not located near the remote sensor.
- Where the discharge air from the air conditioner does not blow directly.
- Where is not affected by the outdoor air when opening / closing the door, etc

9.7.2. INSTALLATION PROCEDURE

- **In case of mounting onto the wall (Fig.1)**
  - Make the wiring on the sensor box, and let the wires for sensor through the box slot.
  - Fix the sensor box onto the wall with 2 screws (B)
  - In case that the sensor box can not be fixed onto the wall with screws, fix it onto the wall by using the double sided adhesive tapes, etc.
- **In case of mounting onto Electrical Switch box (Fig. 2 and 3)**
  - Make the holes for fixing sensor box on the Switch Box Cover (A) (field-supplied) as shown on the Fig. 3 and fix the sensor box to the plate with screws (B)
  - Pay attention that the hole for air intake on the sensor box (C) may not be shut.

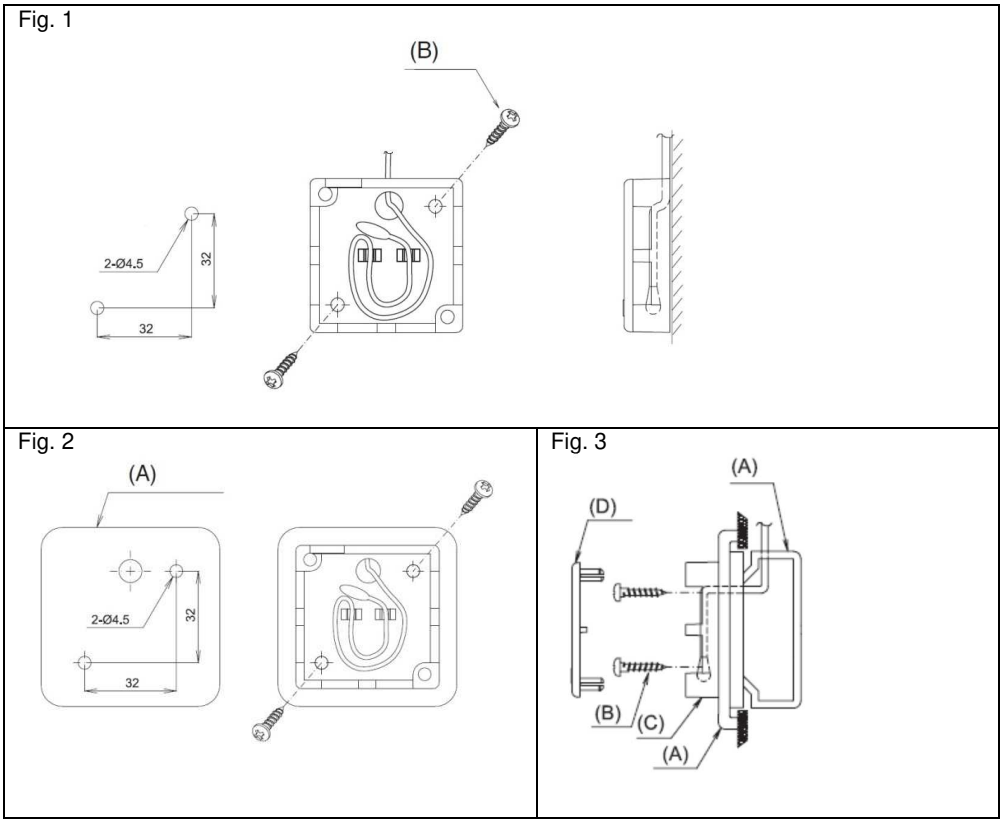

9.7.3. WIRING PROCEDURES

- Remove the original room thermistor from CN1 at the indoor printed circuit board.
- Connect the cord (15m) of the remote sensor to CN1 (Black) of the indoor printed circuit board.

Please refer to the actual manual supplied with the SPX- RTH1 for more details.

Specification in this document are subject to change without notice, in order that Johnson Controls Hitachi Air Conditioning Malaysia Sdn. Bhd. may bring the latest innovations to their customers.

Johnson Controls Hitachi Air Conditioning Malaysia Sdn. Bhd.

TC_LC-R32(2019)-00