HITACHI
Inspire the Next

TECHNICAL CATALOGUE

MONO SPLIT

RAC-18WPB
RAC-25WPB

RAK-18RPB
RAK-25RPB

RAC-35WPB

RAK-35RPB
RAK-50RPB

RAC-50WPB

HITACHI

Specifications in this catalogue are subject to change without prior notice in order for HITACHI to bring in the latest innovations to their customers

Whilst every effort is made to ensure that all dimensions and specifications are correct, any printers' error not rectified are outside the control of HITACHI, who cannot be held responsible for the same

CONTENTS

CONTENTS 1

1 SPECIFICATIONS 3
1.1. WALL TYPE (RAK-18RPB/25RPB/35RPB/50RPB) 3
1.2. WALL TYPE (RAC-18WPB/25WPB/35WPB/50WPB) 4

2 DIMENSIONAL DATA 5
2.1. WALL TYPE: RAK-18RPB/25RPB 5
2.2. WALL TYPE: RAK-35RPB/50RPB 6
2.3. WALL TYPE: RAC-18WPB/25WPB 7
2.4. WALL TYPE: RAC-35WPB 8
2.5. WALL TYPE: RAC-50WPB 9

3 CAPACITIES TABLE 10
3.1. CAPACITY CHARACTERISTIC CURVES 10
3.1.1. RAK-18RPB/RAC-18WPB 10
3.1.2. RAK-25RPB/RAC-25WPB 11
3.1.3. RAK-35RPB/RAC-35WPB 11
3.1.4. RAK-50RPB/RAC-50WPB 12
3.2. CORRECTION FACTORS ACCORDING TO PIPING LENGTH 13
3.3. CORRECTION FACTORS ACCORDING TO DEFROSTING OPERATION 15

4 SOUND DATA 16
4.1. RAC-18WPB 16
4.2. RAC-25WPB 17
4.3. RAC-35WPB 18
4.4. RAC-50WPB 19

5 WORKING RANGE 20
5.1. POWER SUPPLY 20
5.2. WORKING RANGE 20

6 ELECTRICAL DATA 21
6.1. INDOOR UNIT 21
6.2. OUTDOOR UNIT 21

7 WIRING DIAGRAM 22
7.1. RAK-18RPB, RAK-25RPB, RAK-35RPB, RAK-50RPB 22
7.2. RAC-18WPB, RAC-25WPB, RAC-35WPB 23
7.3. RAC-50WPB 24

8 REFRIGERANT CYCLE 25
8.1. WALL TYPE: RAK-18RPB/25RPB / RAC-18WPB/25WPB 25
8.2. WALL TYPE: RAK-35RPB / RAC-35WPB 25
8.3. WALL TYPE: RAK-50RPB / RAC-50WPB 26

9 CONTROL AND FUNCTION 27
9.1. WIRELESS REMOTE CONTROL FUNCTION 27
9.2. AUTO CHANGEOVER 29
9.3. SHIFT VALUE 29
9.4. OPERATION LOCK 30
9.5. SETTING THE PREVENTION OF MUTUAL INTERFERENCE 30
9.6. INTERMITTENT FAN SPEED SETTING 31
9.7. FAN SPEED SETTING IN THERMO OFF IN COOLING 32
9.8. ERROR CODE INFORMATION 33
9.9. ADDITIONAL FUNCTION VIA DIP-SWITCH SETTINGS 35
9.9.1. AUTO RESTART FUNCTION 35
9.9.2. HEATING/COOLING ONLY MODE SELECTION 35

10 OPTION LIST 36
10.1. WIRED REMOTE CONTROL – SPX-RCDB 36
10.1.1. SHIFT VALUE 36
10.1.2. ERROR CODE INFORMATION 37
10.2. H-LINK ADAPTOR – PSC 6RAD 40
10.2.1. SAFETY SUMMARY 40
10.2.2. INSTALLATION WORK 40
10.2.3. ELECTRICAL WIRING 41
10.2.4. DIP SWITCH SETTING 42
10.2.5. TEST RUN 43
10.3. DRY CONTACT (SPX-WDC3) APPLICATION (USING DIP SWITCH) 44
10.4. DISTRIBUTOR – SPX-DST1 46

1 SPECIFICATIONS

1.1. WALL TYPE (RAK-18RPB/25RPB/35RPB/50RPB)

INDOOR	Unit	RAK-18RPB	RAK-25RPB	RAK-35RPB	RAK-50RPB
Nominal capacity adjustable		no	no	no	no
Nominal Cooling capacity (min - max)	kW	2.00 (0.90 - 2.50)	2.50 (0.90 - 3.10)	3.50 (0.90- 4.00)	5.00 (1.90- 5.20)
Cooling sensible capacity	kW	1.9	2.2	2.7	3.8
Nominal Heating capacity (min - max)	kW	2.50 (0.90 - 3.20)	3.40 (0.90- 4.40)	4.20 (0.90- 5.00)	6.00 (2.2- 7.30)
Noise level cooling (sound pressure) (SL / L / M / H)	dB(A)	21/24/33/37	22/24/33/40	25/26/36/43	25/28/39/46
Noise level heating (sound pressure) (SL / L / M / H)	dB(A)	19/22/33/38	20/23/34/41	26/27/36/44	27/31/39/46
Noise level (sound power)	dB(A)	51	54	57	60
Air flow cooling mode (SL / L / M / H)	m^3/h	312 / 350 / 400 / 440	333 / 370 / 430 / 510	353 / 420 / 485 / 680	353 / 410 / 540 / 750
Air flow heating mode (SL / L / M / H)	m^3/h	312 / 350 / 420 / 480	333 / 400 / 500 / 570	363 / 480 / 570 / 780	380 / 500 / 610 / 820
Fan Motor	W	30	30	30	30
Dehumidification	l/h	1.2	1.4	1.6	2
Dimensions (H x W x D)	mm	280 x 780 x 218	280 x 780 x 218	295 x 900 x 230	295 x 900 x 230
Weight	kg	7.5	7.5	10	10
Colour		White (N9.5)	White (N9.5)	White (N9.5)	White (N9.5)
Condensate Drain	mm	φ16	φ16	φ16	φ16
Running current (C/H)	A	1.09-4.39 / 1.09-4.22	1.09-5.61 / 1.09-5.43	1.09-6.35 / 1.09-7.39	2.17-9.13 / 2.17-11.96
Power supply		230V / 1Ph / 50Hz	230V / 1Ph / 50Hz	230V / 1Ph / 50Hz	230V / 1Ph / 50Hz
Cable section (Interconnection)	mm^2	1.50 x 3 + EARTH	1.50 x 3 + EARTH	1.50 x 3 + EARTH	2.50 x 3 + EARTH
Piping diameter (Liq / Gas)	Inch	1/4" / 3/8"	1/4" / 3/8"	1/4" / 3/8"	1/4" / 1/2"
Drain diameter (ext)	mm	φ16	φ16	φ16	φ16
Remote control (standard/optional)		RAR-6N2/ SPX-RCDB	RAR-6N2/ SPX-RCDB	RAR-6N1/ SPX-RCDB	RAR-6N1/ SPX-RCDB
Filter					
ACL Filter		Wasabi	Wasabi	Wasabi	Wasabi
ACL part name		SPX-CFH22	SPX-CFH22	SPX-CFH22	SPX-CFH22
Pre-filter (Standard/Optional)		Wasable/ Stainless-SPX-SPF6	Wasable/ Stainless-SPX-SPF6	Wasable/ Stainless-SPX-SPF7	Wasable/ Stainless-SPX-SPF7

NOTE:

1. *The nominal cooling and heating capacity is the combined capacity of the HITACHI standard split system, and are based on the ISO 5151.*

Operation Conditions		*Cooling*	*Heating*
Indoor Air Inlet Temperature	*dB*	*27.0 °C*	*20.0 °C*
	WB	*19.0 °C*	
Outdoor Air Inlet Temperature	*dB*	*35.0 °C*	*7.0 °C*
	WB		*6.0 °C*
***Piping Length**: 5.0 meters; **Piping Lift**: 0 meter* ***dB**: Dry Bulb; **WB**: Wet Bulb*			

2. *The Sound Pressure Level is based on the following conditions:*

- *0.8 meter beneath indoor height center*
- *1 meter from Discharge grille*

The above data was measured in an anechoic chamber. Please take into consideration reflected sound of your specific site

1.2. WALL TYPE (RAC-18WPB/25WPB/35WPB/50WPB)

OUTDOOR		UNIT	RAC-18WPB	RAC-25WPB	RAC-35WPB	RAC-50WPB
Nominal Cooling capacity (min - max)		kW	2.00 (0.90 - 2.50)	2.50 (0.90 - 3.10)	3.50 (0.90 - 4.00)	5.00 (1.90 - 5.20)
Nominal Heating capacity (min - max)		kW	2.50 (0.90 - 3.20)	3.40 (0.90 - 4.40)	4.20 (0.90 - 5.00)	6.00 (2.2 - 7.30)
Nominal cooling power input (min - max)		kW	0.55 (0.25 - 1.01)	0.70 (0.25 - 1.29)	1.090 (0.25 - 1.46)	1.560 (0.50 - 2.10)
Nominal heating power input (min - max)		kW	0.58 (0.25 - 0.97)	0.88 (0.25 - 1.25)	1.100 (0.25 - 1.70)	1.660 (0.50 - 2.75)
EER / COP			3.64/4.31	3.57/3.86	3.21/3.82	3.21/3.61
SEER / SCOP			7.0/4.30	7.60/4.40	7.20/4.60	7.20/4.41
Energy class (SEER/SCOP)			A++/A+	A++/A+	A++/A++	A++/A+
Noise level cooling (sound pressure)		dB(A)	46	48	49	51
Noise level heating (sound pressure)		dB(A)	47	49	50	51
Noise level (sound power)		dB(A)	60	62	63	65
Air flow (Cooling / Heating)		m^3/h	1860/1620	1860/1620	1920/1620	2160/2160
Dimensions (H x W x D)		mm	530 x 660 x 278	530 x 660 x 278	548 × 750 × 288	600 x 792 x 299
Weight		kg	27.5	27.5	34	40
Colour			Beige (5Y7/2)	Beige (5Y7/2)	Beige (5Y7/2)	Beige (5Y7/2)
Power supply			230V / 1Ph / 50Hz	230V / 1Ph / 50Hz	230V / 1Ph / 50Hz	230V / 1Ph / 50Hz
Recommended fuse size		A	15	15	15	25
Starting current (C/H)		A	3.34/3.49	4.36/4.56	5.27/5.51	7.59/7.93
Running current (C/H)		A	1.09-4.39/ 1.09-4.22	1.09-5.61/ 1.09-5.43	1.09-6.35/ 1.09-7.39	2.17-9.13/ 2.17-11.96
Cable section (Power)		mm^2	1.50 x 2 + EARTH	1.50 x 2 + EARTH	1.50 x 2 + EARTH	2.50 x 2 + EARTH
Cable section (Interconnection)		mm^2	1.50 x 3 + EARTH	1.50 x 3 + EARTH	1.50 x 3 + EARTH	2.50 x 3 + EARTH
Piping diameter (Liq / Gas)			1/4" / 3/8"	1/4" / 3/8"	1/4" / 3/8"	1/4" / 1/2"
Minimum piping length		m	3	3	3	3
Maximum piping length / height difference		m	20 / 10	20 / 10	20 / 10	20 / 10
Current quantity of refrigerant / Chargeless		kg	0.950	0.950	1.050	1.250
Chargeless / Additional refrigerant charge		m / g/m	20/-	20/-	20/-	20/-
Working range (cooling / heating)		°C	-10 ~ 43 / -15 ~ 21	-10 ~ 43 / -15 ~ 21	-10 ~ 43 / -15 ~ 21	-10 ~ 43 / -15 ~ 21
Refrigerant			R410A	R410A	R410A	R410A
Condenser Fan			Propeller Fan	Propeller Fan	Propeller Fan	Propeller Fan
Compressor	Type		ROTARY	ROTARY	ROTARY	ROTARY
	Oil Charge	mL	320±20	320±20	320±20	370±20
	Oil Type		α68HES - H or equivalent	α68HES - H or equivalent	α68HES - H or equivalent	FV50S
	Coil Resistance	Ω	1.625 at 20℃	1.625 at 20℃	1.625 at 20℃	1.4 at 20℃
	Quantity		1	1	1	1

NOTE:

1. *The Sound Pressure Level is based on the following conditions:*

- *1 meter from the unit front surface and 1 meter from floor level*

  The above data was measured in an anechoic chamber. Please take into consideration reflected sound of your specific site

2 DIMENSIONAL DATA

2.1. WALL TYPE: RAK-18RPB/25RPB

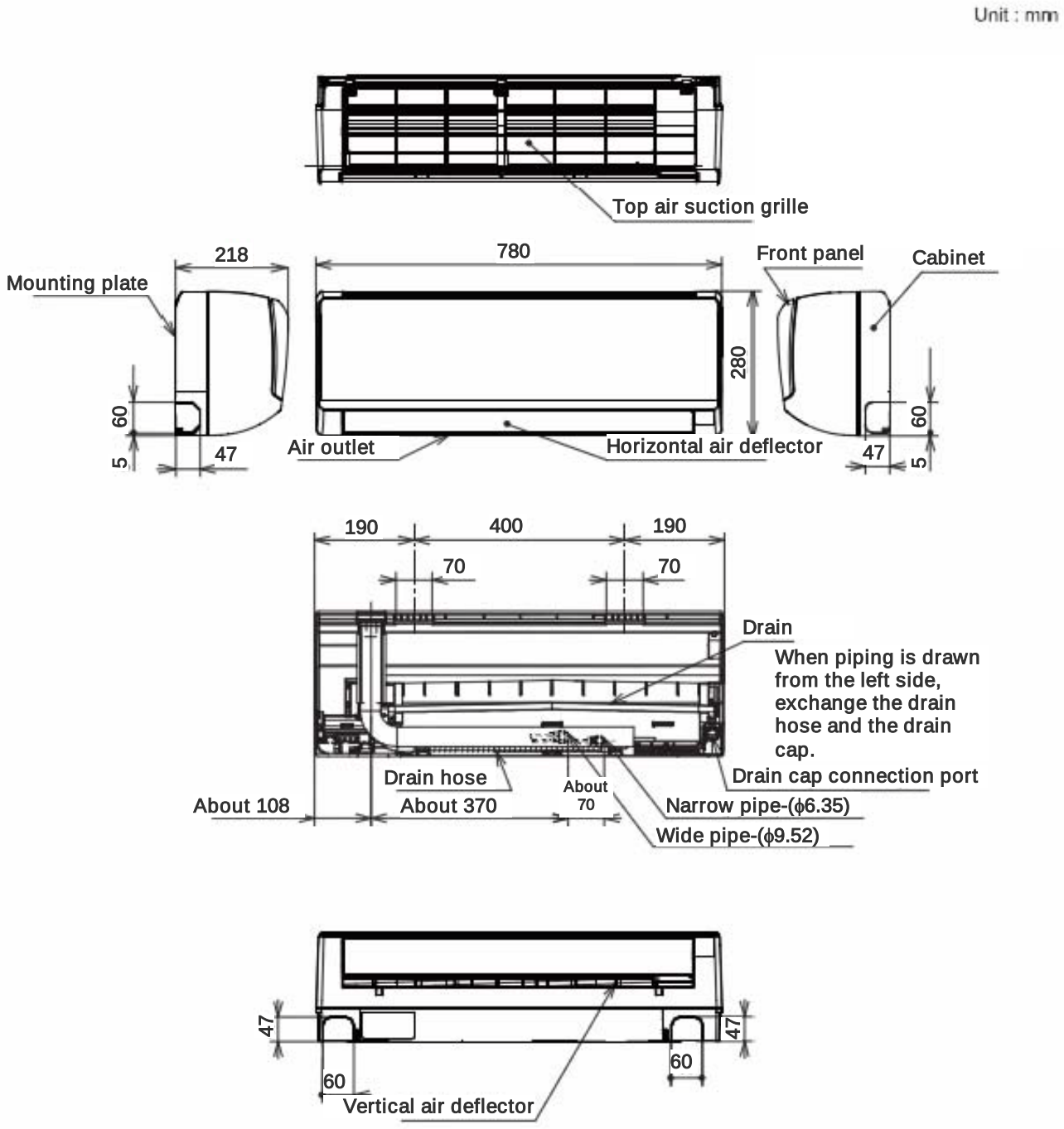

2.2. WALL TYPE: RAK-35RPB/50RPB

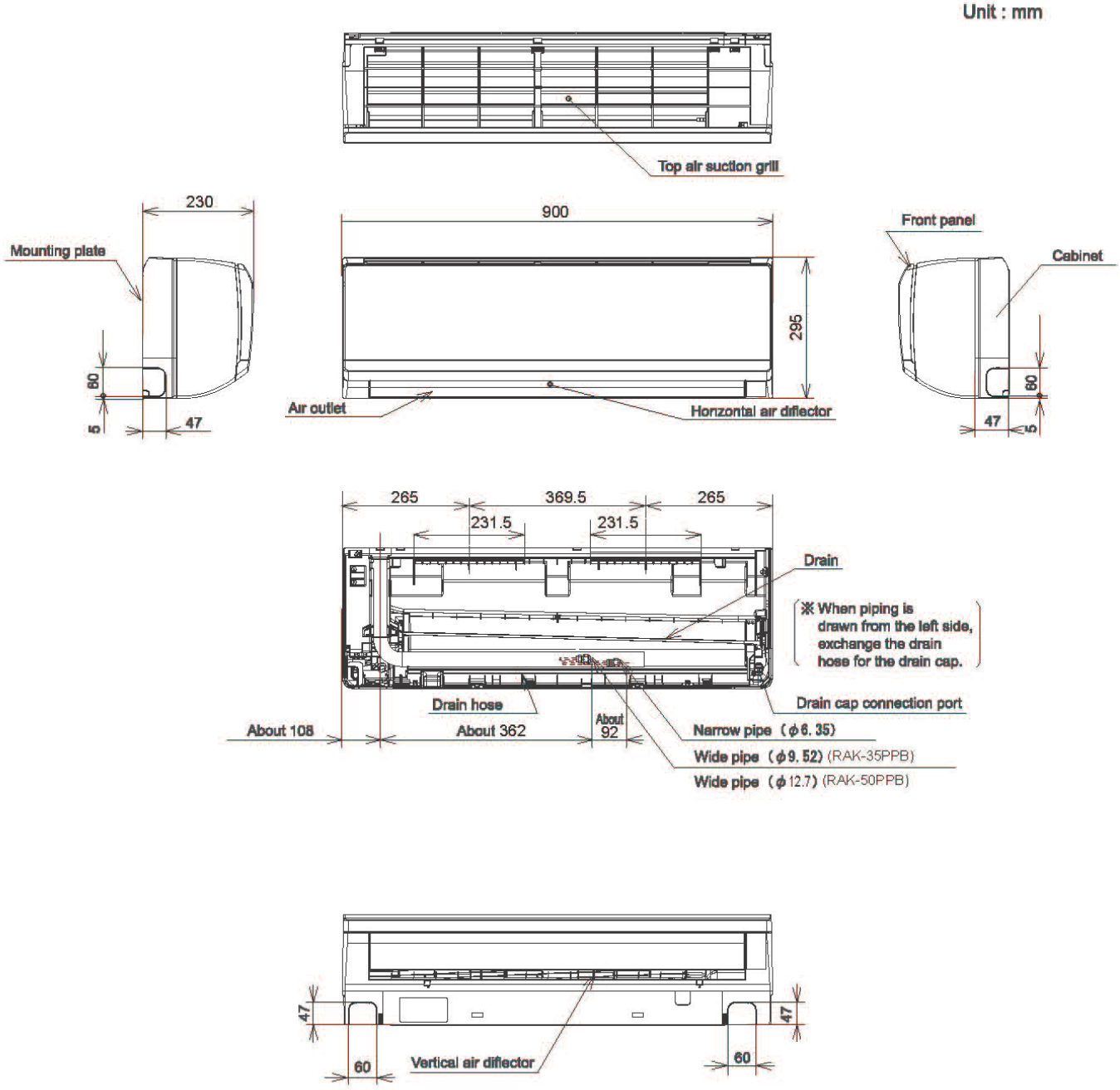

2.3. WALL TYPE: RAC-18WPB/25WPB

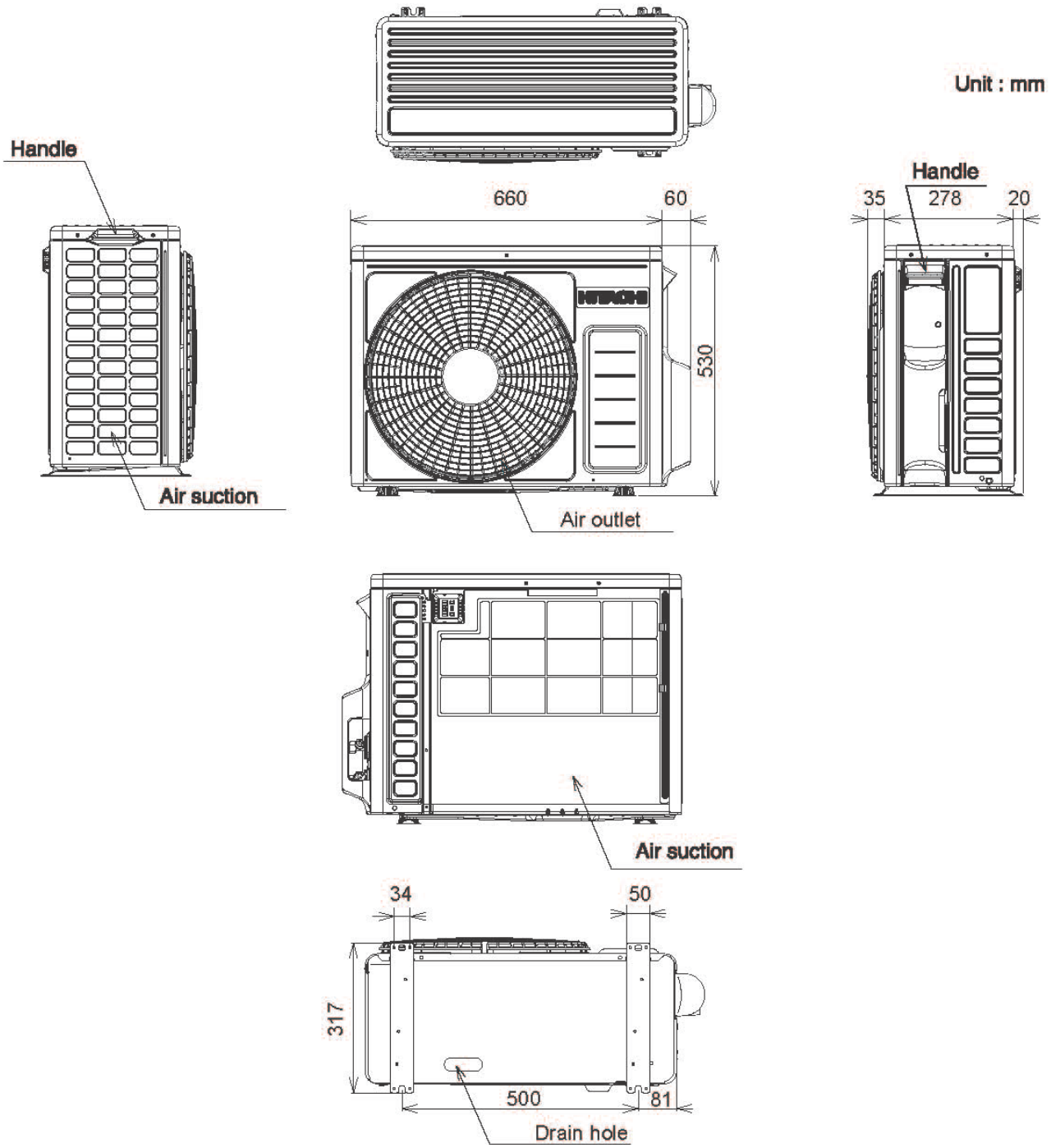

2.4. WALL TYPE: RAC-35WPB

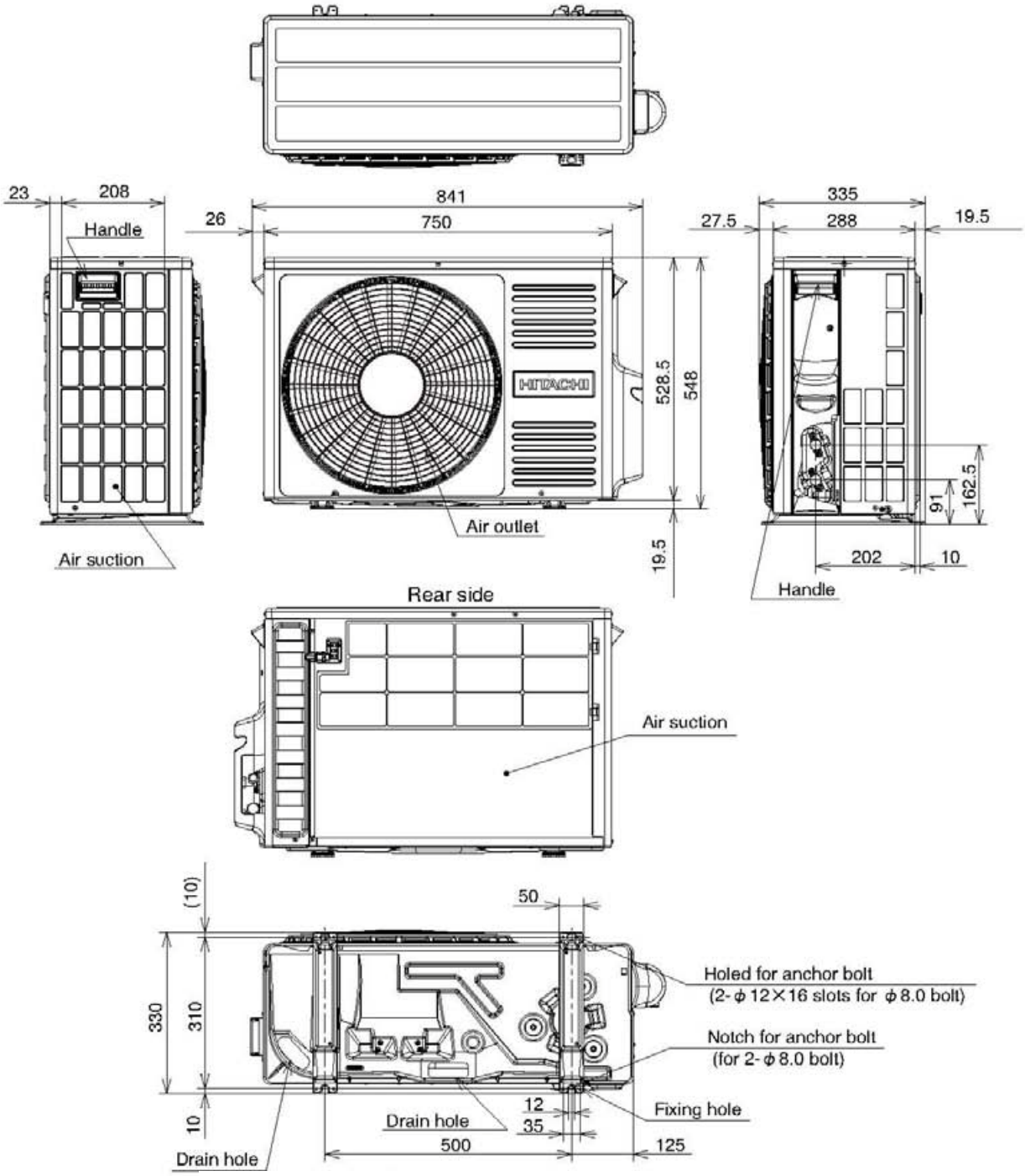

2.5. WALL TYPE: RAC-50WPB

Unit: mm

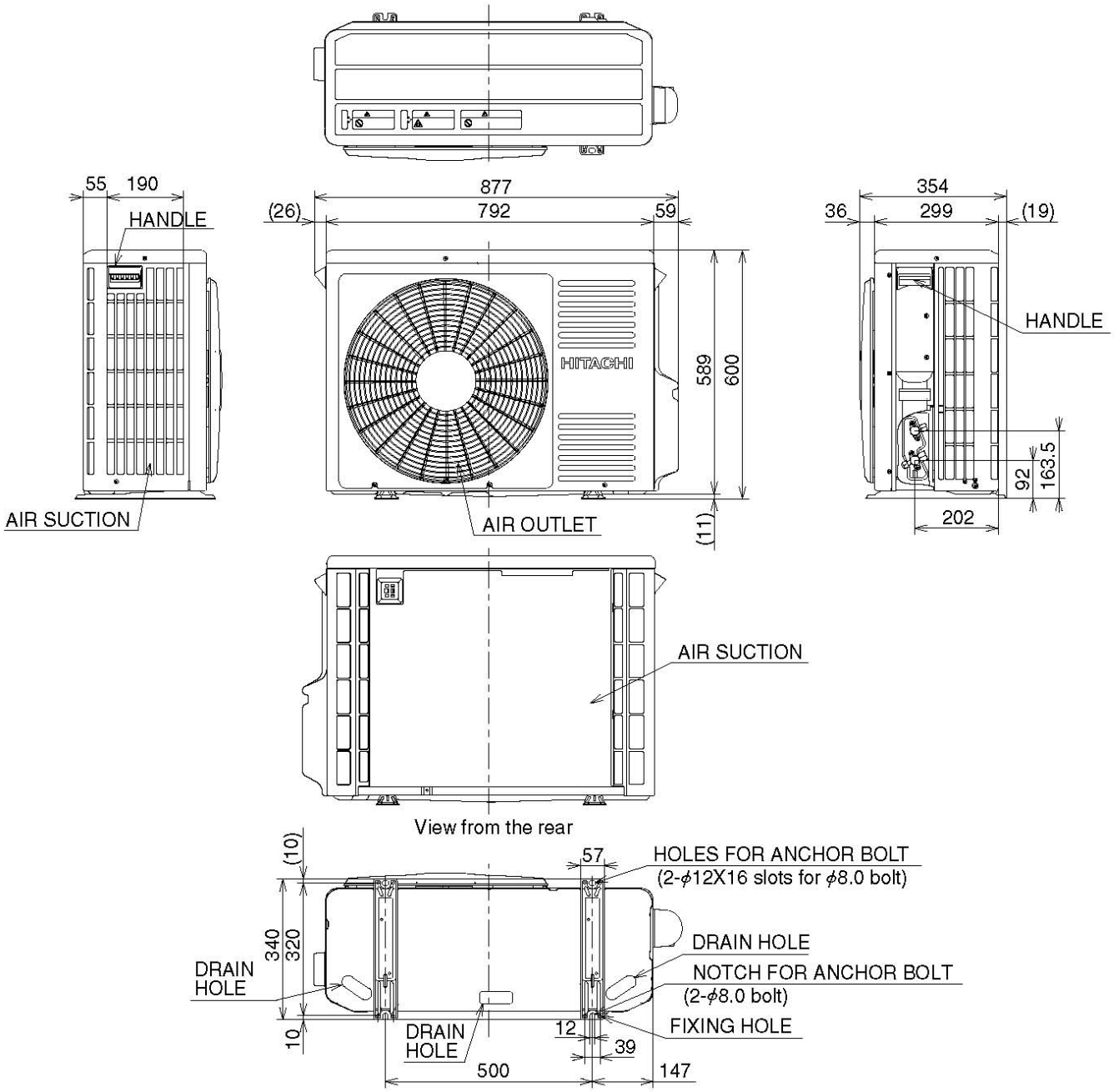

3 CAPACITIES TABLE

3.1. CAPACITY CHARACTERISTIC CURVES

The following charts show the characteristics of outdoor unit capacity, which corresponds with the operating ambient temperature of outdoor unit.

Conditions:

①Pipe length / height difference : 5m / 0m

②Indoor fan speed at High mode

③Capacity loss due to white frost and defrost operation is not included.

3.1.1. RAK-18RPB/RAC-18WPB

COOLING [50Hz, 230V]

INDOOR		OUTDOOR TEMPERATURE (°CDB)																				
EWB	EDB	-10			21			27			32			35			40			43		
°C	°C	TC	SHC	PI	TC	SHC	PI	TC	SHC	PI	TC	SHC	PI	TC	SHC	PI	TC	SHC	PI	TC	SHC	PI
12.0	18	1556	1371	307	1763	1828	364	1631	1688	430	1640	1706	506	1580	1631	528	1480	1538	567	1420	1463	589
14.0	20	1556	1371	307	1894	1828	364	1763	1705	435	1760	1706	512	1700	1650	534	1580	1538	572	1520	1481	600
16.0	22	1556	1459	312	2025	1828	369	1875	1705	440	1880	1706	517	1820	1650	545	1700	1538	583	1640	1481	605
18.0	25	1669	1564	316	2156	1986	374	1988	1846	445	2000	1856	523	1920	1781	545	1800	1669	589	1720	1594	611
19.0	27	1725	1617	321	2231	2092	379	2063	1934	450	2080	1950	528	2000	1875	550	1880	1763	589	1800	1688	611
22.0	30	1913	1600	321	2475	2074	379	2288	1916	450	2300	1931	534	2220	1856	556	2000	1800	611	1860	1763	644
24.0	32	2044	1600	326	2644	2074	384	2438	1916	455	2460	1931	534	2360	1856	561	2080	1838	627	1900	1819	666

HEATING [50Hz, 230V]

INDOOR		OUTDOOR TEMPERATURE (°CDB)																				
	EDB	-15			-10			-7			-5			0			7			10			15		
	°C	TC	SHC	PI	TC	SHC	PI	TC	SHC	PI	TC	SHC	PI	TC	SHC	PI	TC	SHC	PI	TC	SHC	PI	TC	SHC	PI
	16	1725		662	2038		680	2218		698	2249		689	2335		655	2471		626	2660		639	2954		664
	18	1738		656	2050		675	2234		689	2268		677	2355		642	2486		603	2674		615	2977		637
	20	1750		650	2063		669	2250		680	2286		666	2375		630	2500		580	2688		591	3000		610
	22	1763		644	2075		663	2266		671	2304		654	2395		618	2514		557	2701		567	3023		583
	24	1775		638	2088		657	2282		662	2322		643	2415		605	2529		534	2715		543	3046		556

EWB : Evaporator Wet Bulb temperature (°C)
EDB : Evaporator Dry Bulb temperature (°C)
(°CDB) : Outdoor Unit Inlet Air Dry Temperature (°C)

TC : Total Capacity (W)
SHC : Sensible Heating Capacity (W)
PI : Power Input

3.1.2. RAK-25RPB/RAC-25WPB

COOLING [50Hz, 230V]

INDOOR		OUTDOOR TEMPERATURE (°CDB)																				
EWB	EDB	-10			21			27			32			35			40			43		
°C	°C	TC	SHC	PI	TC	SHC	PI	TC	SHC	PI	TC	SHC	PI	TC	SHC	PI	TC	SHC	PI	TC	SHC	PI
12.0	18	1945	1470	391	2203	1960	464	2039	1809	547	2050	1829	644	1975	1749	672	1850	1648	721	1775	1568	749
14.0	20	1945	1470	391	2367	1960	464	2203	1828	553	2200	1829	651	2125	1769	679	1975	1648	728	1900	1588	763
16.0	22	1945	1564	397	2531	1960	470	2344	1828	560	2350	1829	658	2275	1769	693	2125	1648	742	2050	1588	770
18.0	25	2086	1677	403	2695	2129	476	2484	1979	566	2500	1990	665	2400	1910	693	2250	1789	749	2150	1709	777
19.0	27	2156	1734	409	2789	2242	482	2578	2073	572	2600	2090	672	2500	2010	700	2350	1889	749	2250	1809	777
22.0	30	2391	1715	409	3094	2224	482	2859	2054	572	2875	2070	679	2775	1990	707	2500	1930	777	2325	1889	819
24.0	32	2555	1715	415	3305	2224	488	3047	2054	579	3075	2070	679	2950	1990	714	2600	1970	798	2375	1950	847

HEATING [50Hz, 230V]

INDOOR		OUTDOOR TEMPERATURE (°CDB)																							
	EDB	-15			-10			-7			-5			0			7			10			15		
	°C	TC	SHC	PI	TC	SHC	PI	TC	SHC	PI	TC	SHC	PI	TC	SHC	PI	TC	SHC	PI	TC	SHC	PI	TC	SHC	PI
	16	2466		1088	3091		1219	3457		1308	3436		1258	3396		1117	3361		949	3738		1032	4337		1172
	18	2483		1079	3108		1210	3479		1294	3461		1240	3423		1099	3380		915	3756		995	4369		1131
	20	2500		1070	3125		1201	3500		1280	3486		1223	3450		1080	3400		880	3775		959	4400		1090
	22	2517		1061	3142		1192	3521		1266	3510		1205	3477		1061	3420		845	3794		922	4431		1049
	24	2534		1052	3159		1184	3543		1252	3535		1188	3504		1043	3439		811	3812		886	4463		1008

3.1.3. RAK-35RPB/RAC-35WPB

COOLING [50Hz, 230V]

INDOOR		OUTDOOR TEMPERATURE (°CDB)																				
EWB	EDB	-10			21			27			32			35			40			43		
°C	°C	TC	SHC	PI	TC	SHC	PI	TC	SHC	PI	TC	SHC	PI	TC	SHC	PI	TC	SHC	PI	TC	SHC	PI
12.0	18	1816	1355	405	2056	1807	482	1903	1668	567	2870	2530	1003	2765	2419	1046	2590	2280	1123	2485	2168	1166
14.0	20	1816	1355	405	2209	1807	482	2056	1685	574	3080	2530	1014	2975	2446	1057	2765	2280	1134	2660	2196	1188
16.0	22	1816	1442	412	2363	1807	488	2188	1685	581	3290	2530	1025	3185	2446	1079	2975	2280	1155	2870	2196	1199
18.0	25	1947	1546	418	2516	1963	494	2319	1824	588	3500	2752	1036	3360	2641	1079	3150	2474	1166	3010	2363	1210
19.0	27	2013	1599	424	2603	2068	501	2406	1911	594	3640	2891	1046	3500	2780	1090	3290	2613	1166	3150	2502	1210
22.0	30	2231	1581	424	2888	2050	501	2669	1894	594	4025	2863	1057	3885	2752	1101	3500	2669	1210	3255	2613	1275
24.0	32	2384	1581	431	3084	2050	507	2844	1894	601	4305	2863	1057	4130	2752	1112	3640	2724	1243	3325	2697	1319

HEATING [50Hz, 230V]

INDOOR		OUTDOOR TEMPERATURE (°CDB)																							
	EDB	-15			-10			-7			-5			0			7			10			15		
	°C	TC	SHC	PI	TC	SHC	PI	TC	SHC	PI	TC	SHC	PI	TC	SHC	PI	TC	SHC	PI	TC	SHC	PI	TC	SHC	PI
	16	3008		1202	3789		1277	4247		1335	4225		1315	4183		1247	4152		1186	4623		1236	5372		1322
	18	3029		1191	3810		1266	4273		1317	4255		1293	4216		1223	4176		1143	4646		1191	5411		1271
	20	3050		1180	3831		1255	4300		1300	4286		1271	4250		1200	4200		1100	4669		1145	5450		1220
	22	3071		1169	3852		1244	4327		1283	4316		1250	4284		1177	4224		1057	4692		1099	5489		1169
	24	3092		1158	3873		1233	4353		1265	4347		1228	4317		1153	4248		1014	4715		1054	5528		1118

EWB : Evaporator Wet Bulb temperature (°C)
EDB : Evaporator Dry Bulb temperature (°C)
(°CDB) : Outdoor Unit Inlet Air Dry Temperature (°C)

TC : Total Capacity (W)
SHC : Sensible Heating Capacity (W)
PI : Power Input

3.1.4. RAK-50RPB/RAC-50WPB

COOLING [50Hz, 230V]

INDOOR		OUTDOOR TEMPERATURE (°CDB)																				
EWB	EDB	-10			21			27			32			35			40			43		
°C	°C	TC	SHC	PI	TC	SHC	PI	TC	SHC	PI	TC	SHC	PI	TC	SHC	PI	TC	SHC	PI	TC	SHC	PI
12.0	18	3037	2181	679	3668	3102	861	3395	2864	1014	4100	3478	1435	3950	3325	1498	3700	3134	1607	3550	2981	1669
14.0	20	3037	2181	679	3941	3102	861	3668	2894	1026	4400	3478	1451	4250	3363	1513	3950	3134	1622	3800	3019	1700
16.0	22	3037	2321	690	4215	3102	872	3902	2894	1038	4700	3478	1466	4550	3363	1544	4250	3134	1654	4100	3019	1716
18.0	25	3256	2489	701	4488	3371	883	4137	3132	1050	5000	3784	1482	4800	3631	1544	4500	3402	1669	4300	3249	1732
19.0	27	3366	2573	711	4644	3550	895	4293	3281	1062	5200	3975	1498	5000	3822	1560	4700	3593	1669	4500	3440	1732
22.0	30	3732	2545	711	5151	3520	895	4761	3251	1062	5750	3937	1513	5550	3784	1576	5000	3669	1732	4650	3593	1825
24.0	32	3988	2545	722	5502	3520	906	5073	3251	1074	6150	3937	1513	5900	3784	1591	5200	3746	1778	4750	3707	1888

HEATING [50Hz, 230V]

INDOOR		OUTDOOR TEMPERATURE (°CDB)																							
	EDB	-15			-10			-7			-5			0			7			10			15		
	°C	TC	SHC	PI	TC	SHC	PI	TC	SHC	PI	TC	SHC	PI	TC	SHC	PI	TC	SHC	PI	TC	SHC	PI	TC	SHC	PI
	16	3890		1743	4796		1831	5324		1903	5399		1888	5604		1826	5931		1790	6478		1850	7339		1954
	18	3920		1727	4826		1814	5362		1876	5442		1856	5652		1790	5966		1725	6511		1781	7395		1877
	20	3950		1710	4856		1798	5400		1850	5486		1823	5700		1755	6000		1660	6544		1713	7450		1800
	22	3980		1693	4886		1781	5438		1824	5529		1790	5748		1720	6035		1595	6577		1644	7506		1723
	24	4010		1677	4916		1764	5476		1797	5573		1757	5796		1684	6069		1530	6610		1575	7561		1646

EWB : Evaporator Wet Bulb temperature (°C)
EDB : Evaporator Dry Bulb temperature (°C)
(°CDB) : Outdoor Unit Inlet Air Dry Temperature (°C)

TC : Total Capacity (W)
SHC : Sensible Heating Capacity (W)
PI : Power Input

3.2. CORRECTION FACTORS ACCORDING TO PIPING LENGTH

Correction Factor for **Cooling Capacity** according to Piping Length

The cooling capacity should be corrected according to the following formula:

CCA = CC x F

CCA: Actual Corrected Cooling Capacity (kcal/h)
CC: Cooling Capacity in the Performance Table (kcal/h)
F: Correction Factor Based on the Equivalent Piping Length

Correction Factor for **Heating Capacity** according to Piping Length

The heating capacity should be corrected according to the following formula:

HCA= HC x F

HCA: Actual Corrected Heating Capacity (kcal/h)
HC: Heating Capacity in the Performance Table (kcal/h)
F: Correction Factor Based on the Equivalent Piping Length

The correction factors are shown in the following figure.

Equivalent Piping Length for:

- One 90º Elbow is 0.5m.
- One 180º Curve is 1.5m.

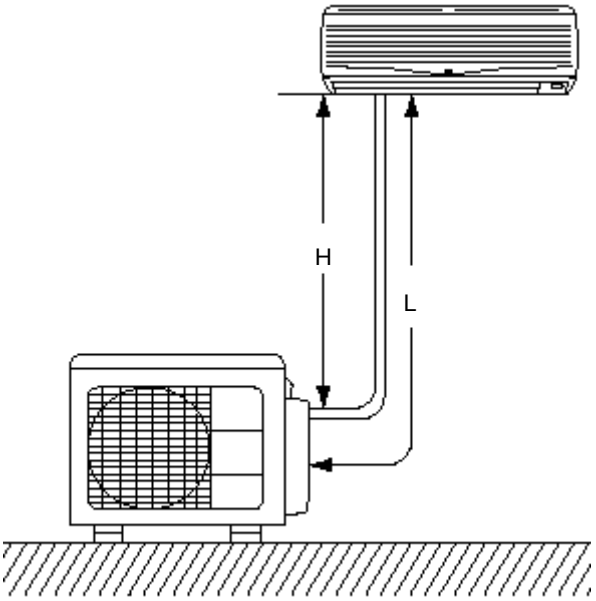

H: Vertical Distance Between Indoor Unit and Outdoor Units in Meters

L: Actual One-Way Piping Length Between Indoor Unit and Outdoor Unit in Meters

EL: Equivalent Total Distance Between Indoor Unit and Outdoor Unit in Meters (Equivalent One-Way Piping Length)

Models : RAK-18RPB/RAC-18WPB, RAK-25RPB/RAC-25WPB

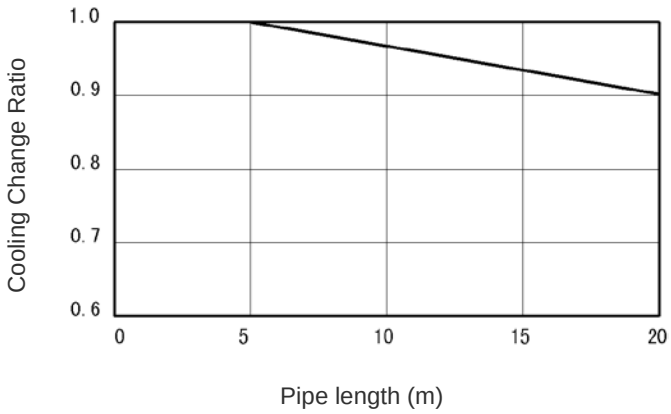

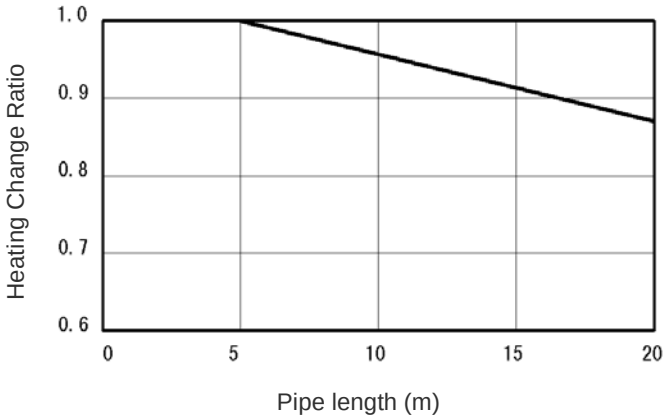

Models : RAK-35RPB/RAC-35WPB

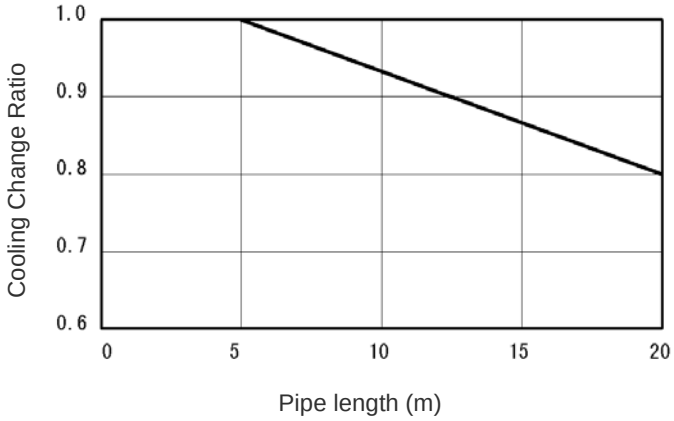

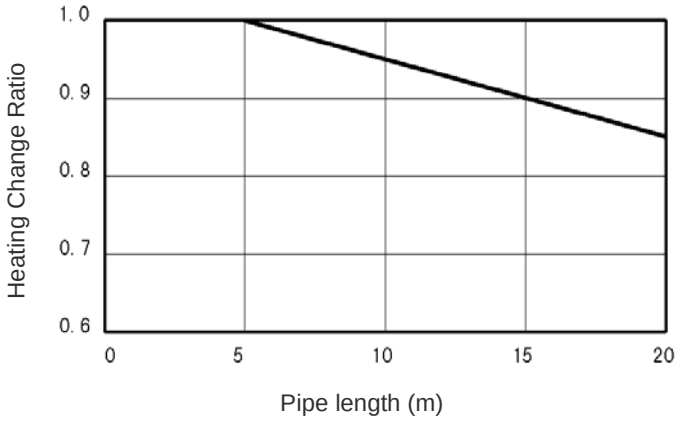

Models : RAK-50RPB/RAC-50WPB

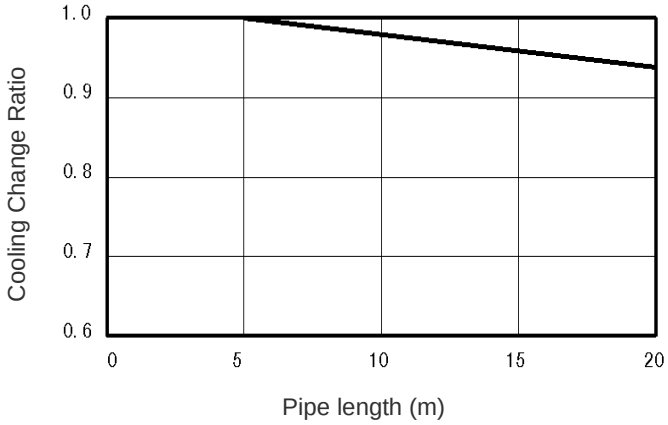

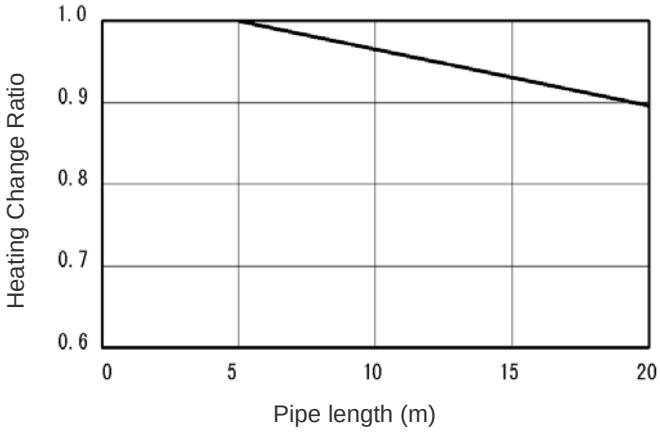

3.3. CORRECTION FACTORS ACCORDING TO DEFROSTING OPERATION

The heating capacity in the preceding paragraph, excludes the condition of the frost or the defrosting operation period. In consideration of the frost or the defrosting operation, the heating capacity is corrected by the equation below.

Corrected heating capacity = Defrost Correction factor x unit capacity

OUTDOOR TEMPERATURE (°CDB)	-15	-10	-7	-5	0	7	10	15
Correction factor (humidity rate85% RH)	0.95	0.95	0.89	0.85	0.81	1.0	1.0	1.0

Correction Factor

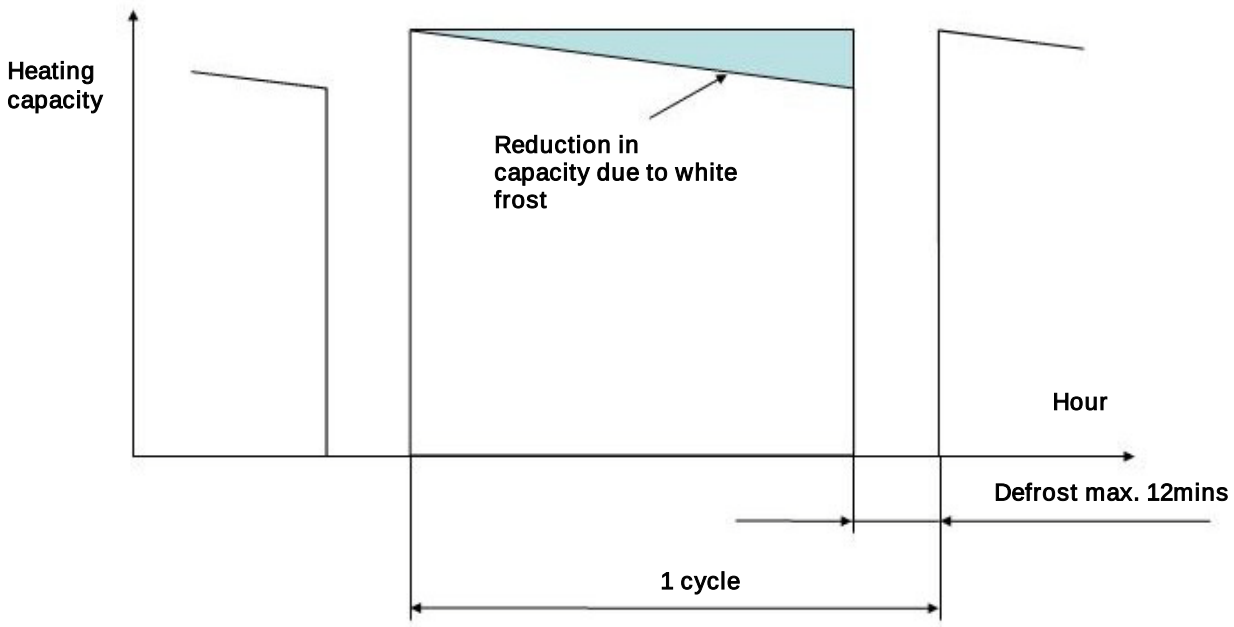

NOTE:
The correction factor is not valid for special conditions such as snowfall or operation in a transitional period.

4 SOUND DATA

4.1. RAC-18WPB

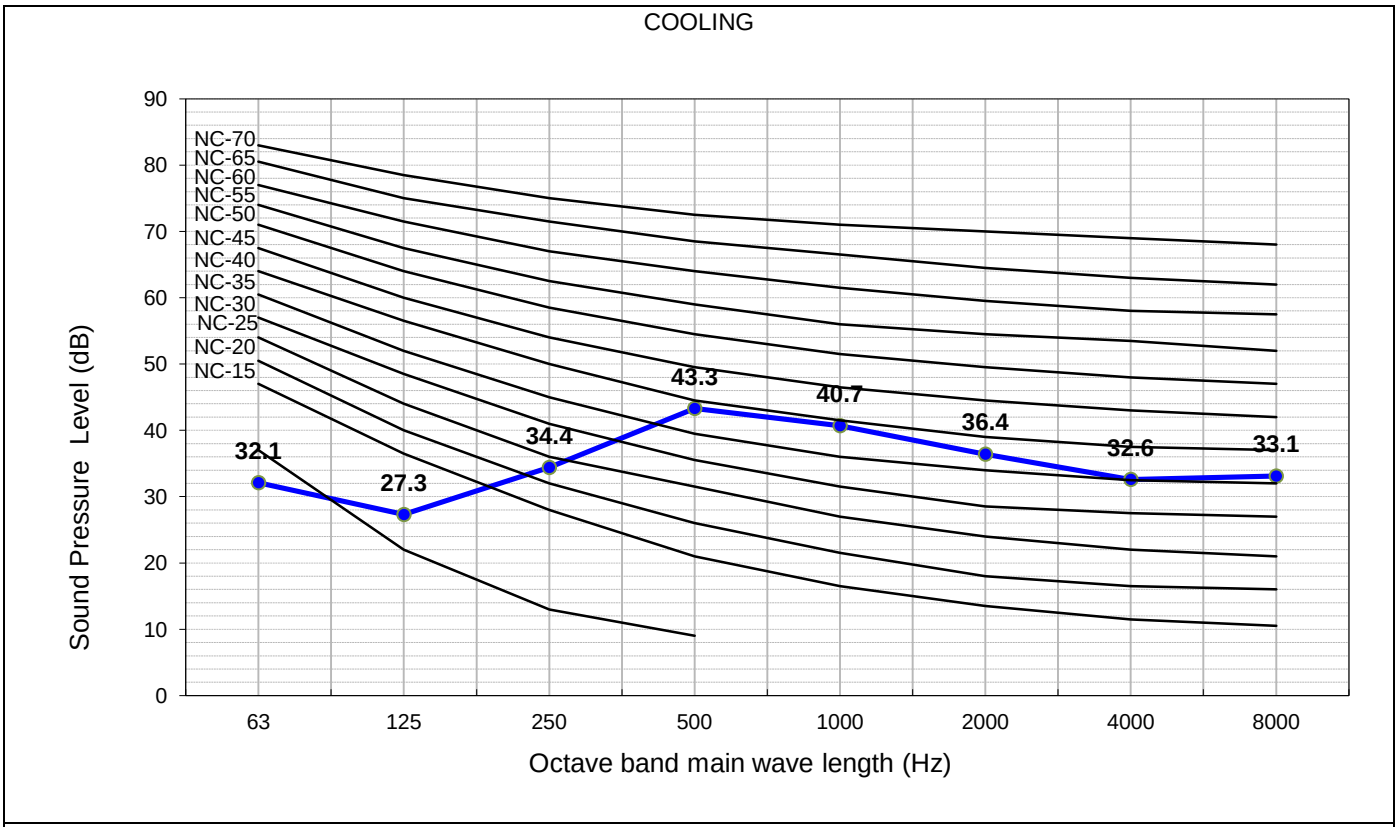

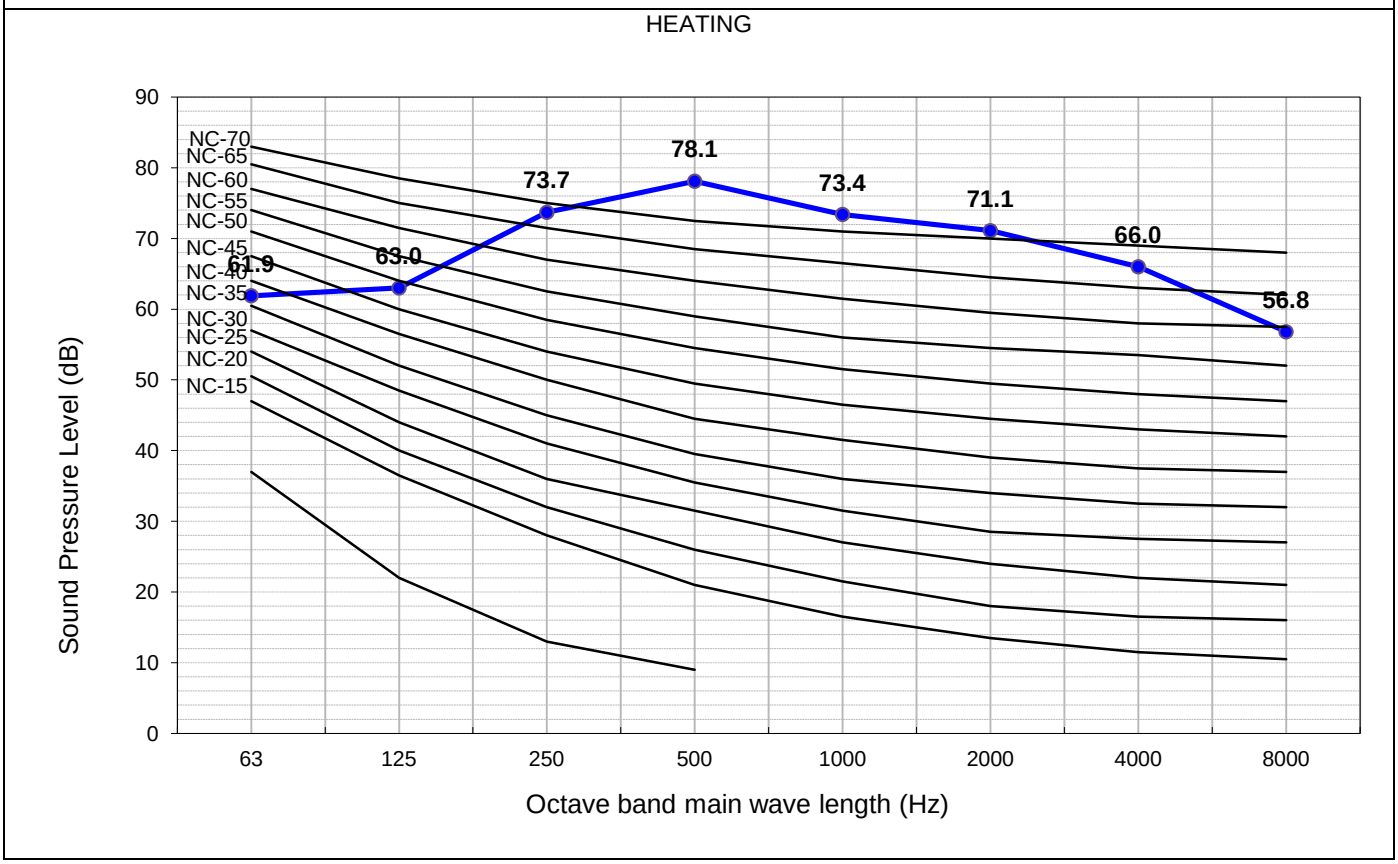

The Sound Pressure Level is based on the following conditions:

- *1 meter from the unit front surface and 1 meter from floor level*

The above data was measured in an anechoic chamber. Please take into consideration reflected sound of your specific site

4.2. RAC-25WPB

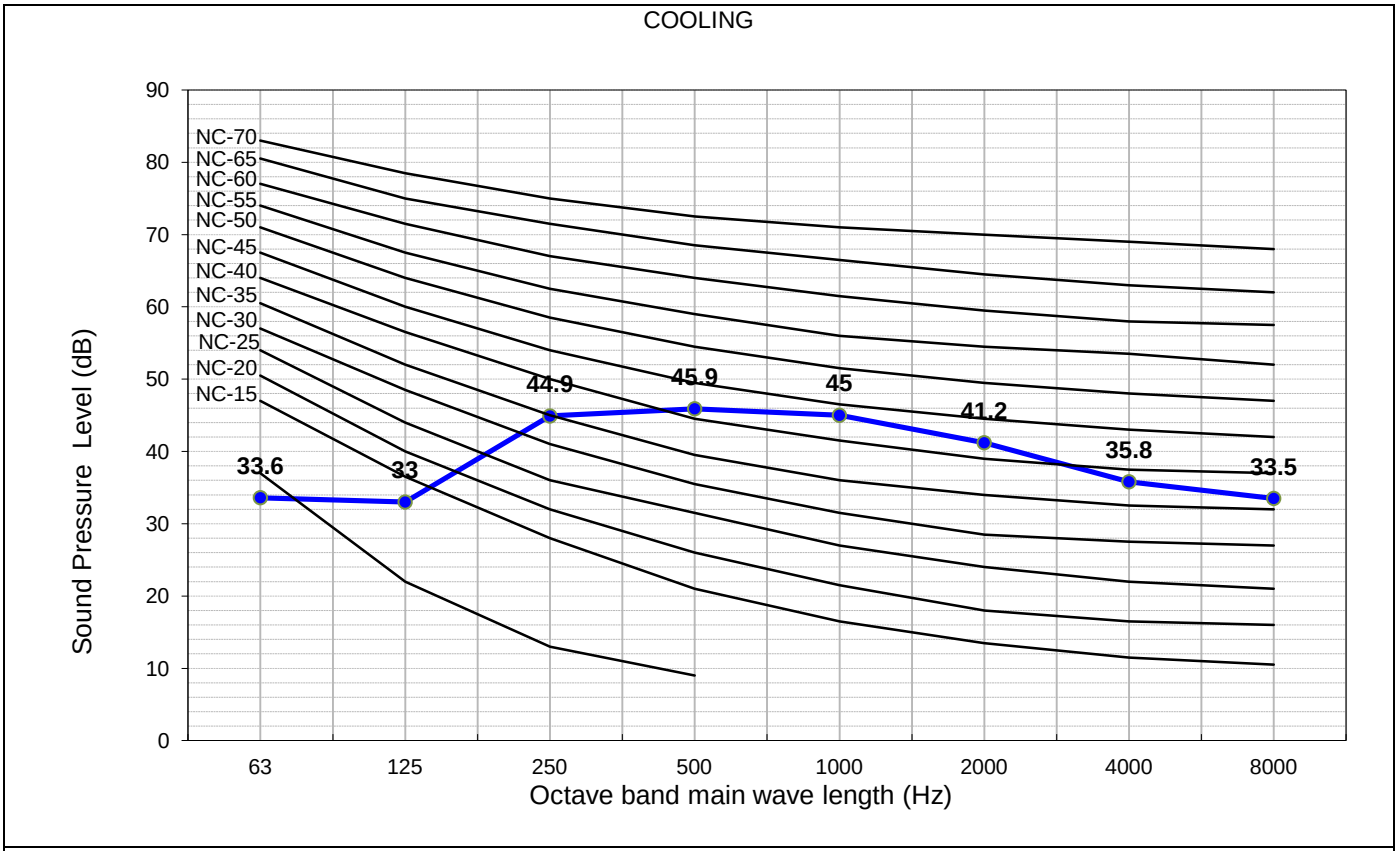

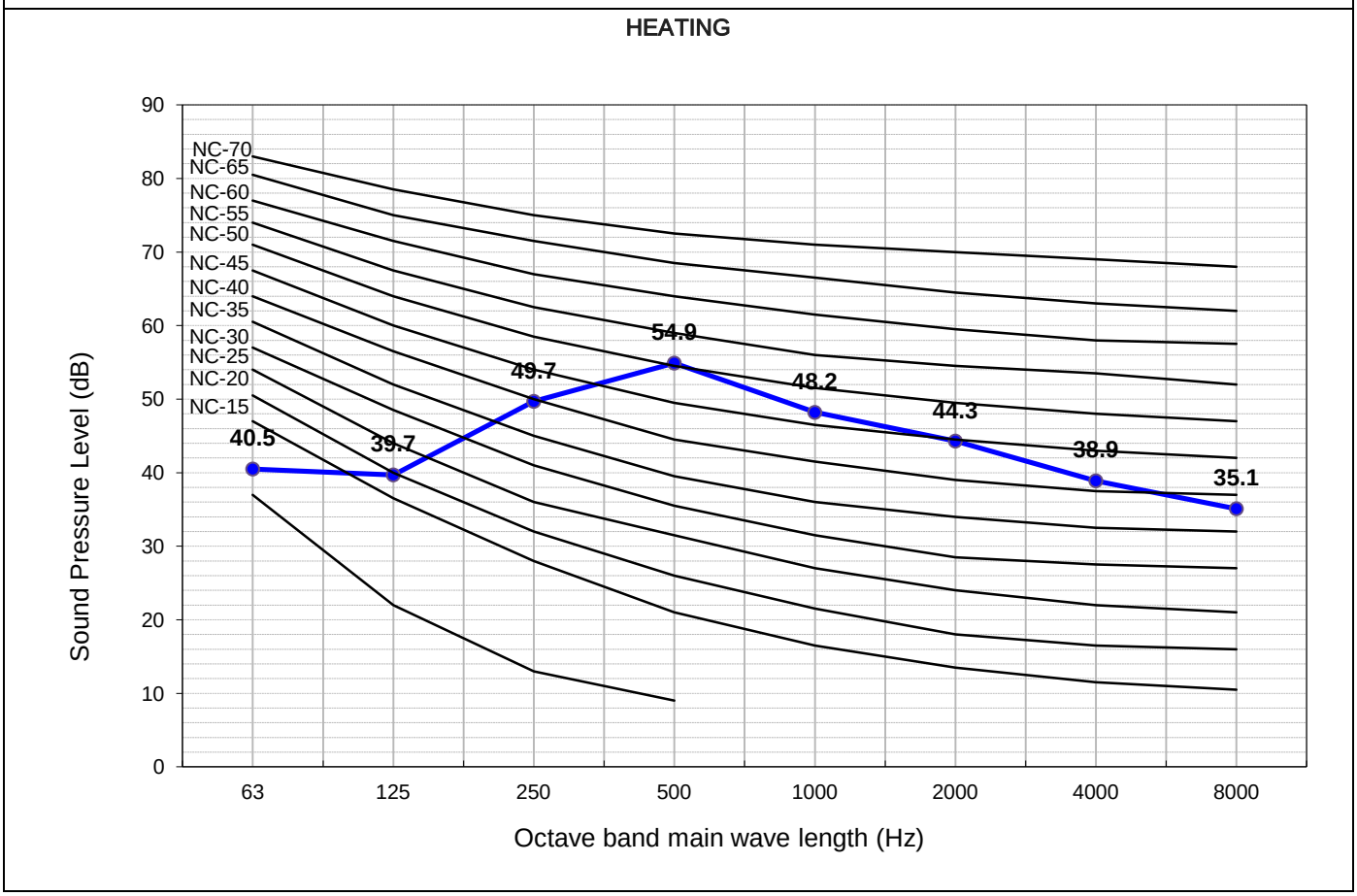

The Sound Pressure Level is based on the following conditions:

- *1 meter from the unit front surface and 1 meter from floor level*

The above data was measured in an anechoic chamber. Please take into consideration reflected sound of your specific site

4.3. RAC-35WPB

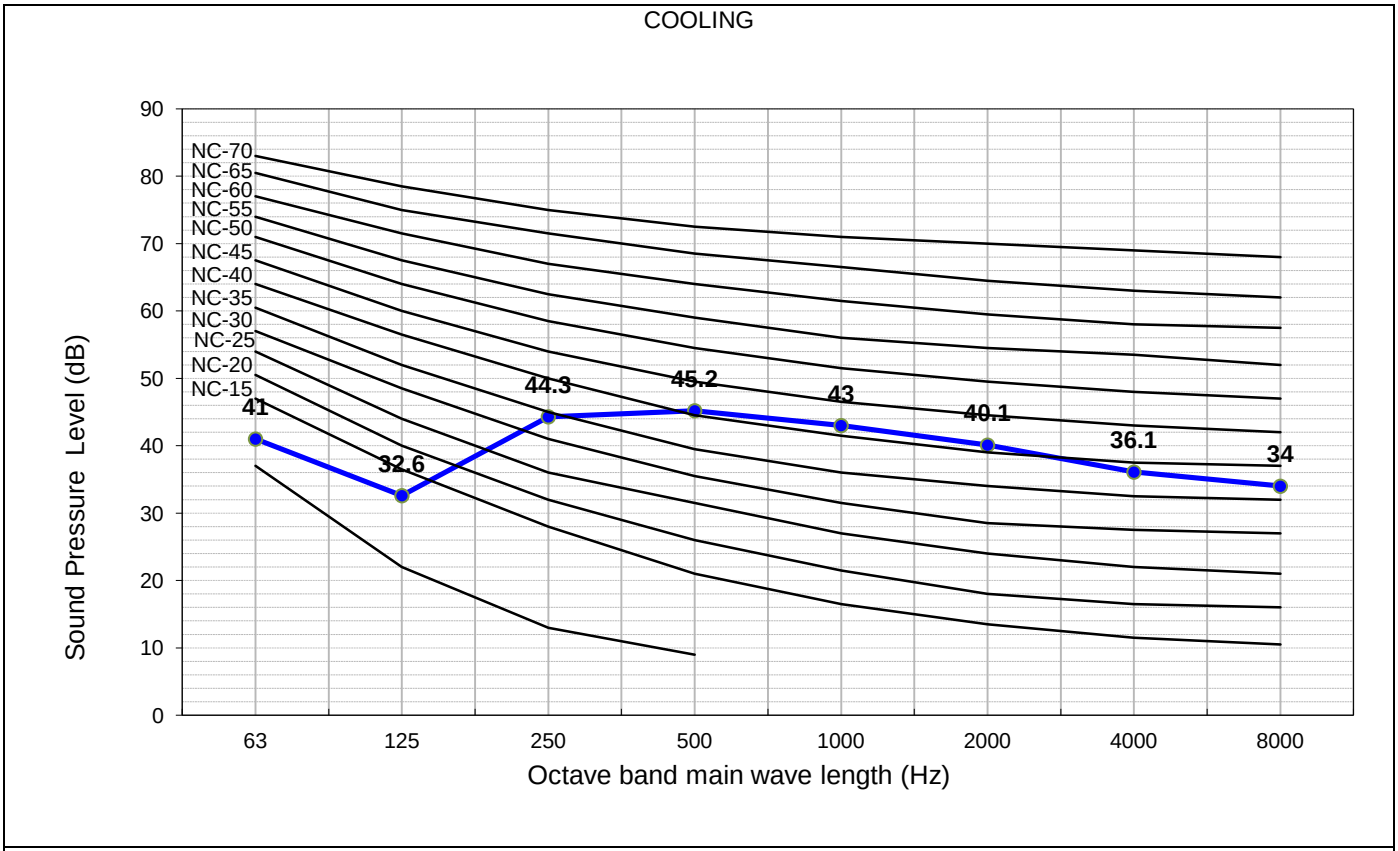

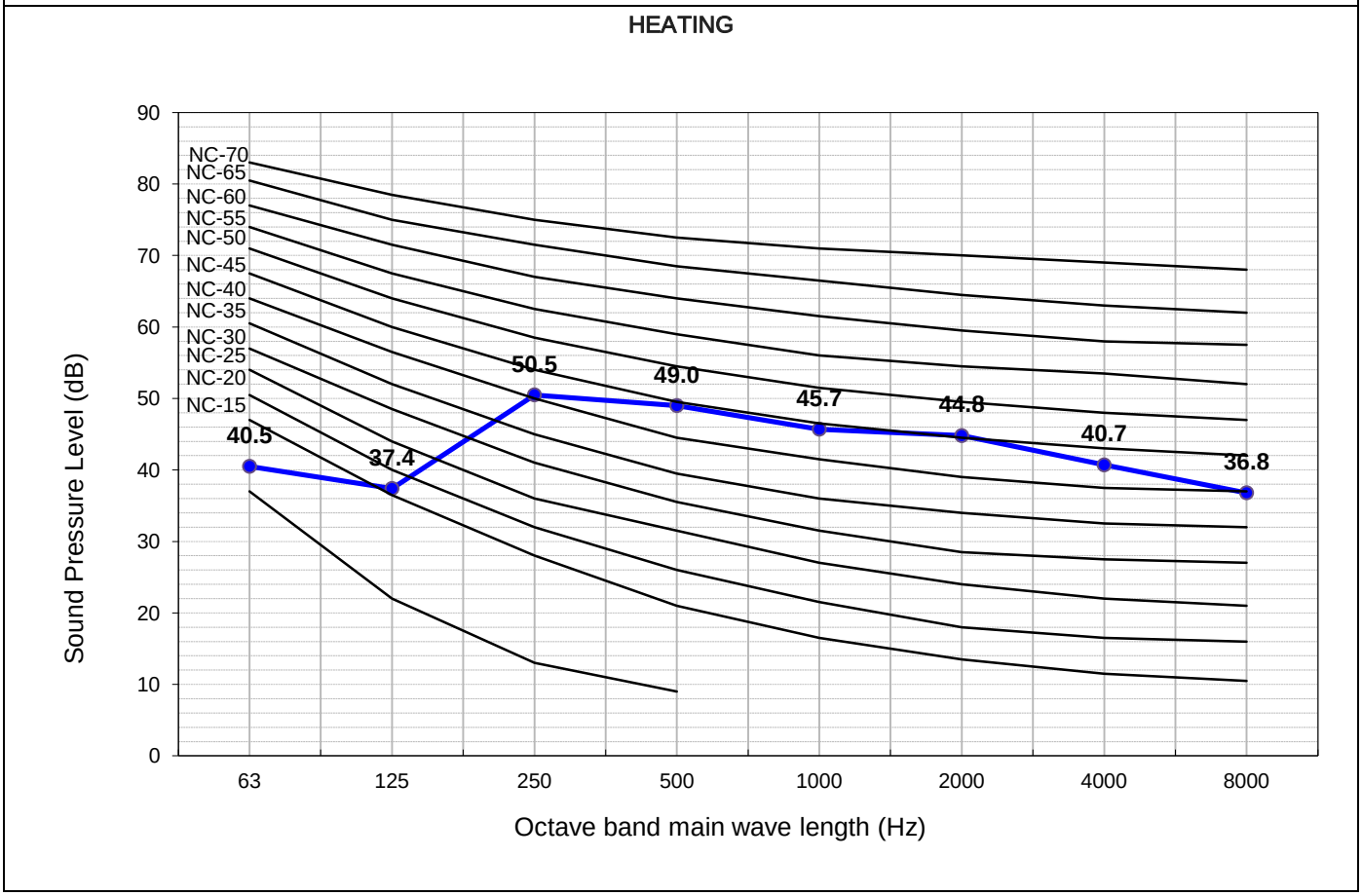

The Sound Pressure Level is based on the following conditions:

- *1 meter from the unit front surface and 1 meter from floor level*

The above data was measured in an anechoic chamber. Please take into consideration reflected sound of your specific site

4.4. RAC-50WPB

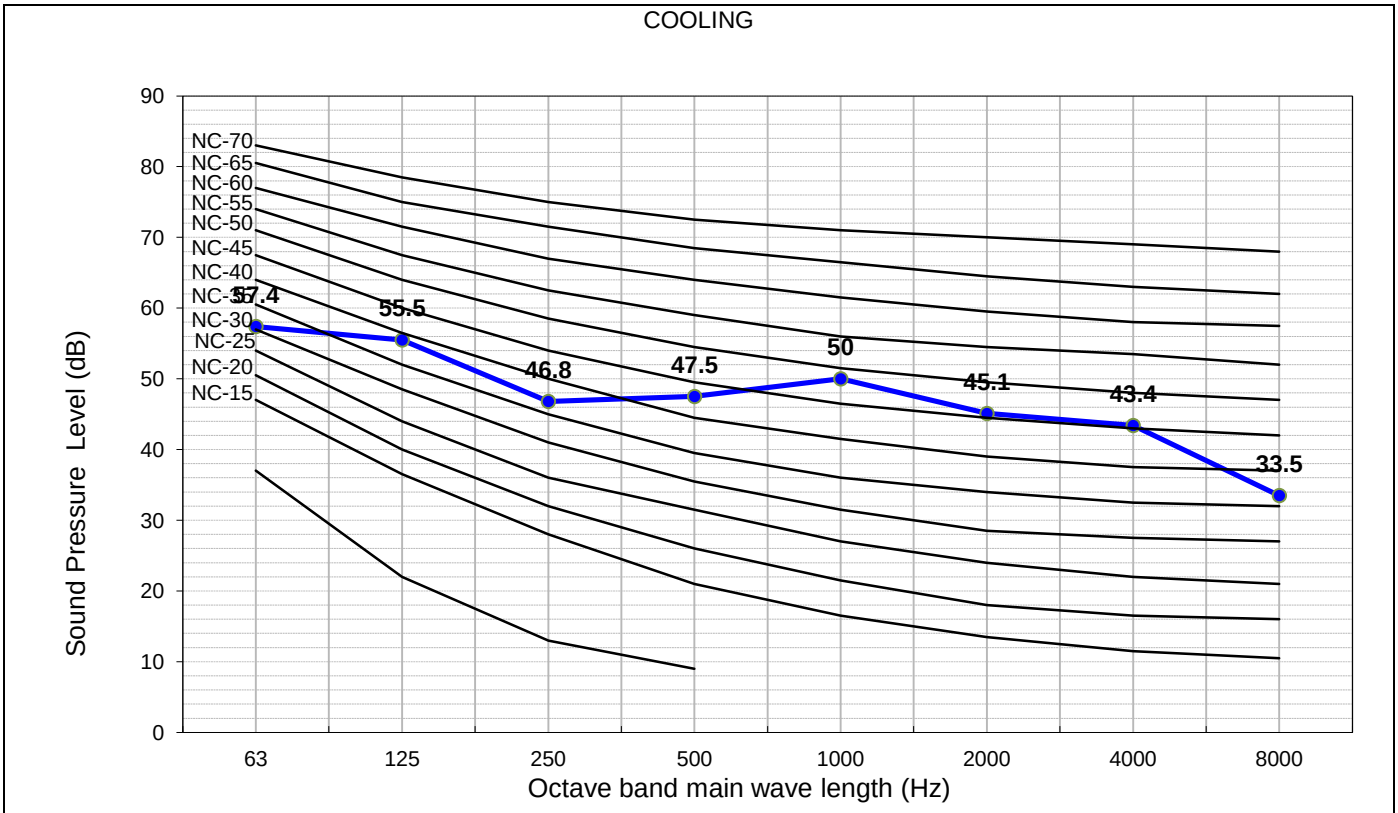

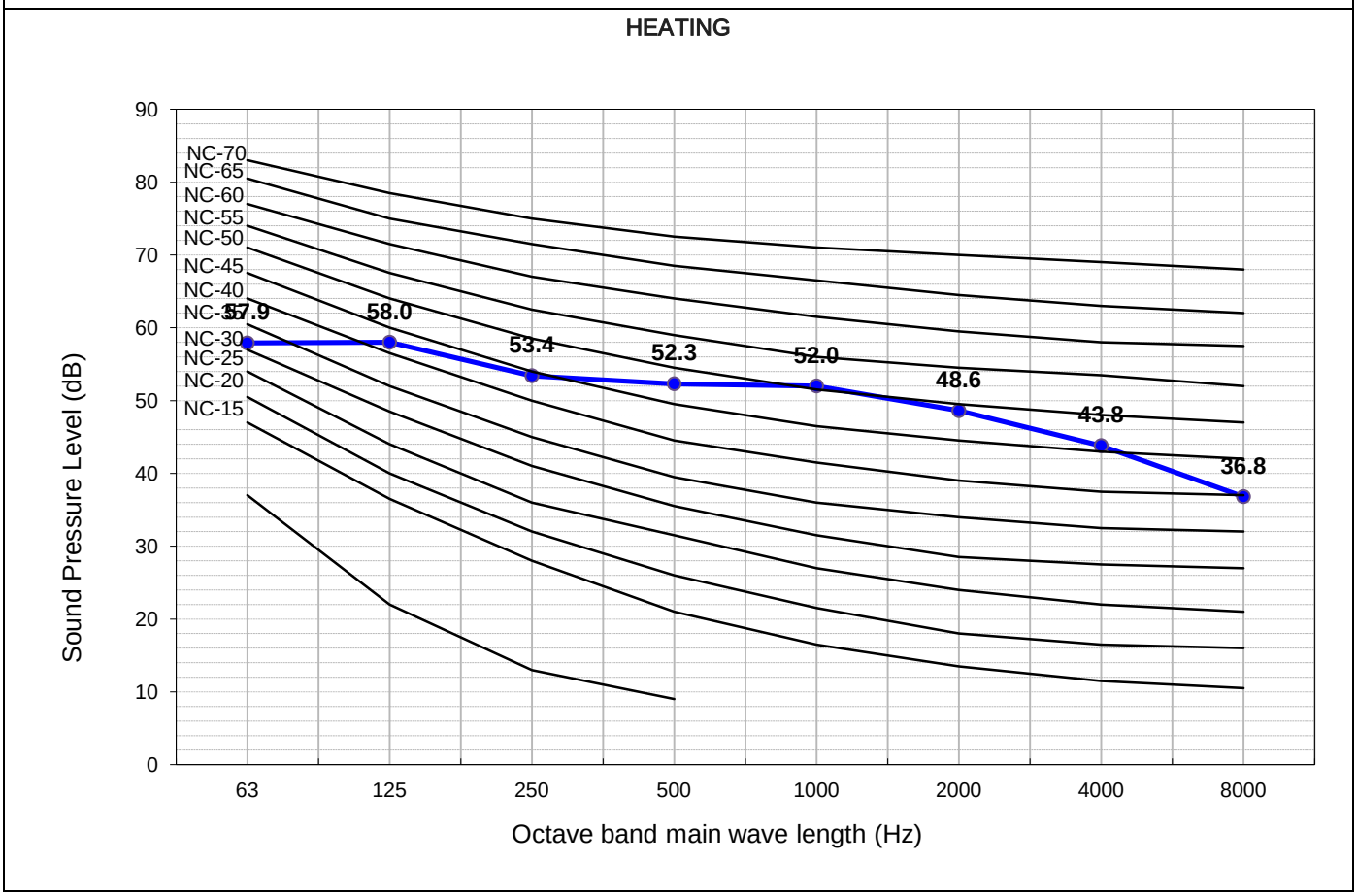

The Sound Pressure Level is based on the following conditions:

- *1 meter from the unit front surface and 1 meter from floor level*

The above data was measured in an anechoic chamber. Please take into consideration reflected sound of your specific site

5 WORKING RANGE

5.1. POWER SUPPLY

Working Voltage	207V ~ 253V
Voltage Imbalance	Within a 3% Deviation from Each Voltage at the Main Terminal of Outdoor Unit
Starting Voltage	Higher than 85% of the Rated Voltage

5.2. WORKING RANGE

Applicable models:

RAC-18WPB
RAC-25WPB
RAC-35WPB
RAC-50WPB

The temperature range is indicated in the following table.

Cooling

working range	min (°C)	max (°C)	rated (°C)
outdoor	-10	43	35
indoor	16	43	27

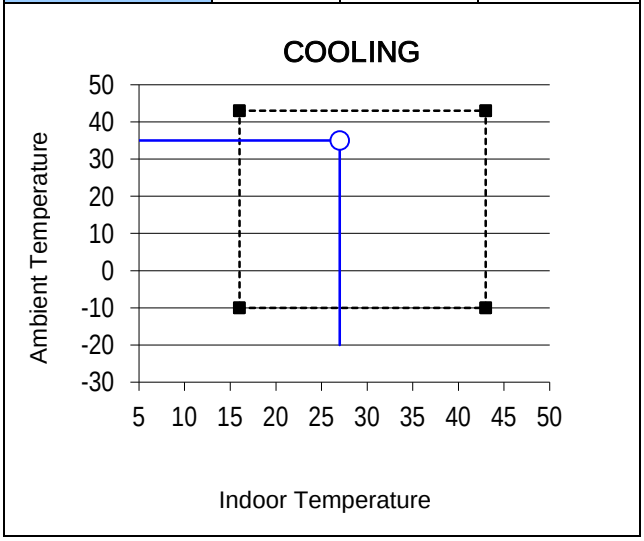

Heating

working range	min (°C)	max (°C)	rated (°C)
outdoor	-15	21	7
indoor	16	26	20

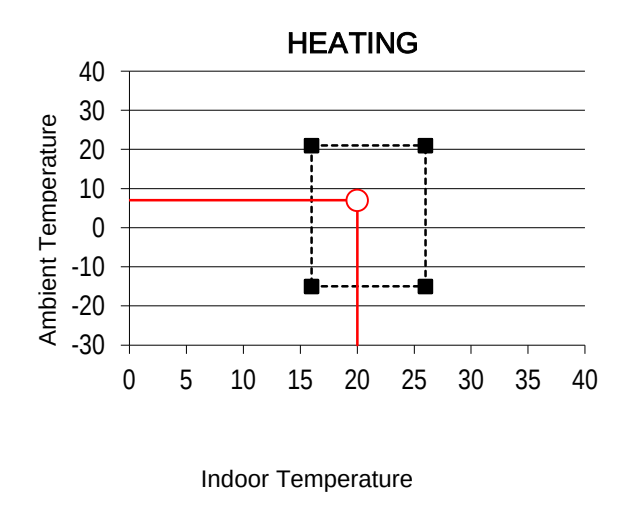

6 ELECTRICAL DATA

6.1. INDOOR UNIT

Model	Unit Main Power		Applicable Current		Indoor Fan Motor	
	VOL, PH, Hz	Fuse Rating (A)	STC	RNC	RNC	IPT
RAK-18RPB	230, 1, 50	3.15	(C) 3.34 (H) 3.49	(C) 4.39 (H) 4.22	0.67	30
RAK-25RPB	230, 1, 50	3.15	(C) 4.36 (H) 4.56	(C) 5.61 (H) 5.43	0.67	30
RAK-35RPB	230, 1, 50	3.15	(C) 5.27 (H) 5.51	(C) 6.35 (H) 7.39	0.67	30
RAK-50RPB	230, 1, 50	3.15	(C) 7.59 (H) 7.93	(C) 9.13 (H) 11.96	0.67	30

VOL: Rated Unit Power Supply Voltage (V)
Hz: Frequency (Hz)
STC: Starting Current (A)
RNC: Running Current (A)
PH: Phase (ϕ)
IPT: Input (W)

6.2. OUTDOOR UNIT

Model	Unit Main Power				Compressor Motor					
	VOL, PH, Hz	Fuse Rating (A)	Min (V)	Max (V)	Locked Rotor Ampere (A)	STC	Cooling Operation		Heating Operation	
							RNC	IPT	RNC	IPT
RAC-18WPB	230, 1, 50	15	207	253	-	3.49	4.39	550	4.22	580
RAC-25WPB	230, 1, 50	15	207	253	-	4.56	5.61	700	5.43	880
RAC-35WPB	230, 1, 50	15	207	253	-	5.51	6.35	1090	7.39	1100
RAC-50WPB	230, 1, 50	25	207	253	-	7.59	9.13	1560	11.96	1660

VOL: Rated Unit Power Supply Voltage (V)
HZ: Frequency (Hz)
STC: Starting Current (A)
RNC: Running Current (A)
PH: Phase (ϕ)
IPT: Input (W)

NOTE:

1. *The above compressor data is based on 100% capacity combination of indoor units at the rated operating frequency*
2. *This data is based on the same conditions as the nominal heating and cooling capacities.*
3. *The compressor started by an inverter, resulting in extremely low starting current.*

7 WIRING DIAGRAM

7.1. RAK-18RPB, RAK-25RPB, RAK-35RPB, RAK-50RPB

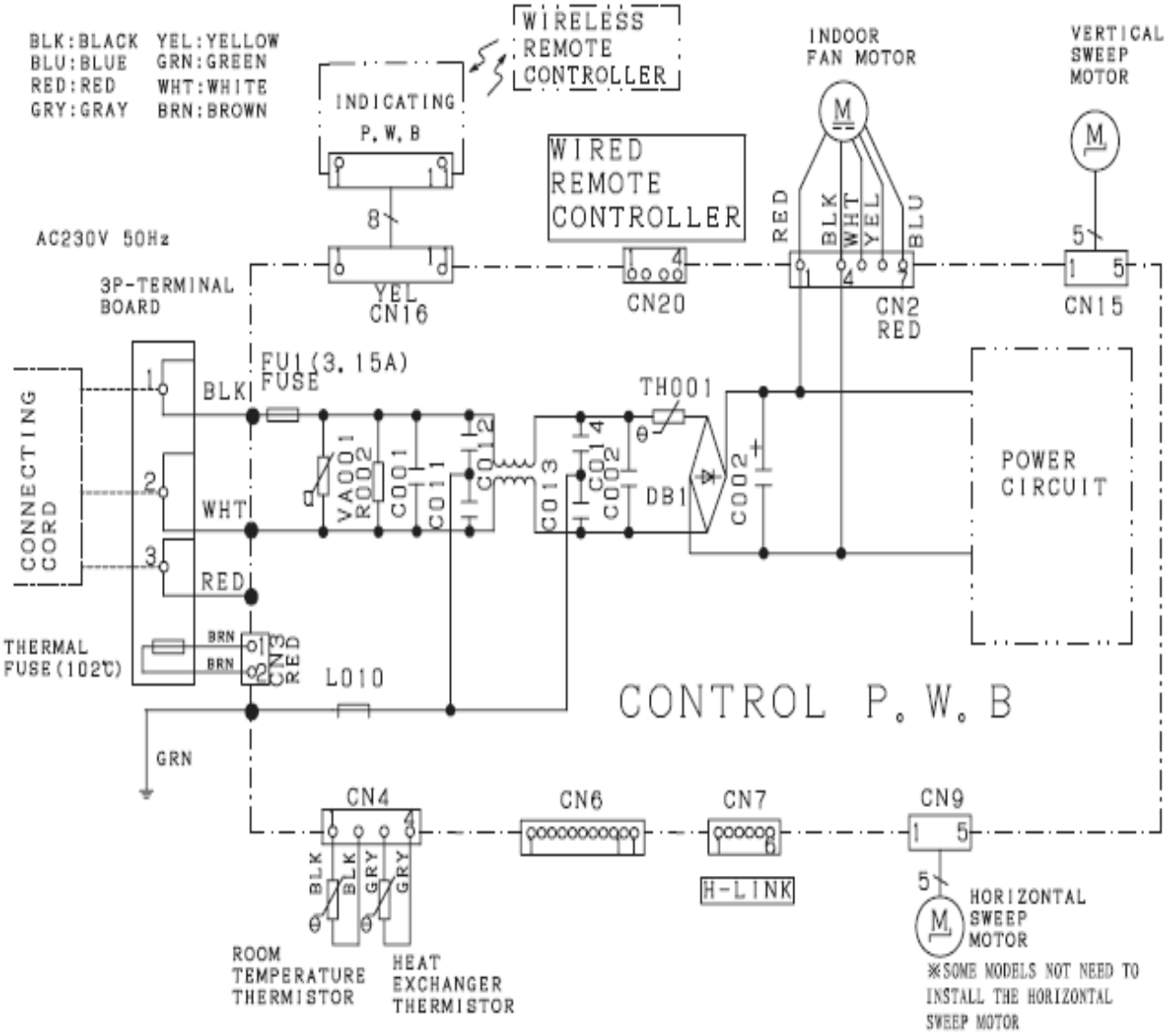

7.2. RAC-18WPB, RAC-25WPB, RAC-35WPB

RAC-18WPB, RAC-25WPB, RAC-35WPB

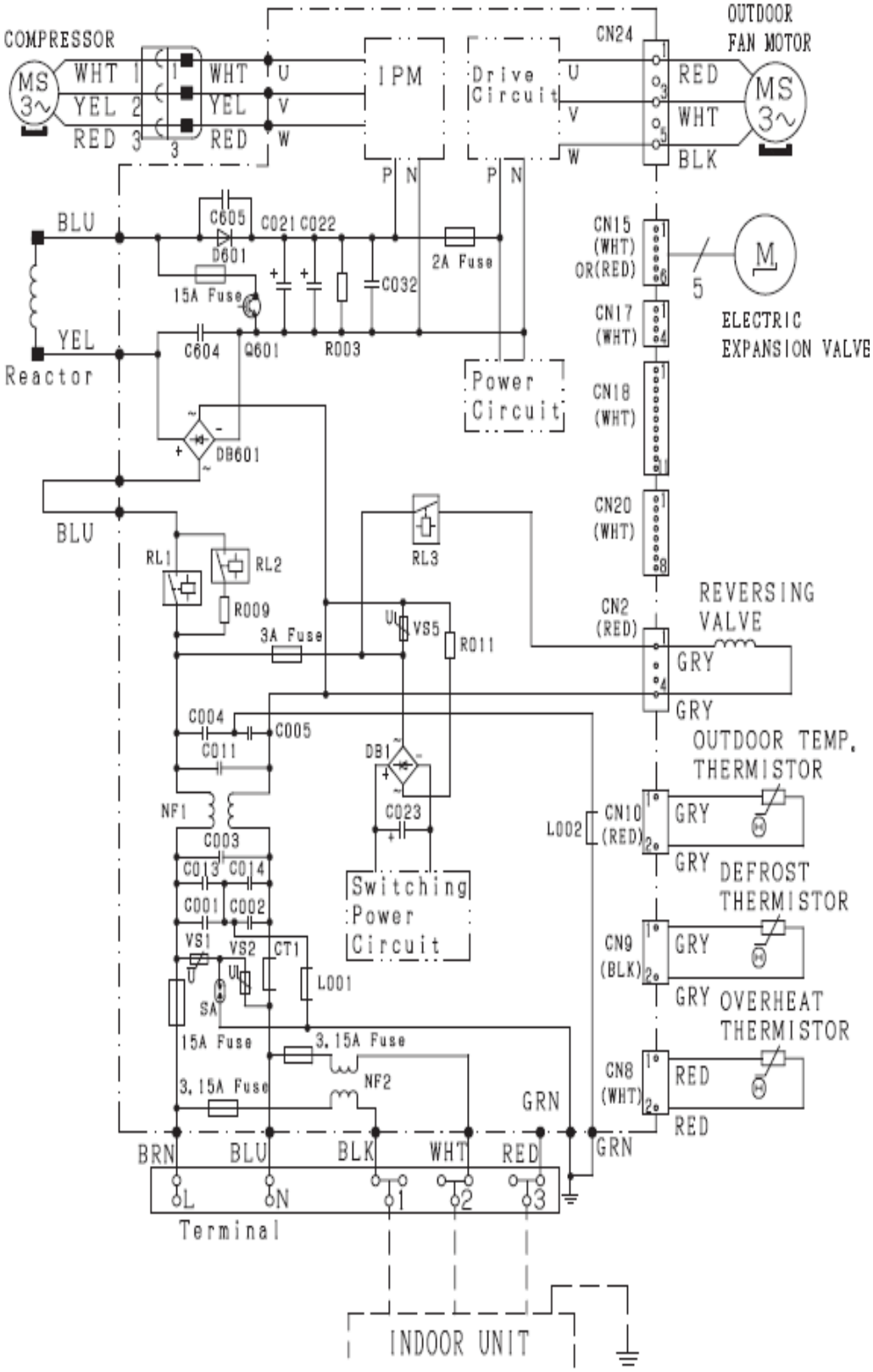

7.3. RAC-50WPB

RAC-50WPB

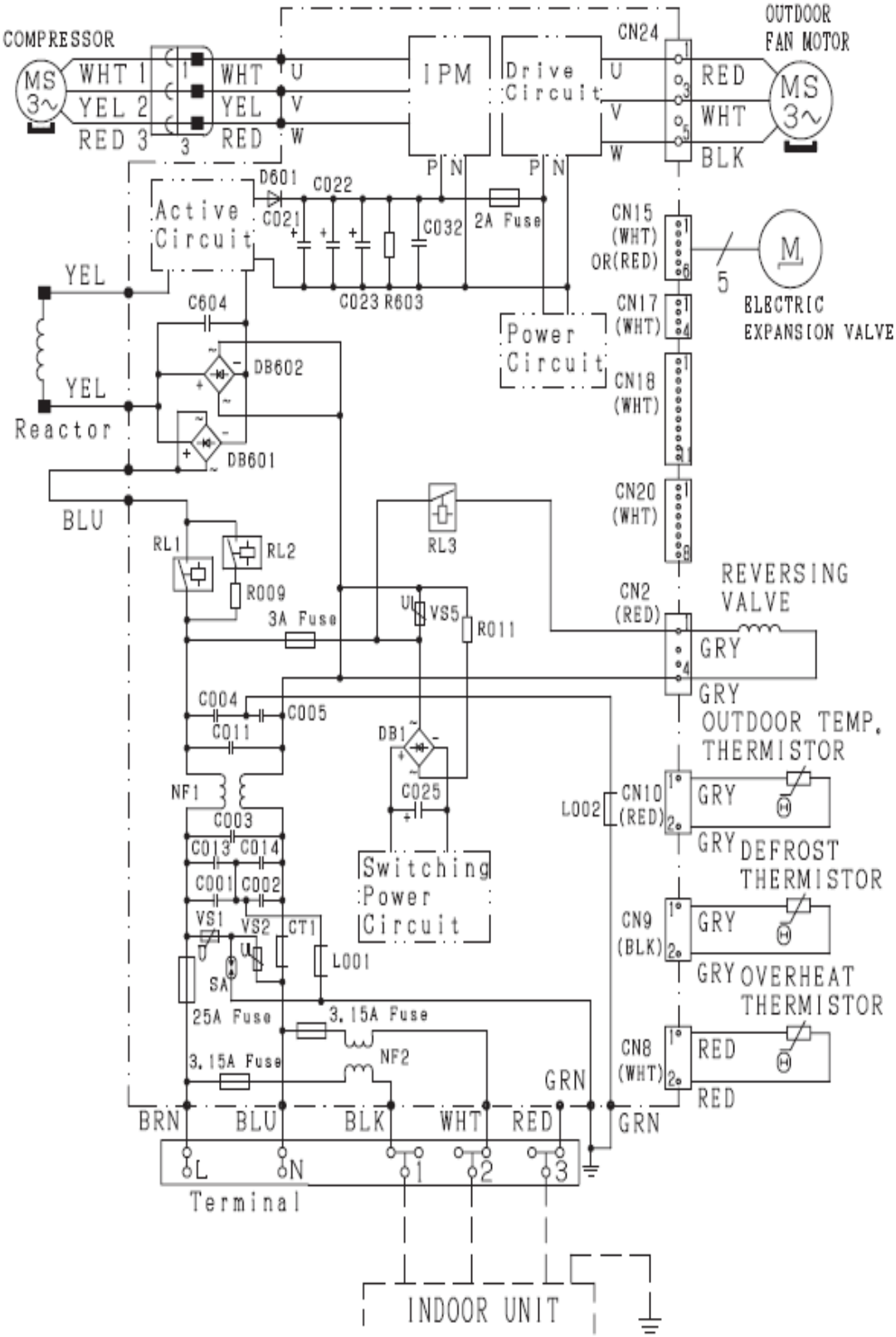

8 REFRIGERANT CYCLE

8.1. WALL TYPE: RAK-18RPB/25RPB / RAC-18WPB/25WPB

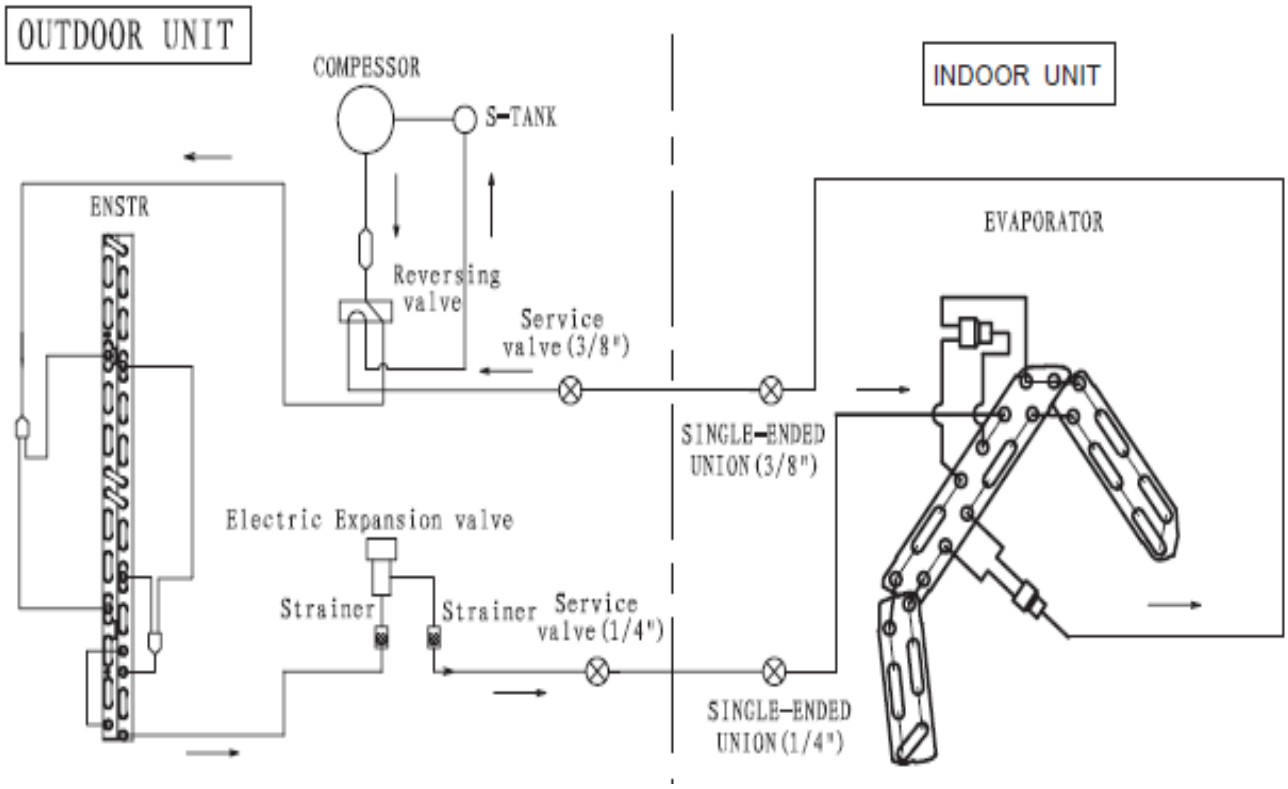

8.2. WALL TYPE: RAK-35RPB / RAC-35WPB

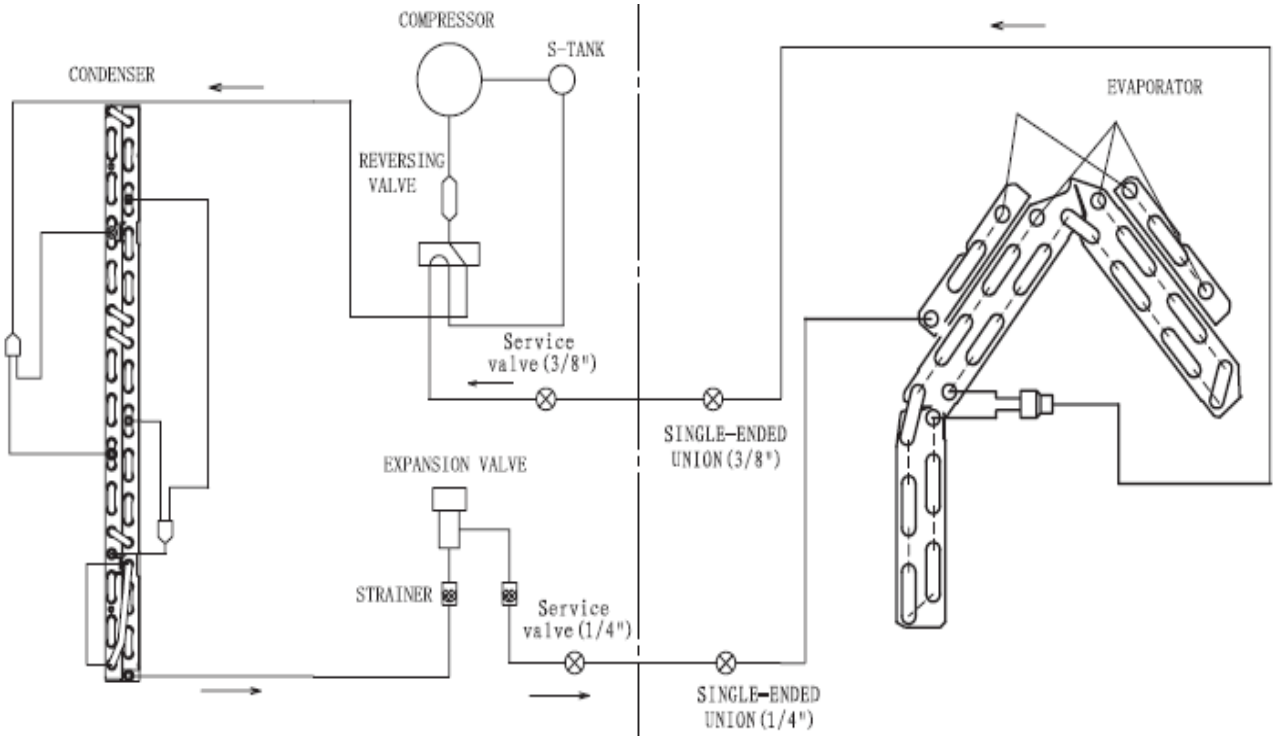

8.3. WALL TYPE: RAK-50RPB / RAC-50WPB

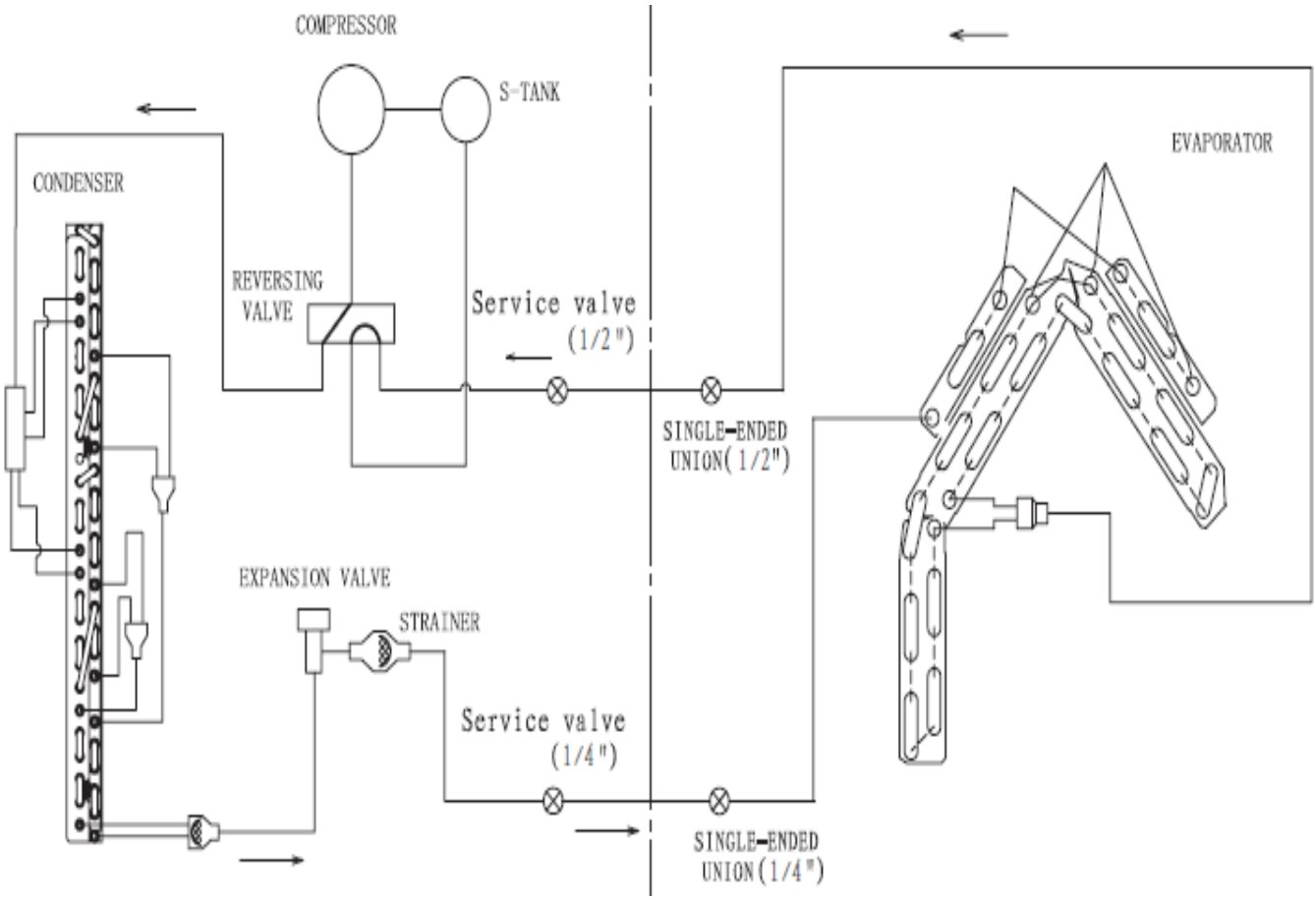

9 CONTROL AND FUNCTION

9.1. WIRELESS REMOTE CONTROL FUNCTION

REMOTE CONTROLLER TYPE

RAR-6N1	RAR-6N2
RAK-35RPB RAK-50RPB	RAK-18RPB RAK-25RPB

BUTTONS	FUNCTION
MODE	**MODE Selector** Use this button to select the operationg mode. Every time you press this button, the mode will change from (AUTO) → (HEAT) → (DEHUMIDIFY) → (COOL) and → (FAN) cyclically.
FAN	**FAN SPEED Selector Button** This determines the fan speed. Every time you press this button, the airflow rate will change from (AUTO) → (HIGH) → (MED) → (LOW) → (SILENT) (This button allows selection of optimal or preferred fan speed for each operation mode).
	START/STOP button Press this button to start operation. Press it again to stop operation.
ECO	**ECO button** Use this button to set the ECO mode.
	POWERFUL button Use this button to set the POWERFUL mode.
	SILENT button Use this button to set the SILENT mode.
	INFO button 1) Press this button to display temperature for 10 seconds. 2) Press this button to check monthly power consumption. 3) Press this button to recieve the current calendar and clock.
	ECO SLEEP TIMER button Use this button to set the ECO sleep timer.
	AUTO SWING (Vertical) button Controls the angle of the horizontal air deflector.
	AUTO SWING (Horizontal) button Controls the angle of the vertical air deflector.
10°C	**LEAVE HOME button** Prevent the room temperature from falling too much by setting temperature 10°C~16°C when no one is at home
	ONE TOUCH CLEAN button Drying indoor heat exchanger after cooling operation to prevent mildew.
WEEKLY TIMER buttons	
OFF TIMER ON	**ON/OFF TIMER button** The device will turn on (off) and off (on) at the designated time.
TIME	**TIME button** Press the button to set starting time of the program
OK	**OK button** Press the button to save the program. The button shall be pressed everytime after finishing a program setting.
DELETE	**DELETE button** 1) Press the button to delete the selected program. 2) Press the button for about 10 seconds by directing the remote controller towards the indoor unit while Mode A or B display blinks, programs for Mode A or B will be deleted both from the indoor unit and the remote controller after the beep sound from the indoor unit.
Mon-Sun	**DAY button** Select the desired day of the week.
1 – 6	**PROGRAM NO. button** Press this button to select a program number.
CANCEL	**CANCEL** 1) Press the button to cancel the current setting process on the screen. 2) Press the button by directing the remote controller towards the indoor unit, then weekly timer setting will be canceled from indoor unit after the beep sound from the indoor unit. The program setting remains in the remote controller.
SEND	**SEND button** Press the button for about 3 seconds by directing the remote controller towards the indoor unit after finishing the program setting. Timer lamp on the indoor unit will blink rapidly and after the beep soung from indoor unit, TIMER lamp will light up.
CLOCK	**CLOCK button** Press the button to set calendar and clock.
WEEKLY (A/B)	**WEEKLY TIMER MODE button** 1) Select Mode A or Mode B. 2 modes can be set and stored as a weekly timer. 2) By pressing the button longer than 3 seconds, program setting screen will appear.

9.2. AUTO CHANGEOVER

COOLING/HEATING mode is decided by the room temperature.

A. COOLING/HEATING mode is decided during the **initial startup** of Automatic Operation
Initial startup of Automatic Operation means the following either condition:
- Unit start up in Automatic Operation
- Automatic Operation mode is pressed while the unit is running in manual mode

Startup room temperature	COOL / HEAT
>= Remote controller setting temperature	Unit runs in COOLING mode
< Remote controller setting temperature	Unit runs in HEATING mode

B. COOLING/HEATING mode is decided **in intervals after the initial startup** of Automatic Operation (also known as Auto Changeover function)

Intervals	Duration
1st interval	10 minutes
2nd interval	15 minutes
Subsequent interval	Every 55 minutes

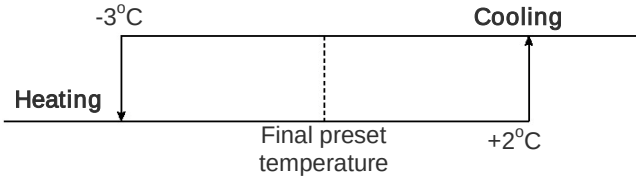

9.3. SHIFT VALUE

1. Press and hold (START/STOP) button and (ON) button.
2. Press [RESET] button on the same time. Release [RESET] button only, then release (START/STOP) and (ON) button once Screen 1 appears.

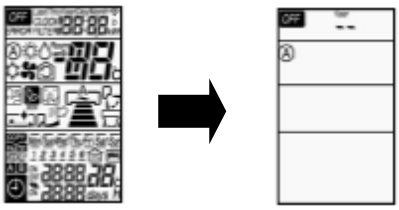

Screen 1 Screen 2

3. Press the (MODE) button to display fan mode (Screen 3).

Screen 3

4. Press (START/STOP) and Screen 4 appear.

Screen 4

5. Select (FAN SPEED) button to choose Heating Shift or Cooling Shift Mode (Screen 5).

By setting fan speed to HIGH or MED , it will go to Cooling Shift mode.
By setting fan speed to LOW or SILENT , it will go to Heating Shift mode.

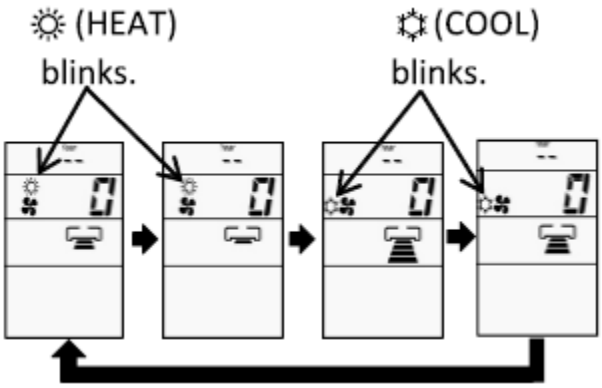

Screen 5

6. Press the Temperature button (or) to adjust the shift value.

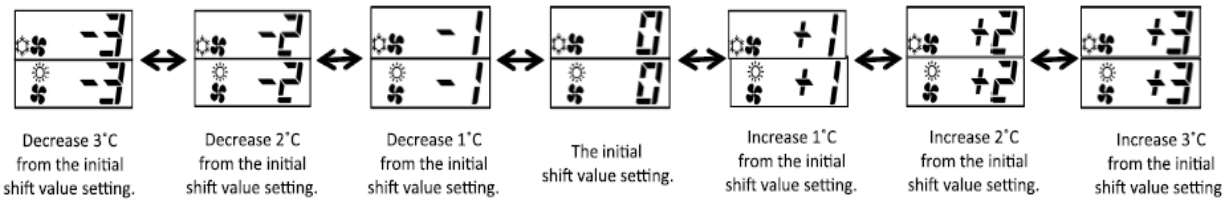

NOTE:
1. There are total of 7 shift values ranging from -3 to 3.
2. The displayed shift value, (HEAT) and (COOL) symbol on the remote controller display will be disappear after 10 seconds
3. The changed shift value will remain unchanged after turned off the power.
4. If “0” is displayed on the remote controller display, it indicates the shift value is now at the initial setting.

9.4. OPERATION LOCK

1. HEATING MODE

a) Press and hold ECO (ECO) and POWERFUL (POWERFUL) buttons, press RESET (RESET) button on the same time. Release RESET (RESET) button only when Screen 1 appear, then release ECO (ECO) button and POWERFUL (POWERFUL) button.

Screen 1

b) Wait until only Screen 2 appear.

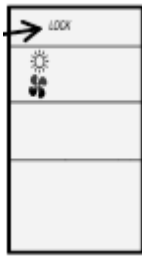

Screen 2

c) The heating mode operation is locked.

d) To unlock HEATING mode, repeat step (a). After all operations mode symbols displayed for 10 seconds, the operation mode symbol before cancellation will be display. The heating mode operation is unlocked.

2. COOLING AND DEHUMIDIFYING MODE

a) Press and hold ECO (ECO) and SILENT (SILENT) buttons for at least 5 seconds when the remote controller is OFF.

b) Wait until only and displayed on the screen. The cooling and dehumidifying modes operation is locked.

c) To unlock HEATING mode, repeat step (a). After all operations mode symbols displayed for 10 seconds, the operation mode symbol before cancellation will be display. The cooling and dehumidifying mode operation is unlocked.

9.5. SETTING THE PREVENTION OF MUTUAL INTERFERENCE

1. Please ensure the other indoor unit is OFF.
2. Press 1-6 (PROGRAM NO.) button, TIMER ON (ON TIMER) button and RESET (RESET) button simultaneously. The remote controller will display Screen 1 and followed by Screen 2. The indoor unit beeps to indicate that it has just received the signal from remote controller.

Screen 1

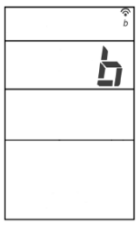

Screen 2

NOTE:
1. If indoor unit still not receive the correct signal from the correct remote controller, setting shall be made again. By setting again for the 2nd time, the signal address will change from B to A, then repeat again for the 3rd time.

9.6. INTERMITTENT FAN SPEED SETTING

The intermittent fan control during thermo off in Heating Mode can be changed by the remote controller.
(This procedure should be done only by service personnel.)
It is possible to select from 3 patterns.

PROCEDURE

1. Press [START/STOP] button, [Mon-Sun] button and press [RESET] button simultaneously. Release [RESET] button only and make sure that all marks on the remote controller display are indicated, then release [START/STOP] button and [Mon-Sun] button. Remote controller now enters "Intermittent Fan Control Change Mode".

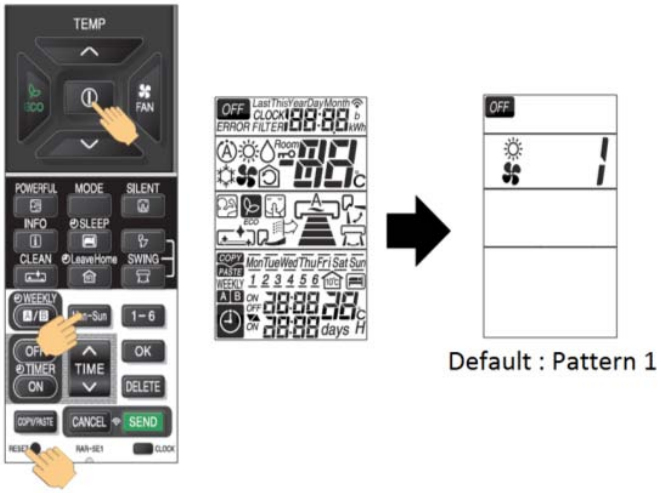

2. Press [ROOM TEMPERATURE setting] [∧(UP)]/[V(DOWN)] buttons.
(The intermittent pattern changed with indoor unit beep sound.)

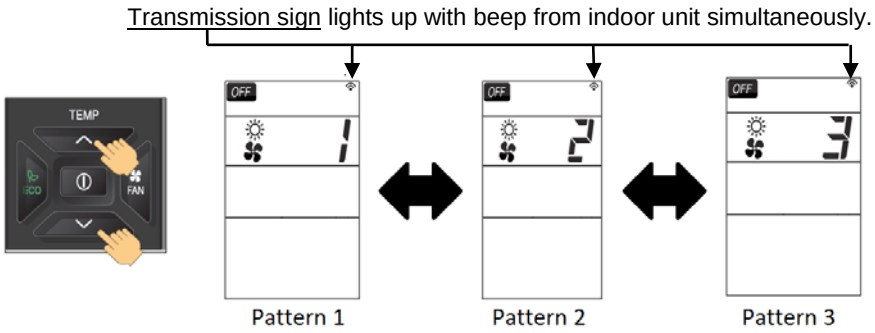

	Pattern 1	Pattern 2	Pattern 3
Single Model	Continuous	30sec ON / 210sec OFF repeatedly	50sec ON / 190sec OFF repeatedly
Multi Model	30sec ON / 210sec OFF repeatedly	50sec ON / 190sec OFF repeatedly	Continuous

NOTE :
(1) The indication of the selected intermittent pattern will disappear after 10 seconds.
(2) The selected intermittent pattern will remain unchanged after the unit is turned off.

9.7. FAN SPEED SETTING IN THERMO OFF IN COOLING

The fan speed in Cooling Mode during thermo off can be changed by the remote controller.
(This procedure shall be implemented strictly by service personnel only.)
It is possible to return it to the default setting.

PROCEDURE

Press [POWERFUL] button and [TIME ∧(UP)] button simultaneously for about 5 seconds when the remote controller is OFF.

Transmission sign lights up with beep from indoor unit simultaneously.

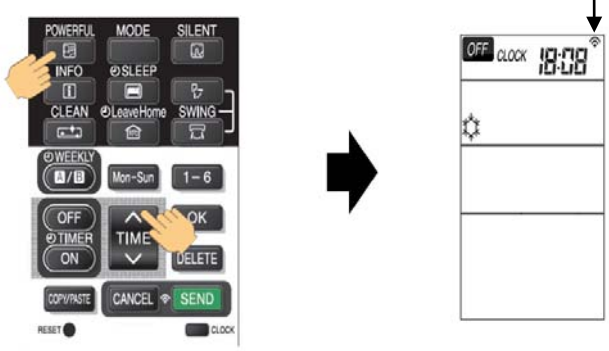

Beep sound pattern : 1) Default setting : Short beep
2) Changed setting : Double beep

	Fan speed during thermo off
Default Setting	Ultra low
Changed Setting	Set fan speed (When auto fan speed is set, the fan speed is low)

NOTE :
(1) The selected fan speed will remain unchanged after the unit is turned off.
(2) If Timer reservation has been set, it will be canceled.
(3) During time setting and timer setting, this operation cannot be set.

9.8. ERROR CODE INFORMATION

1. In case failure occurs to the air conditioner, by pressing INFO (INFO) button, an error code will be displayed.
2. Direct the remote controller towards the receiver of indoor unit (within 2 meters in from of indoor unit) and press INFO (INFO) button.
3. Wait for 2 seconds for signal transmission and the error code will be displayed.

	TIMER LAMP BLINKING	LED301 BLINKING	CODE	MEANING
INDOOR	-	-	000 00	Normal
	1 time		001 00	Refrigerant cycle fault
	2 times	-	-	Outdoor unit is under forced operation
	3 times	9 times	003 00	Communication error between indoor and outdoor units
	9 times	-	009 00	Indoor thermistor
	10 times	-	010 00	Abnormal rotating numbers
	13 times	-	013 00	IC401 data reading error
OUTDOOR	4 times	2 times	002 01	Peak current cut
	4 times	3 times	003 01	Compressor abnormal low speed rotation
	4 times	4 times	004 01	Compressor switching failure
	4 times	5 times	005 01	Overload lower limit cut
	4 times	6 times	006 01	OH thermistor temperature rise
	4 times	7 times	007 01	Abnormal outdoor thermistor
	4 times	8 times	008 01	Acceleration defective
	4 times	9 times	009 01	Communication error
	4 times	10 times	010 01	Abnormal power source
	4 times	11 times	011 01	Fan stop for strong wind
	4 times	12 times	012 01	Fan motor fault
	4 times	13 times	013 01	EEPROM reading error
	4 times	14 times	014 01	Active converter defective
	4 times	15 times	015 01	Abnormal PWB circuit

	TIMER LAMP BLINKING	LD301 Lit LD302 BLINKING	CODE	MEANING
OUTDOOR	4 times	1 times	071 01	Overheat thermostat
	4 times	2 times	072 01	Defrost thermostat
	4 times	3 times	073 01	Outdoor temperature thermostat
	4 times	4 times	074 01	Narrow pipe thermostat (indoor 1)
	4 times	5 times	075 01	Wide pipe thermostat (indoor 1)
	4 times	6 times	076 01	Narrow pipe thermostat (indoor 2)
	4 times	7 times	077 01	Wide pipe thermostat (indoor 2)
	4 times	8 times	078 01	Narrow pipe thermostat (indoor 3)
	4 times	9 times	079 01	Wide pipe thermostat (indoor 3)
	4 times	10 times	080 01	Narrow pipe thermostat (indoor 4)
	4 times	11 times	081 01	Wide pipe thermostat (indoor 4)
	4 times	12 times	082 01	Narrow pipe thermostat (indoor 5)
	4 times	13 times	083 01	Wide pipe thermostat (indoor 5)

9.9. ADDITIONAL FUNCTION VIA DIP-SWITCH SETTINGS

A new DIP Switch is available on the PWBs of the indoor unit that provide additional functions via the settings on the switches.

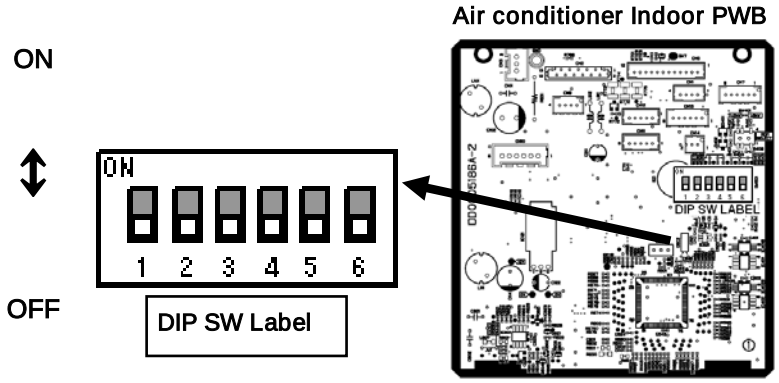

Pin No.	Function	Switch Position / Setting					
1	AUTO RESTART function	OFF	Enable	ON	Disable		
2	DRY CONTACT function	OFF	Disable	ON	Enable		
3	DRY CONTACT Logic Select	OFF	HI Input Active	ON	LO Input Active		
4	HEATING / COOLING ONLY MODE SELECT	OFF	NORMAL (HEAT AND COOL)	OFF	HEATING ONLY	ON	COOLING ONLY
5		OFF		ON		OFF	
6	REMOCON ID SELECT ❖1	OFF	SELECT ID A	ON	SELECT ID B		

NOTE:

❖1 The setting of pin no. 6 is disabled for this model. Please refer to **9.5 SETTING THE PREVENTION OF MUTUAL INTERFERENCE**.

9.9.1. AUTO RESTART FUNCTION

The AUTO RESTART function can be enabled or disabled by setting Pin No. 1 on the DIP SWITCH above to the ON or OFF position accordingly.

9.9.2. HEATING/COOLING ONLY MODE SELECTION

When this function is enabled, the operation mode could be locked to either Heating Only (Heating or Fan) or Cooling Only (Cooling, Fan or Dehumidifying) by setting the Pin No. 4 and 5 accordingly.

LOCKED MODE	REMARKS
HEATING ONLY	Unit will not enter into Cooling mode although cooling mode is selected using the remote controller.
COOLING ONLY	Unit will not enter into Heating mode although heating mode is selected using the remote controller.

10 OPTION LIST

10.1. WIRED REMOTE CONTROL – SPX-RCDB

RAR-5G2 (SPX-RCDB)

BUTTONS	FUNCTION
	MODE Selector Use this button to select the operationg mode. Every time you press this button, the mode will change from (AUTO) → (HEAT) → (DEHUMIDIFY) → (COOL) and → (FAN) cyclically.
FAN	**FAN SPEED Selector Button** This determines the fan speed. Every time you press this button, the airflow rate will change from (AUTO) → (HIGH) → (MED) → (LOW) → (SILENT) (This button allows selection of optimal or preferred fan speed for each operation mode).
	ON/OFF button Press this button to start operation. Press it again to stop operation.
	SLEEP button Use this button to set the SLEEP timer.
SET	**SET button** Timer setting reservation.
OFF	**OFF button** Select the turn OFF timer.
ON	**ON button** Select the turn ON timer.
CANCEL	**CANCEL button** Cancel timer reservation.
	AUTO SWING (Vertical) button Controls the angle of the horizontal air deflector.
	ROOM TEMPERATURE setting button Value will change quicke when keep pressing.

10.1.1. SHIFT VALUE

1. Press and hold (ON/OFF) button and (ON TIMER) button at the same time while giving a single press on the RESET button until remote controller now enter 'Shift value change mode'.
2. Press (ON/OFF) button so that the display indicates (FAN) speed.
3. Select (FAN SPEED) button to choose Heating Shift or Cooling Shift Mode.

   By setting fan speed to HIGH or MED , it will go to Cooling Shift mode.
   By setting fan speed to LOW or SILENT , it will go to Heating Shift mode.

4. Press (ROOM TEMPERATURE) button to change the shift value (-3°C ~ 0 ~ 3°C).
5. Press (ON/OFF) button to end 'Shift value setting mode'.

NOTE:
1. There are total of 7 shift values ranging from -3 to 3.
2. The changed shift value will remain unchanged after turned off the power.

10.1.2. ERROR CODE INFORMATION

1. In case failure occurs to the air conditioner, the error code will constantly appear on the wired remote controller display.

	TIMER LAMP BLINKING	LD301 BLINKING	CODE	MEANING
INDOOR	-	-	-	Normal
	1 time		01 O	Refrigerant cycle fault
	2 times	-	-	Outdoor unit is under forced operation
	3 times	9 times	03 O	Communication error between indoor and outdoor units
	9 times	-	09 O	Indoor thermistor
	10 times	-	10 O	Abnormal rotating numbers
	13 times	-	13 O	IC401 data reading error
OUTDOOR	4 times	2 times	02 I	Peak current cut
	4 times	3 times	03 I	Compressor abnormal low speed rotation
	4 times	4 times	04 I	Compressor switching failure
	4 times	5 times	05 I	Overload lower limit cut

	TIMER LAMP BLINKING	LD301 BLINKING	CODE	MEANING
OUTDOOR	4 times	6 times	06 I	OH thermistor temperature rise
	4 times	7 times	07 I	Abnormal outdoor thermistor
	4 times	8 times	08 I	Accelaration defective
	4 times	9 times	09 I	Communication error
	4 times	10 times	10 I	Abnormal power source
	4 times	11 times	11 I	Fan stop for strong wind
	4 times	12 times	12 I	Fan motor fault
	4 times	13 times	13 I	EEPROM reading error
	4 times	14 times	14 I	Active converter defective
	4 times	15 times	15 I	Abnormal PWB circuit
		LD301 Lit LD302 BLINKING		
	4 times	1 times	71 I	Overheat thermostat
	4 times	2 times	72 I	Defrost thermostat

	TIMER LAMP BLINKING	LD301 Lit LD302 BLINKING	CODE	MEANING
OUTDOOR	4 times	3 times	73 I	Outdoor temperature thermostat
	4 times	4 times	74 I	Narrow pipe thermostat (indoor 1)
	4 times	5 times	75 I	Wide pipe thermostat (indoor 1)
	4 times	6 times	76 I	Narrow pipe thermostat (indoor 2)
	4 times	7 times	77 I	Wide pipe thermostat (indoor 2)
	4 times	8 times	78 I	Narrow pipe thermostat (indoor 3)
	4 times	9 times	79 I	Wide pipe thermostat (indoor 3)
	4 times	10 times	80 I	Narrow pipe thermostat (indoor 4)
	4 times	11 times	81 I	Wide pipe thermostat (indoor 4)
	4 times	12 times	82 I	Narrow pipe thermostat (indoor 5)
	4 times	13 times	83 I	Wide pipe thermostat (indoor 5)

10.2. H-LINK ADAPTOR – PSC 6RAD

10.2.1. SAFETY SUMMARY

DANGER:

– *DO NOT pour water into the remote control switch (hereafter called "controller"). This product is equipped with electrical parts. This will cause serious electrical shock.*

WARNING:

– *DO NOT perform installation work and electrical wiring connection by yourself. Contact your distributor or dealer of HITACHI and ask then for installation work and electrical wiring by service person. The specified cable should be used to connect (i) room air conditioner and adaptor, and (ii) controller and adaptor.*

CAUTION:

– *DO NOT install the indoor unit, outdoor unit, controller and cable as such places as:*
  – *where there is oil vapor and dispersion of oil*
  – *where there is sulfuric environment (near the hot springs)*
  – *where there is a flammable gas*
  – *where there is salty environment (near the sea)*

– *DO NOT install the indoor unit, outdoor unit, controller and cable within approximately 3 meters from strong electromagnetic wave radiators, such as medical equipment. In case that the controller is installed in a place where there is electromagnetic wave direct-radiation, shield the controller and cables by covering with the steel box and running the cable through the metal conduit tube.*

– *In case that there is electric noise at the power source for the indoor unit, provide a noise filter.*

10.2.2. INSTALLATION WORK

■ **Before installation**

Check the contents and the number of the accessories in the packing.

Adaptor	With two 1.8m cables
1 piece of cover for hiding the covering	Attached 2 sided tapes 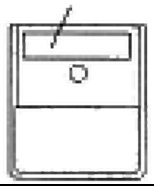
Two-sided tape for attaching to Adaptor	110x40x3mm
2 connectors for H-Link connection	
2 tapping screws for attaching to wall	ϕ3.0 x 10mm
2 screws for attaching to wooden wall	ϕ3.1 x 16mm

1) RAC adaptor can be installed to the wall as well as on the air conditioner itself
2) Install RAC adaptor in the vertical surface as shown below.

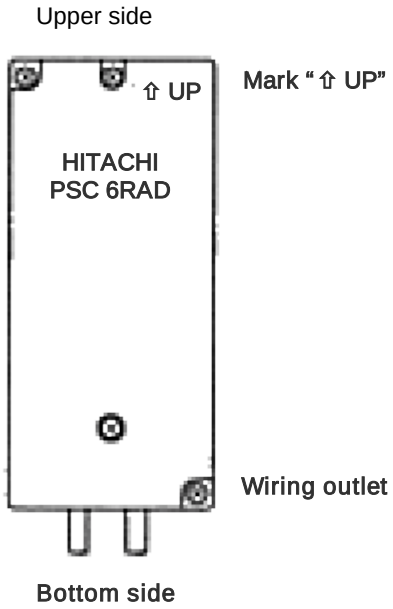

3) Installation procedure
   a) When installing to the wall.
      i) Fix the adaptor with 2 screws. Tapping screw is for metal surface, and other screw is for wooden surface.

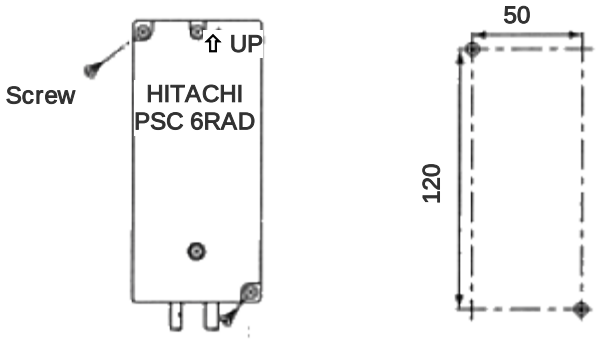

      ii) When using the cover
      It can be installed at the right and left side of room air conditioner. Fix the cover and RAC adaptor with the two-sided tape (accessory).

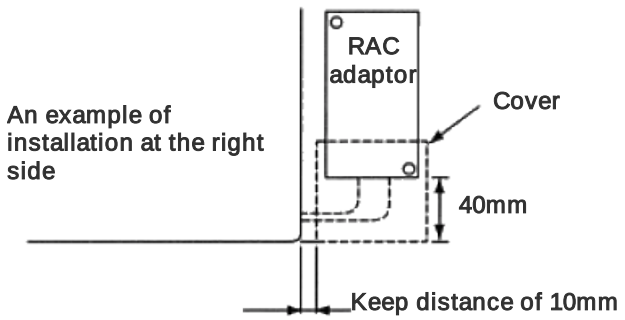

b) When installing on the room air-conditioner
In case that it cannot be installed to the wall due to the space or material problem, install the RAC adaptor with the two-sided tape (accessory) on the room air-conditioner.
   i) Confirm if the piping cover of the unit can be removed when performing the service maintenance, and then fix the RAC adaptor in the side of room air-conditioner with two-sided tape. (Available at the right as well as left side)
   ii) Clean the surface to be installed with a dry cloth.

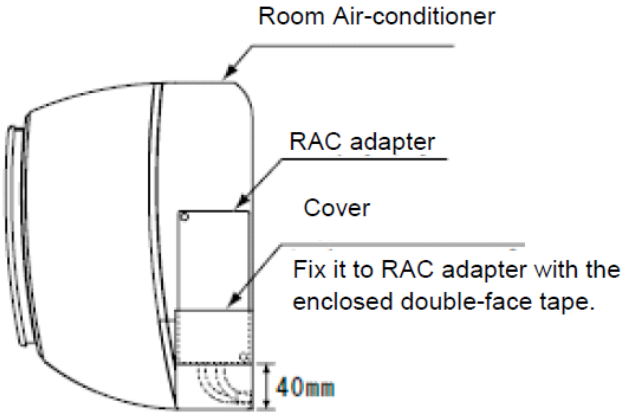

NOTE:

- *Consider the following points since the adhesiveness changes according to the environmental conditions (temperature, humidity etc)*
- *The adhesiveness is decreased when there is humidity or oil.*
- *Warm the adhesive part and installation place of the two-sided tape to avoid the decrease of the adhesiveness in case the ambient temperature is low.*
- *DO NOT touch the adhesive part by fingers nor re-attach it many times. The adhesiveness has decreased and the RAC adaptor may fall off.*
- *DO NOT apply any force within 24 hours after installation.*

10.2.3. ELECTRICAL WIRING

■ System configuration

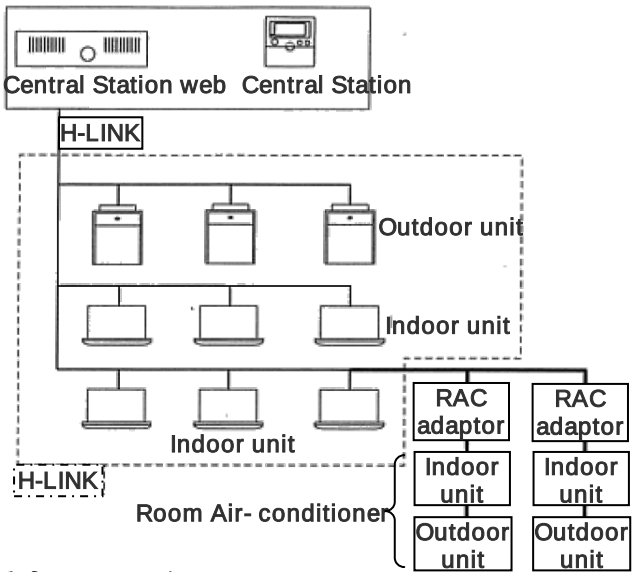

CAUTION:

- *Turn OFF the power supply of the room air-conditioner of the central control device when performing the wiring work*
- *DO NOT run all the H-LINK cable or power supply cable along the other signal cable, or malfunction may occur due to the noise, etc. If it is required to run along the other transmission cable, separate the cable more than 30cm, or run the cable through the metal tube and earth the tube.*
- *Follow local codes and regulations when performing electrical wiring and earth wiring.*
- *Transmissions cable used in H-LINK shall be 2 cores cable (0.7mm^2 to 1.25mm^2 for model: VCTF, VCT, CVV, MVVX, CVVX, VVR, VVF) or 2 cores twisted pair cable (model: KPEV, KPEV-Spec). Total length of cable shall be below 1000mm.*
- *DO NOT use wire with more than 3 cores.*

■ Internal components and Wiring connections

Check the contents and the number of the accessories in the packing.

- Access
  Open the cover by removing the ① and ② screws.

- Wiring Connection
  Connection with Room Air-Conditioner
  i) Remove the front cover of the room air-conditioner and the cover of electrical box.
  ii) The cable attached with the connector of the RAC adaptor shall be connected with the connector of indoor PCB

iii) Install the electrical box cover paying attention not to clamp the cable. Read the installation manual of each room air-conditioner for confirming how to connect and how to assemble the cable of the RAC adaptor.

CAUTION:

– *Disconnect the power plug before performing this work*

– *Turn OFF the break power source in case the power is supplied from the outdoor unit.*

- Connection of Transmission Cable

H-LINK transmission cable connecting to RAC adaptor shall be connected to H-LINK.

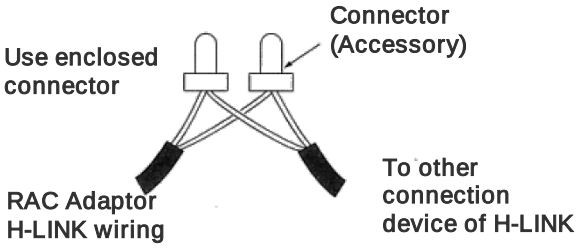

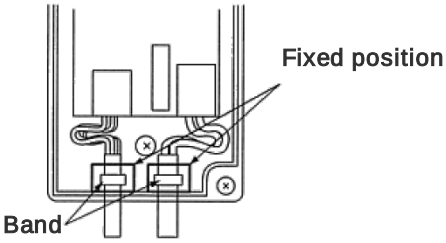

CAUTION:

– *DO NOT connect incorrect wiring. It may cause the failure of the RAC Adaptor. Especially pay attention not to apply high voltage e.g. AC400/230V.*

– *DO NOT perform the wiring work while power to the central station or the RAC Adaptor is still being supplied. It may cause malfunction. Turn OFF devices when performing the wiring work.*

– *The RAC Adaptor side cable should not overload to the connector.*

– *DO NOT clamp the cable when attaching the RAC adaptor cover.*

– *Band should not be loose and in fixed position.*

10.2.4. DIP SWITCH SETTING

1) Switch OFF the power of room air conditioner before setting the DIP switch. If the power is ON, the settings are INVALID.
2) The position of the DIP switch is shown below.

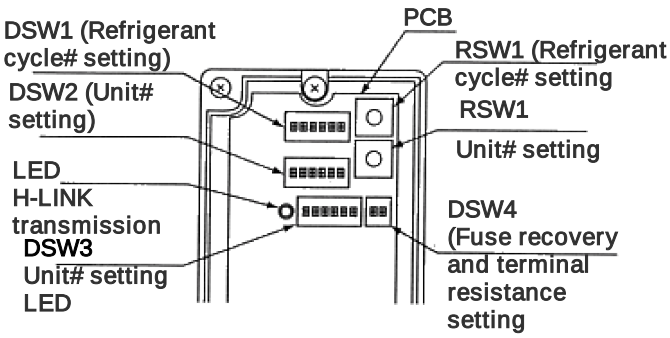

CAUTION:

– *DO NOT turn ON various pins of DSW1 and DSW2*

3) Set the refrigerant cycle# by RSW1 and DSW1

DSW1 (Ten digit)	RSW1 (Last digit)
	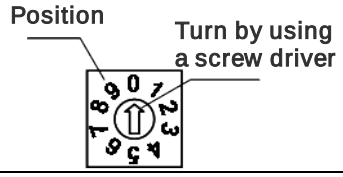
DSW1 and RSW1 are set “0” before shipment. Up to 15 cycles can be set.	
E.g. Setting in Ref No. 5 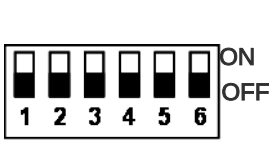 No. 1 pin is OFF	The position is Set 5

4) Set the unit No. by RSW2 and DSW2

DSW2 (Ten digit)	RSW2 (Last digit)
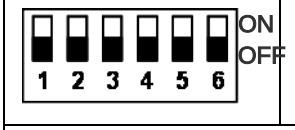	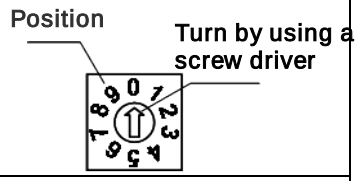
DSW2 and RSW3 are set “0” before shipment. Up to 15 cycles can be set.	
E.g. Setting in Unit No. 15 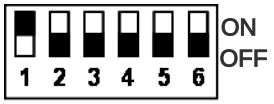 No. 1 pin is OFF	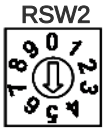 The position is Set 5

5) Slave unit.

In case of setting various RAC adaptors in the same refrigerant cycle, set the RAC adaptor with smallest Unit# as a master unit. In case of setting only one RAC adaptor in a refrigerant system, this adaptor should be a master unit. Set this procedure by DSW3.

Master Unit setting	Setting before shipping (slave unit setting)
ON ↑ 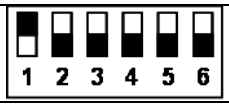	ON ↑ 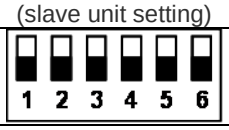

●: Master Unit setting

○: Setting before Shipping (Slave Unit setting)

Indoor Unit#

Refrigerant Unit#

	0	1	2	3	4	5	6	7		
0	●	○	○	○	○					
1			●	○	○					
2				●	○	○	○	○		
3		●								
4										

CAUTION:

– *DO NOT set various main adaptors in the same refrigerant cycle.*

6) Procedure when applying 200V voltage to H-LINK wiring incorrectly.

In case of applying 200V voltage to H-LINK wiring incorrectly, the fuse installed in a transmission circuit on PCB will blow out. In this case, reconnect the wiring correctly and turn ON No. 2 pin of DSW4 on PCB. The transmission circuit can be recovered. (If applying this error again, the transmission circuit can not be recovered)

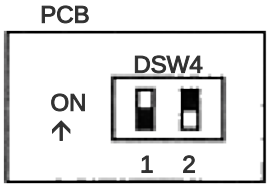

Turn ON No.2 pin of DSW4

7) Terminating resistance is set in whole H-LINK system.
   a) If H-LINK connecting devices like package air-conditioner are connected besides the RAC Adaptor, set the terminating resistance by those connecting devices. The terminating resistance should be set ON in only one position in whole H-LINK system.
   b) In case that H-LINK is connected only by the RAC adaptor, set the terminating resistance by the RAC adaptor. The terminating resistance should be set ON in only one position in whole H-LINK system.

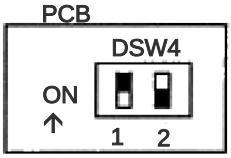

Turn ON No.1 pin of DSW4

10.2.5. TEST RUN

Test run should be performed in the following after finishing the installation, wiring and setting. Refer to the installation manuals enclosed with the control system equipment.

1) Confirmation of RAC Adaptor Connection
   Confirm if the RAC adaptor connection is recognized in the control system equipments. In case that it is not confirmed, check the transmission cable, refrigerant cycle #, indoor unit #, terminal resistance setting etc.
2) Registration
   Confirm if the RAC adaptor connection is recognized.
3) Confirmation of RUN/STOP Operation.
   Confirm if the room air-conditioner operate correctly by RUN/STOP from the central control system equipments. Check also if the room air-conditioner operation changes correctly by each setting.

10.3. DRY CONTACT (SPX-WDC3) APPLICATION (USING DIP SWITCH)

The dry contact system enables the operation of the air conditioner indoor unit to be controlled by using external dry contacts (with non voltage) such as card-key controller or window for facilities such as hotels.

Optional Connecting cord Accessory SPX-WDC3

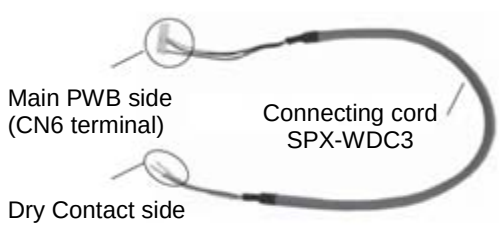

Note:

1) DRY CONTACT function is "Enable" by set pin No. 2 of the DIP SWITCH (DSW1) to ON position.
2) Select the proper setting for DRY CONTACT LOGIC INPUT pin No. 3 on DIP SWITCH (DSW1)
   i) Set to OFF position (Hi Input) if the type of Dry Contact switch to be used (for the CARD KEY UNIT or Window) is of contact type a (Normally Open Type) as shown in below diagram.
   ii) Set to ON position (Lo Input) if the type of Dry contact switch to be used (for the CARD KEY UNIT or Window) is of contact type b (Normally Close Type) as shown in below diagram.

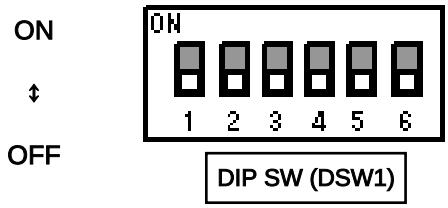

Pin No.	Function	Switch Position / Setting			
2	DRY CONTACT function	OFF	Disable	ON	Enable
3	DRY CONTACT Input Logic	OFF	HI Input Active	ON	LO Input Active

- Please decide the type of dry contact you will be using and set the position of the DIP Switch No. 2 and 3 accordingly

[1] CHECK DRY CONTACT OF CARD KEY UNIT

	AIR CONDITIONER Standby	AIR CONDITIONER Operating
CARD KEY (Door Switch)	REMOVE	INSERT
Contact type a	OPEN	CLOSE
Contact type b	CLOSE	OPEN

[2] SET THE POSITION OF DIP SWITCH

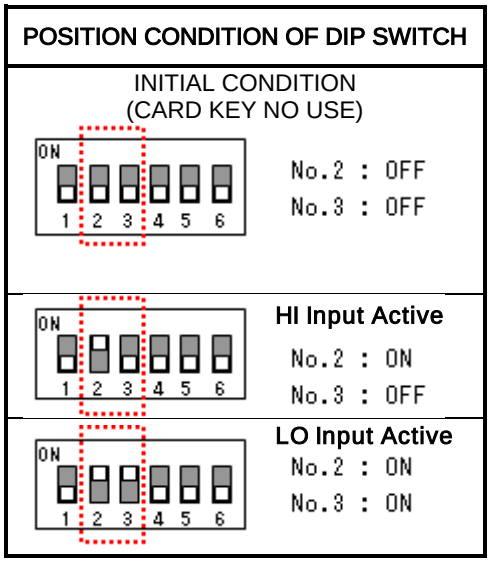

After all connection has been done as below diagram, ON the breaker and push ON button of wireless remote controller or wired remote controller to operate the air conditioner unit.

- When the CARD KEY is in insert condition, the air conditioner operation is allowable by remote controller.
- When the dry contact switch on the Card Key Unit is open (refer to diagram below for contact type a), the unit stops to operate (it takes 10 seconds to stop the unit operation after the dry contact switch on the card key turns off) and vice versa.
- When the card key is removed from the Card Key Unit, the wireless remote controller cannot be used.
- When the card key is removed from the Card Key Unit, the wired remote controller LCD display is activated; however it has no control over the unit.
- The suitable accessory Connecting Cord (accessory code#: SPX-WDC3) need to be used to connect the Card Key Unit's dry contact switch to the connector on the control board of the indoor unit

Example of wiring connection to Card Key Unit will be as below (reference only)

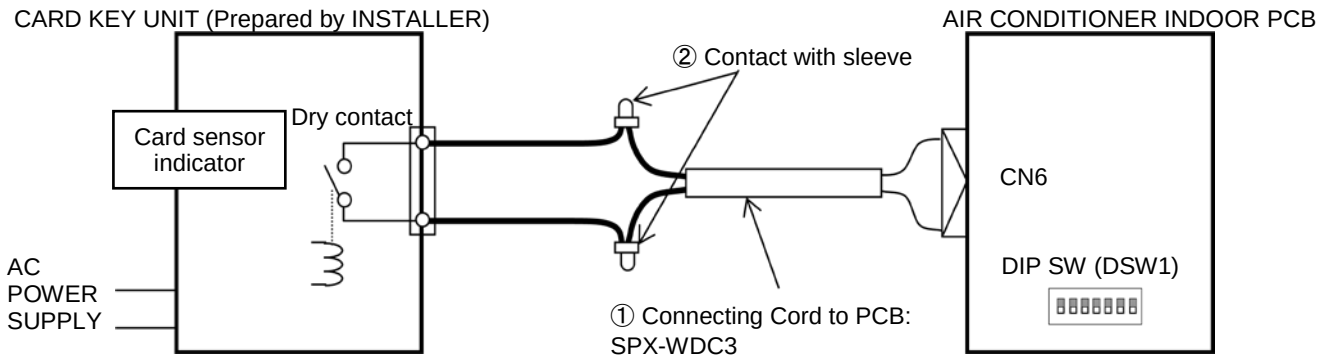

- CONNECTION EXAMPLE

i. Pin No. 3 of DIP SWITCH is set to OFF position (HI Input Active) for Dry Contact Type a

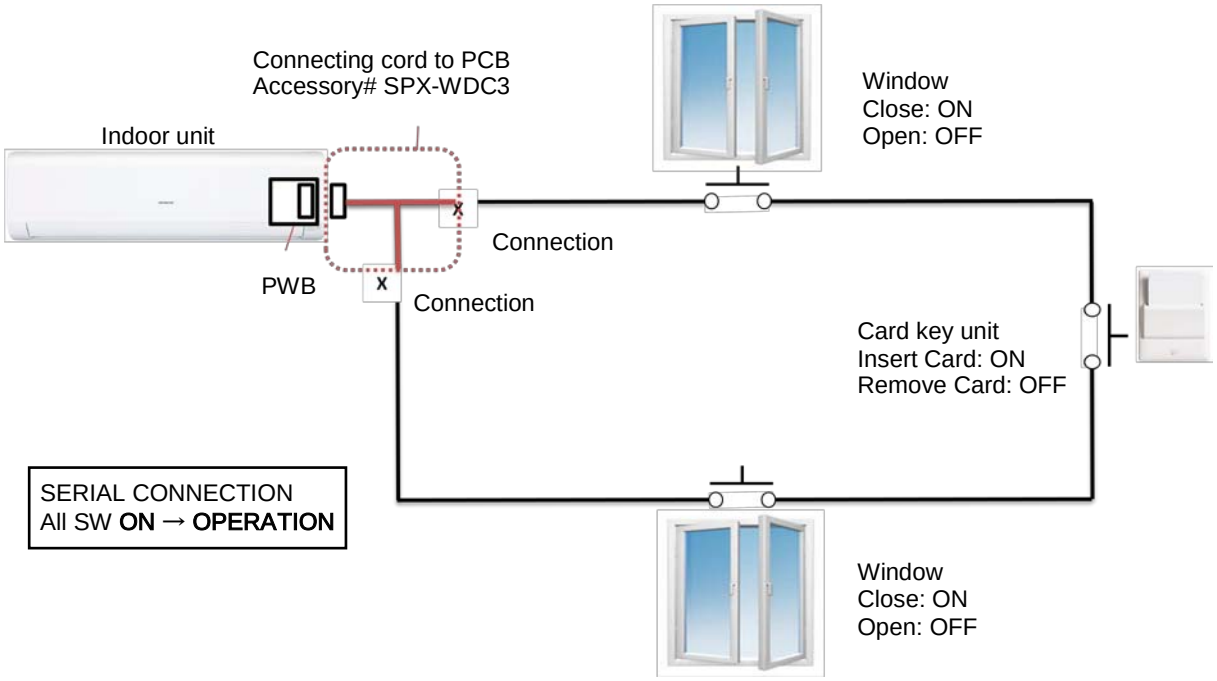

ii. Pin No. 3 of DIP SWITCH is set to ON position (LO Input Active) for Dry Contact Type b

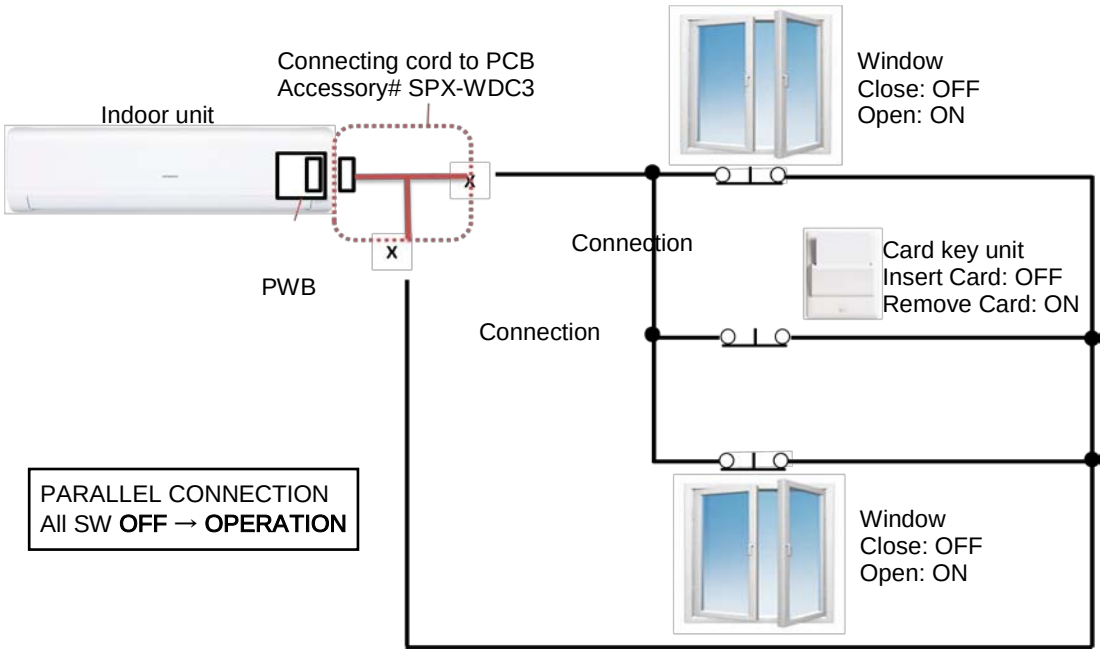

Please refer to the actual manual supplied with the optional connecting cords SPX-WDC3 for more details.

10.4. DISTRIBUTOR – SPX-DST1

The optional distributor is to be used together with the wired remote controller when there is a need to centralize the control of multiple indoor units using only a single wired remote controller.

A single distributor could be connected further to 3 separate distributors so that up to 13 units of indoor could be controlled by a single wired remote controller.

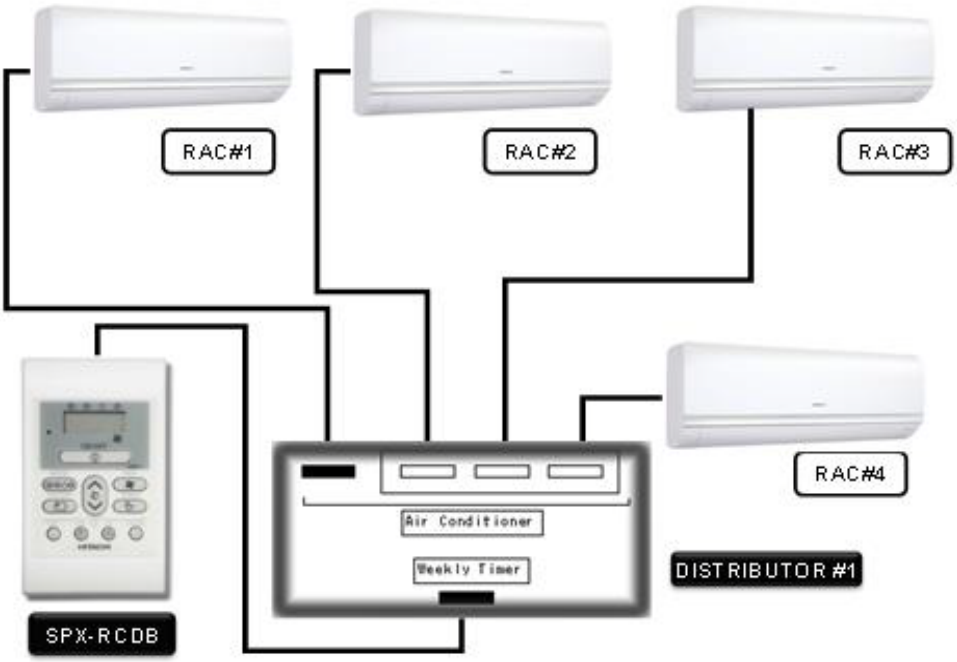

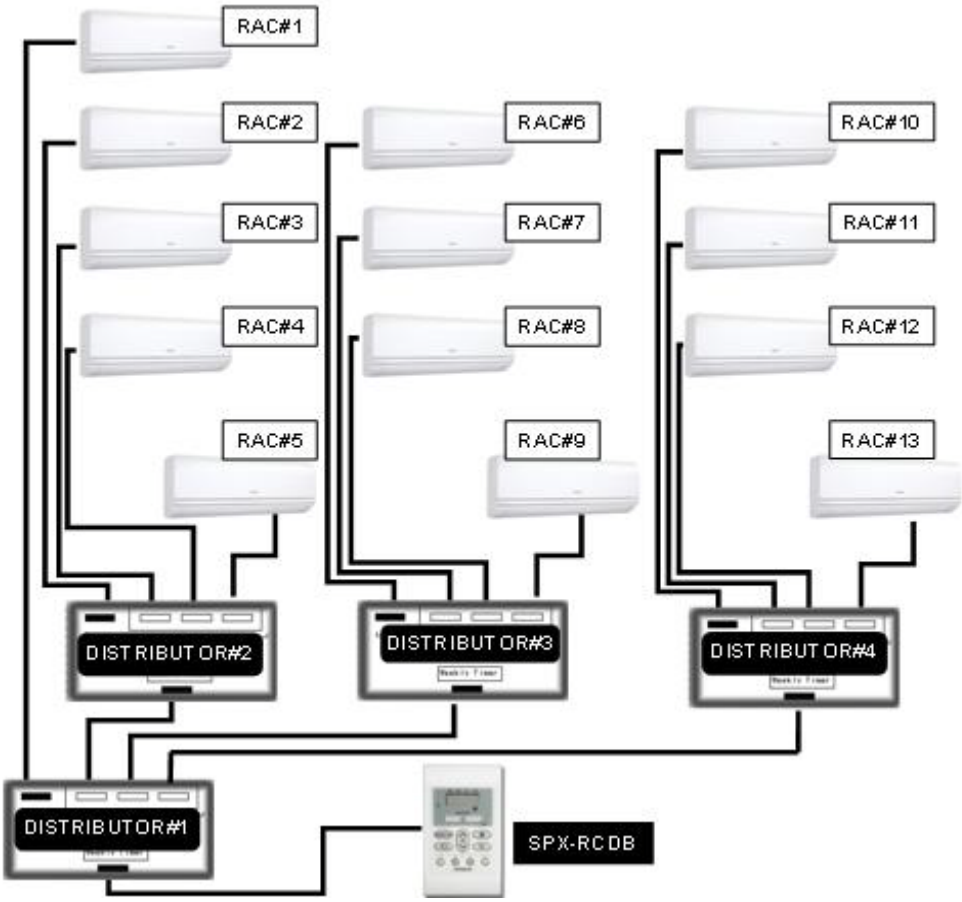

HITACHI

TC_ERP-RPB00–03/15