Installation Guide for the IN701KNX***0000 Gateway

Document version 2.0.4

Protocol Translator with KNX, Serial, and IP Support

Order code: IN701KNX***0000

"***" stands for the Intesis gateway capacity and varies depending on the specific gateway purchased.

Owner's record

Find the serial number on the silver label on the right side of the gateway. We recommend you write it in the space below for sales or technical assistance:

SN:

Safety Instructions

Follow these safety and installation instructions carefully. Improper work may lead to serious harm to your health and may seriously damage this Intesis gateway and/or any other installation equipment.

Only accredited technical personnel, following all these safety instructions and in accordance with the country's legislation for the installation of electric equipment, are authorized to install this Intesis gateway.

Install this Intesis gateway indoors, in a restricted access location, and sheltered from direct solar radiation, water, high relative humidity, or dust.

Mount this Intesis gateway, preferably, on a DIN rail inside a grounded metallic cabinet following the instructions below.

In the case of wall mounting, firmly fix this Intesis gateway on a non-vibrating surface following the instructions below.

Disconnect any wires from its power source before manipulating and connecting them to this Intesis gateway.

Use a SELV-rated NEC Class 2 or Limited Power Source (LPS) power supply.

Use a circuit breaker before the power supply. Rating: 250 V, 6 A.

Respect the expected polarity of power and communication cables when wiring this gateway.

Supply the correct voltage to power this Intesis gateway. The admitted range voltage is detailed in the technical specifications table.

Risk of explosion if the battery is replaced by an incorrect type. Only authorized installers can replace batteries. Dispose of used batteries according to the instructions.

Connect this Intesis gateway only to networks without routing to the outside plant. All communication ports are considered indoor only.

This Intesis gateway is designed for installation in an enclosure. To avoid electrostatic discharges to the unit in environments with static levels above 4 kV, precautions should be taken when the device is mounted outside an enclosure. When working in an enclosure (ex. making adjustments, setting switches etc.) typical anti-static precautions should be observed before touching the unit.

Safety instructions in other languages can be found at: https://intesis.com/docs/manuals/v6-safety

Configuration

Connect the gateway to a computer using the USB Mini-B type to USB Type A cable (included).

Configure the gateway using Intesis MAPS. Download the latest version of the configuration tool at www.intesis.com/products/intesis-maps.

For further information on the configuration, refer to the Configuration Guide.

Dimensions

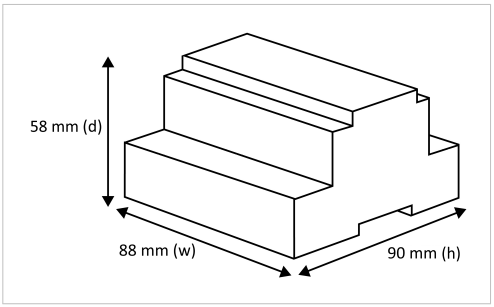

Leave enough clear space to wire the gateway easily and for the subsequent manipulation of elements such as connectors, DIP switches, etc.

Mounting

Mount this gateway over a DIN rail, preferably inside a grounded metallic industrial cabinet.

1. Fit the gateway's top-side clips in the upper edge of the DIN rail.
2. Press the low side of the gateway gently to lock it in the DIN rail.
3. Make sure the gateway is firmly fixed.

For some DIN rails, to complete step 2, you may need a small screwdriver or similar to pull the bottom clip down.

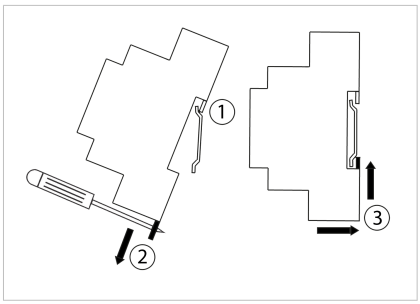

Connections

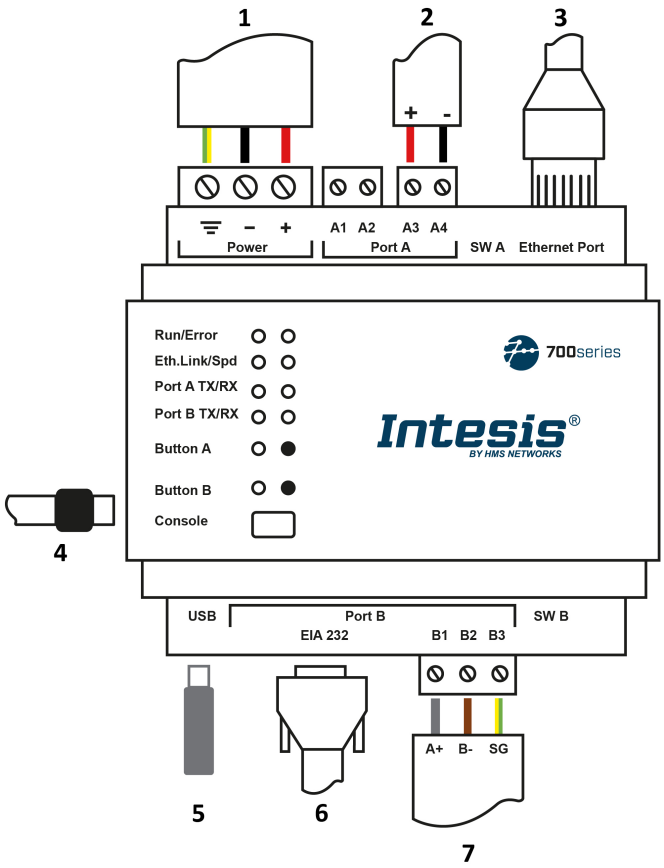

1. **Power Supply** (9-36 VDC / 24 VAC)
2. **Port A KNX**
3. **Ethernet**
4. **Console Port**
   USB Mini-B type
5. **USB storage**
6. **Port B EIA-232**
7. **Port B EIA-485**

Power supply: Use a SELV-rated NEC class 2 or Limited Power Source (LPS) power supply. Connect the gateway's ground terminal (⏚) to the installation grounding.

Power rating:

- **For DC**: 9 .. 36 VDC, Max: 180 mA, 1.7 W
- **For AC**: 24 VAC ±10 %, 50-60 Hz, Max: 70 mA, 1.7 W
  Recommended voltage: 24 VDC, Max: 70 mA

Communication ports:

PORT	USAGE	WIRING			
Port A	KNX bus	*A1: Not used*	*A2: Not used*	**A3**: +	**A4**: −
Ethernet	**As a TCP/IP port**: BACnet/IP and Modbus TCP **As a console port**: Connection to a PC for configuration purposes	Ethernet cable (CAT5 or higher) When using the building LAN, contact the network administrator and make sure traffic is allowed. When starting up the gateway for the first time, DHCP will be enabled for 30 seconds. After that time, the default IP 192.168.100.246 will be set.			
Port B EIA-485 [1]	BACnet MS/TP and Modbus RTU	**B1**: A+	**B2**: B-	**B3**: SG	
Port B EIA-232	Modbus RTU and ASCII	DB9 connector Only lines RX, TX, and Ground (corresponding to pins 2, 3, and 5) are used			
Console	Connection to a PC for configuration purposes	USB Mini-B type			

USB: USB Type A 2.0 connector for saving logs into a USB flash drive. This USB connector does not support HDD devices.

[1] **Standard EIA-485 bus requirements**: maximum distance of 1200 meters (0.75 miles); up to 32 devices connected; a 120 Ω resistor at each end of the bus is needed (configure the bus biasing and termination resistor for Port EIA-485 with the DIP switch SWA. See the Technical Specifications table).

Application	Port A KNX	Port B EIA-485	Port B EIA-232	Ethernet
IN-MBS-KNX	KNX	Modbus RTU	Modbus RTU	Modbus TCP Console
IN-KNX-MBM	KNX	Modbus RTU	N/A	Modbus TCP Console
IN-BAC-KNX	KNX	BACnet MS/TP	N/A	BACnet/IP Console Modbus TCP (available as a secondary protocol)
IN-KNX-BAC	KNX	BACnet MS/TP	N/A	BACnet/IP Console
IN-ASC-KNX	KNX	ASCII	ASCII	ASCII TCP Console

Scan here for further configuration details

Disposal and Recycling

This product contains electronic components and must be properly disposed of according to local laws and regulations. For further information, refer to: https://www.intesis.com/weee-regulation

For further information on the installation, connection, and configuration of this gateway, refer to the User manual.

Technical Specifications

Housing	Material: Plastic, type ABS (UL 94 V-0) Color: Light grey (RAL 7035) Net dimensions (HxWxD): 90 x 88 x 58 mm / 3.54 x 3.46 x 2.28"
Mounting	DIN rail EN 60715 TH35
Wiring	Cross-section/gauge per terminal: One core: 0.2 .. 2.5 mm^2 (24 .. 11 AWG) Two cores: 0.2 .. 1.5 mm^2 (24 .. 15 AWG) Three cores: Not permitted Use solid wires or stranded wires (twisted or with ferrule).
Power supply	1 x Green pluggable terminal block (three poles) 9 .. 36 VDC, Max: 180 mA, 1.7 W 24 VAC ±10%, 50-60Hz, Max: 70 mA, 1.7 W Recommended: 24 VDC, 70 mA Connect the ground terminal (⏚) to the installation grounding
Port A	1 x Green pluggable terminal block (2 poles) + 1 x Orange pluggable terminal block (2 poles): • **A1**: *Not used* • **A2**: *Not used* • **A3**: + • **A4**: − 2500 VDC isolation from other ports KNX power consumption: 5 mA Voltage rating: 29 VDC
Ethernet	1 x Ethernet RJ45 10/100BASE-T
Port B EIA-485	1 x Green pluggable terminal block (three poles): **B1**: A+ **B2**: B- **B3**: SG 1500 VDC isolation from other ports (except Port B EIA-232)
Port B EIA-232	1 x DB9 male connector 1500 VDC isolation from other ports (except Port B EIA-485)
USB port	USB A type 2.0 connector Flash drives only (HDD not supported) Power consumption limited to 150 mA
Console port	USB Mini-B type 2.0 connector
Battery	Type: Manganese Dioxide Lithium button battery Size: 20 mm x 3.2 mm (0.79" x 0.13") Capacity: 3 V, 255 mA
Buttons	2 x Push buttons Button A Button B
LED indicators	10 x LEDs for gateway and communication status 2 x Run (Power/Error) 2 x Ethernet Link/Speed 2 x Port A TX/RX 2 x Port B TX/RX 1 x Button A indicator 1 x Button B indicator
DIP switches SW A / SW B	2 x DIP switch blocks for EIA-485 serial port configuration: DIP switch A (SW A): Not used DIP switch B (SW B): Position 1: On: 120 Ω termination active Off: 120 Ω termination inactive Position 2 and 3: On: Polarization active Off: Polarization inactive
Operational conditions	Before serial number 000R05920, Temperature: 0… 60°C / 32.. 140°F After serial number 000R05920 (included), Temperature: -10… 60°C / 14.. 140°F Humidity: 5 .. 95% (No condensation)

© HMS Industrial Networks SLU | www.hms-networks.com