ENGLISH

IN701-KNX Series

INTESIS PROTOCOL TRANSLATOR WITH KNX, SERIAL, AND IP SUPPORT

USER MANUAL
Version 1.4.7
Publication date 2024-05-16

Copyright © 2022 Intesis

Disclaimer

The information in this document is for informational purposes only. Please inform HMS Networks of any inaccuracies or omissions found in this document. HMS Networks disclaims any responsibility or liability for any errors that may appear in this document.

HMS Networks reserves the right to modify its products in line with its policy of continuous product development. The information in this document shall therefore not be construed as a commitment on the part of HMS Networks and is subject to change without notice. HMS Networks makes no commitment to update or keep current the information in this document.

The data, examples and illustrations found in this document are included for illustrative purposes and are only intended to help improve understanding of the functionality and handling of the product. In view of the wide range of possible applications of the product, and because of the many variables and requirements associated with any particular implementation, HMS Networks cannot assume responsibility or liability for actual use based on the data, examples or illustrations included in this document nor for any damages incurred during installation of the product. Those responsible for the use of the product must acquire sufficient knowledge in order to ensure that the product is used correctly in their specific application and that the application meets all performance and safety requirements including any applicable laws, regulations, codes and standards. Further, HMS Networks will under no circumstances assume liability or responsibility for any problems that may arise as a result from the use of undocumented features or functional side effects found outside the documented scope of the product. The effects caused by any direct or indirect use of such aspects of the product are undefined and may include e.g. compatibility issues and stability issues.

Table of Contents

1. Description and Order Codes 1

2. General Information 2

2.1. Intended Use of the User Manual 2
2.2. General Safety Information 2
2.3. Admonition Messages and Symbols 2

3. General Introduction 4

4. KNX TP to Modbus Server 5

4.1. Specific Introduction 5
4.2. Functionality 5

5. Modbus Client to KNX 6

5.1. Specific Introduction 6
5.2. Functionality 6

6. KNX to BACnet Server 7

6.1. Specific Introduction 7
6.2. Functionality 7

7. BACnet Client to KNX 8

7.1. Specific Introduction 8
7.2. Functionality 8

8. KNX to ASCII 9

8.1. Specific Introduction 9
8.2. Functionality 9

9. Gateway Capacity 10

10. KNX Interface 11

10.1. Description 11
10.2. Points Definition 11

11. Modbus Interface 12

11.1. General Description 12
11.2. Modbus Server Interface 12
11.2.1. Description 12
11.2.2. Functions Supported 12
11.2.3. Modbus RTU 13
11.2.4. Modbus TCP 13
11.2.5. Modbus Server Interface Points Definition 14
11.3. Modbus Client Interface 14
11.3.1. Description 14
11.3.2. Points Definition 15

12. BACnet Interface 16

12.1. General Description 16
12.2. BACnet Client 17
12.2.1. Description 17
12.2.2. Points Definition 18
12.3. BACnet Server 19

12.3.1. Description 19
12.3.2. BACnet/IP 20
12.3.3. BACnet MS/TP 20

13. ASCII Interface 21
13.1. Description 21
13.2. ASCII Serial 21
13.3. ASCII TCP 21
13.4. Address Map 21
13.5. Points Definition 22
13.6. Messages 23

14. Mounting 24

15. Connections 25
15.1. Power Supply 25
15.2. Connection Diagrams for each Application 27
15.3. Connection to KNX 32
15.4. Connection to BACnet 32
15.5. Connection to Modbus 34
15.6. Connection to ASCII 35
15.7. Console and USB Connections 36

16. Set-up Process with the Configuration Tool 37
16.1. Prerequisites 37
16.2. Intesis MAPS: Configuration and Monitoring Tool 37
16.2.1. Introduction 37
16.2.2. Template Selection 38
16.2.3. Connection Tab 39
16.2.4. Configuration Tab 40
16.2.5. Signals Tab 41
16.2.6. Receive/Send Tab 41
16.2.7. Diagnostic Tab 43

17. Technical Specifications 45

18. Dimensions 46

1. Description and Order Codes

ORDER CODE	LEGACY ORDER CODE				
IN701KNX1000000	INMBSKNX1000000	INKNXMBM1000000	INBACKNX1000000	INKNXBAC1000000	-
IN701KNX2500000	INMBSKNX2500000	INKNXMBM2500000	INBACKNX2500000	INKNXBAC2500000	-
IN701KNX6000000	INMBSKNX6000000	INKNXMBM6000000	INBACKNX6000000	INKNXBAC6000000	INASCKNX6000000
IN701KNX1K20000	INMBSKNX1K20000	INKNXMBM1K20000	INBACKNX1K20000	INKNXBAC1K20000	-
IN701KNX3K00000	INMBSKNX3K00000	INKNXMBM3K00000	INBACKNX3K00000	INKNXBAC3K00000	INASCKNX3K00000

PRODUCT NAME	ORDER CODE	DESCRIPTION	INTESIS MAPS TEMPLATE	APPLICATION
IN701-KNX	IN701KNX∗∗∗0000[1]	Intesis Protocol Translator with KNX, Serial, and IP Support	IN-MBS-KNX	KNX to Modbus server
			IN-KNX-MBM	Modbus client to KNX
			IN-BAC-KNX	KNX to BACnet server
			IN-KNX-BAC	BACnet client to KNX
			IN-ASCII-KNX	KNX to ASCII

[1] *∗∗∗ defines the Intesis gateway capacity.*

2. General Information

2.1. Intended Use of the User Manual

This manual contains the main features of this Intesis gateway and the instructions for its appropriate installation, configuration, and operation.

The contents of this manual should be brought to the attention of any person who installs, configures, or operates this gateway or any associated equipment.

Keep this manual for future reference during the installation, configuration, and operation.

2.2. General Safety Information

IMPORTANT
Follow these instructions carefully. Improper work may seriously harm your health and damage the gateway and/or any other equipment connected to it.

Only technical personnel, following these instructions and the country legislation for installing electrical equipment, can install and manipulate this gateway.

Install this gateway indoors, in a restricted access location, avoiding exposure to direct solar radiation, water, high relative humidity, or dust.

All wires (for communication and power supply, if needed) must only be connected to networks with indoor wiring. All communication ports are considered for indoor use and must only be connected to SELV circuits.

Disconnect all systems from power before manipulating and connecting them to the gateway.

Use SELV-rated NEC class 2 or limited power source (LPS) power supply.

Use a circuit breaker before the power supply. Rating: 250 V, 6 A.

Respect the expected polarity of power and communication cables when connecting them to the gateway.

CAUTION
Only an authorized installer is allowed to replace the battery. There's a risk of explosion if the battery is replaced by an incorrect type. Dispose of used batteries according to local legislation.

Safety instructions in other languages can be found at https://intesis.com/docs/manuals/v6-safety

2.3. Admonition Messages and Symbols

DANGER
Instructions that must be followed to avoid an imminently hazardous situation that, if not avoided, will result in death or severe injury.

WARNING
Instructions that must be followed to avoid a potentially hazardous situation that, if not avoided, could result in death or severe injury.

CAUTION
Instruction that must be followed to avoid a potentially hazardous situation that, if not avoided, could result in minor or moderate injury.

IMPORTANT
Instruction that must be followed to avoid a risk of reduced functionality and/or damage to the equipment or to avoid a network security risk.

NOTE
Additional information which may facilitate installation and/or operation.

TIP
Helpful advice and suggestions.

NOTICE
Remarkable Information.

3. General Introduction

This Intesis® gateway allows you to integrate Serial and IP protocols to KNX easily.

This document describes the available applications for this gateway:

- KNX TP to Modbus® TCP & RTU Server.
- Modbus TCP & RTU Client to KNX TP.
- KNX TP to BACnet®/IP & MS/TP Server.
- BACnet/IP & MS/TP Client to KNX TP.
- KNX TP to ASCII IP & Serial Server.

IMPORTANT
This document assumes that the user is familiar with KNX, BACnet, Modbus, and ASCII technologies and their technical terms.

NOTE
Some sections provide general information common to all applications, while others highlight specific differences, capacities, or limitations.

In general terms, you must have a KNX installation or device on one side and a BACnet, Modbus, or ASCII installation or device on the other side (only one at a time).

IMPORTANT
The Intesis gateway can act as a server or client for BACnet and Modbus but only as a server for ASCII.

As always, the configuration process is fast and easy:

1. Launch the configuration tool.
2. Select the template.
3. Connect the Intesis gateway to the PC.
4. Adjust the configuration and signals to your project.
5. Send the configuration to the gateway.

And you are ready to go!

4. KNX TP to Modbus Server

4.1. Specific Introduction

This section describes the integration of KNX systems into Modbus RTU and/or Modbus TCP systems using the **KNX TP to Modbus TCP & RTU server** application of the Intesis gateway.

This integration allows a Modbus installation to access the groups, objects, and associated devices of KNX devices as if they were part of the Modbus system itself and vice versa.

The gateway acts as a Modbus TCP or RTU server device in its Modbus interface, allowing read/write points from the Modbus client devices, and offering these points' values through its KNX interface, acting as one more KNX device of the system.

The gateway configuration is carried out through the configuration tool.

Figure 1. Integration of KNX TP devices into Modbus RTU or Modbus TCP control and monitor systems

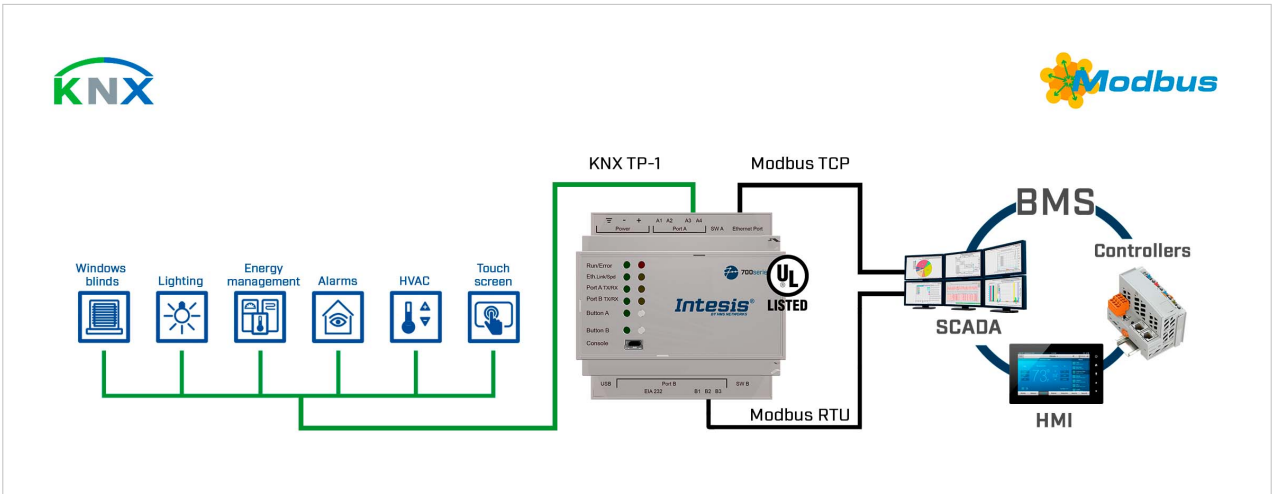

4.2. Functionality

From the KNX system point of view, after starting the gateway or performing a KNX bus reset, the Intesis gateway polls the KNX signals and stores the received values in its memory, ready to be served to the Modbus system when requested. It also listens for any KNX telegram related to the internal points configured in it and acts accordingly to the configuration of the related points.

From the Modbus system point of view, after starting it, the gateway listens for any read or write request, serves any read request, or performs any writing request of its internal points received from the Modbus system. The values received from Modbus become available to be read by the KNX system and vice versa.

In the gateway, each Modbus point is associated with a KNX group address so that the KNX system sees the whole Modbus system as if it was one more KNX device with the same configuration and operation characteristics.

When a Modbus point changes, the gateway sends a write telegram to the associated group address in the KNX bus.

When the gateway receives a telegram from a KNX group address associated with a Modbus point, it sends a message to the corresponding Modbus device to perform the related action.

5. Modbus Client to KNX

5.1. Specific Introduction

This section describes the integration of Modbus RTU devices into KNX installations using the **Modbus TCP & RTU client to KNX TP** application of the Intesis gateway.

This integration allows a KNX installation to access the signals and resources of Modbus devices as if they were part of the KNX system and vice versa.

The gateway acts as a Modbus TCP or RTU client device in its Modbus interface, reading/writing points from the Modbus server devices by automatic continuous polling. The gateway offers these points' values through its KNX interface, acting as one more KNX device of the system.

The gateway configuration is carried out through the configuration tool.

Figure 2. Integration of Modbus TCP or RTU devices into KNX control and monitoring systems

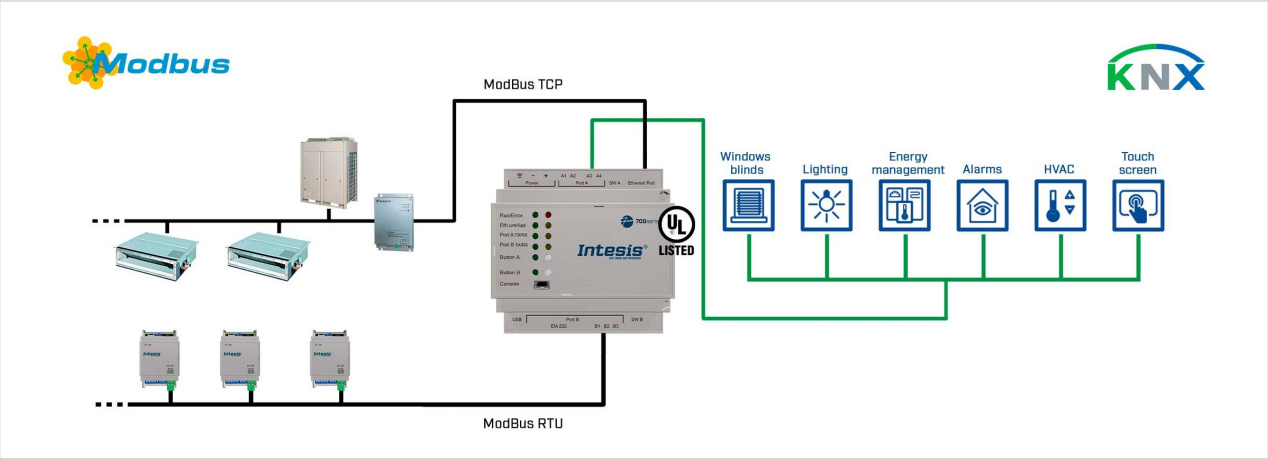

5.2. Functionality

From the Modbus system point of view, after starting it, the Intesis gateway continuously reads the Modbus RTU service devices, updating all the points' values received in its memory.

From the KNX system point of view, after starting the gateway or performing a KNX bus reset, the Intesis gateway polls the KNX signals and stores the received values in its memory, ready to be served to the Modbus system when requested. It also listens for any KNX telegram related to the internal points configured in it and acts accordingly to the configuration of the related points.

In the gateway, each Modbus point is associated with a KNX group address so that the KNX system sees the whole Modbus system as if it was one more KNX device with the same configuration and operation characteristics.

When a Modbus point changes, the gateway sends a write telegram to the associated group address in the KNX bus.

When the gateway receives a telegram from a KNX group address associated with a Modbus point, it sends a message to the corresponding Modbus device to perform the related action.

When polling the Modbus devices, if a non-response is detected, the corresponding virtual signal inside the gateway will be activated to indicate the communication error as a KNX group address.

6. KNX to BACnet Server

6.1. Specific Introduction

This section describes the integration of KNX devices into BACnet MS/TP or BACnet/IP installations using the **KNX TP to BACnet server** application of the Intesis gateway.

This integration allows a BACnet installation to access the signals and resources of KNX devices as if they were part of the BACnet system itself and vice versa.

The gateway acts as a BACnet/IP server or BACnet MS/TP device in its BACnet interface, allowing other BACnet devices to perform subscription (COV) requests and readings/writings to its internal points. From the KNX point of view, the gateway emulates a KNX device.

The gateway configuration is carried out through the configuration tool.

Figure 3. Integration of KNX devices into BACnet/IP or BACnet MS/TP control and monitoring systems

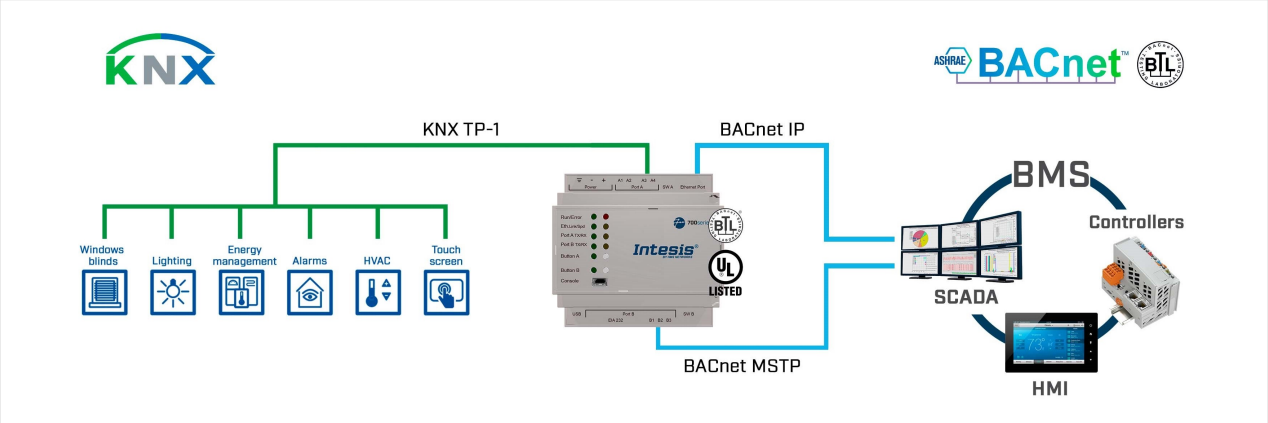

6.2. Functionality

From the KNX system point of view, after starting the gateway or performing a KNX bus reset, the Intesis gateway polls the KNX signals and stores the received values in its memory, ready to be served to the BACnet system when requested. It also listens for any KNX telegram related to the internal points configured in it and acts accordingly to the configuration of the related points.

From the BACnet system point of view, after starting it, the gateway listens for any subscription (COV) request, serves any polling request, or performs any writing request of its internal points received from the BACnet system. The values received from BACnet are immediately written in the associated KNX communication object if allowed by the KNX settings.

In the KNX part, one main group address and different listening group addresses can be defined for every point. This way, every point can be addressed using its main group address and the other specified listening addresses.

Any change in a point in the gateway with the “T” flag activated (in the KNX part) will force the transmission of this point value with the corresponding telegram to the KNX system.

Any point with the “W” flag activated (in the KNX part) can be written from the KNX system at any moment.

Any point with the “R” flag activated (in the KNX part) can be read from the KNX system at any moment.

Any point with the “Ri” flag activated (in the KNX part) will be read after every reset of the gateway.

7. BACnet Client to KNX

7.1. Specific Introduction

This section describes the integration of BACnet MS/TP and BACnet/IP devices into KNX installations using the **BACnet client to KNX** application of the Intesis gateway.

This integration allows a KNX installation to access the signals and resources of BACnet devices as if they were part of the KNX system itself and vice versa.

From the BACnet point of view, the gateway acts as a BACnet client device, so it can subscribe (COV) or perform periodic polling and writings on configured BACnet objects. The BACnet points' values are available through its KNX interface, acting in the KNX system as one more KNX device.

The gateway configuration is carried out through the configuration tool.

Figure 4. Integration of BACnet/IP or MS/TP devices into KNX control and monitoring systems

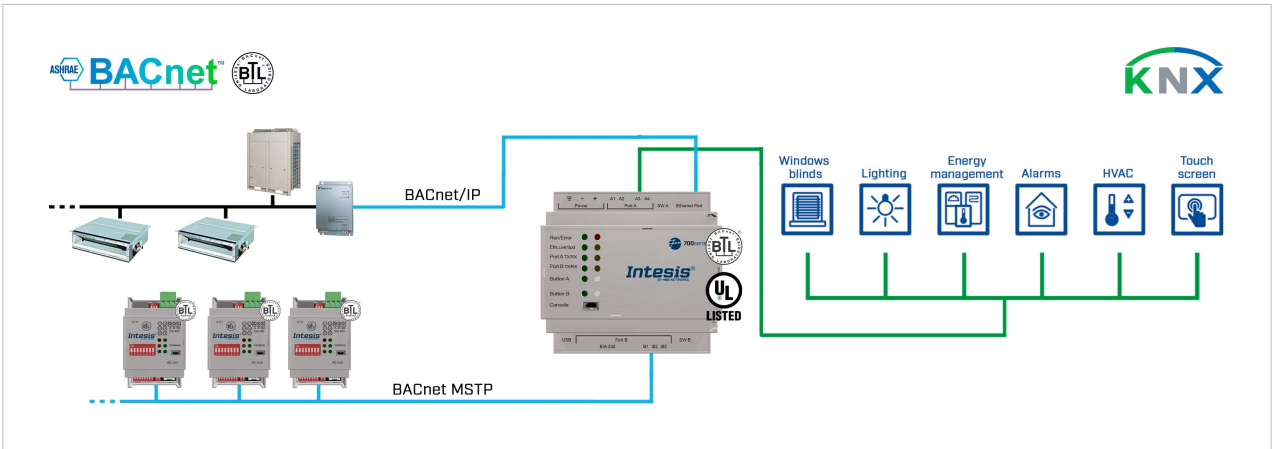

7.2. Functionality

From the BACnet system point of view, after starting it, the gateway subscribes to configured BACnet points or reads them continuously from their respective BACnet server devices, updating in its memory the received value of their Present_Value property.

Each Present_Value is associated with a KNX group object that, in turn, is associated with one or more KNX group addresses.

When a KNX object changes, it is transmitted to the KNX system with its corresponding group address.

Likewise, when a change is received in a write-enabled KNX group object, the change is written to the Present_Value property of the corresponding BACnet object associated with it (using the WriteProperty BACnet service).

Therefore, the Intesis gateway performs as a single KNX device in the KNX system, offering communication objects to access the BACnet objects of the configured external BACnet devices.

When polling BACnet server devices, if a non-response is detected, the corresponding virtual signal inside the gateway will be activated to indicate the communication error to the KNX system as a KNX group object.

8. KNX to ASCII

8.1. Specific Introduction

This section describes the integration of KNX devices into ASCII serial (EIA-232 or EIA-485) or ASCII IP installations using the **KNX to ASCII server** application of the Intesis gateway.

This integration aims to make the signals and resources of KNX devices accessible from any programmable system capable of reading/writing simple text messages through EIA-232 or EIA-485 serial port or Ethernet TCP/IP port (for example, Extron, LiteTouch systems).

In its KNX interface, the Intesis gateway acts as a KNX device, reading/writing points from other KNX devices and offering these points' values through its ASCII interface using simple ASCII messages.

The gateway configuration is carried out through the configuration tool.

Figure 5. Integration of KNX devices into ASCII IP or ASCII serial control and monitoring systems

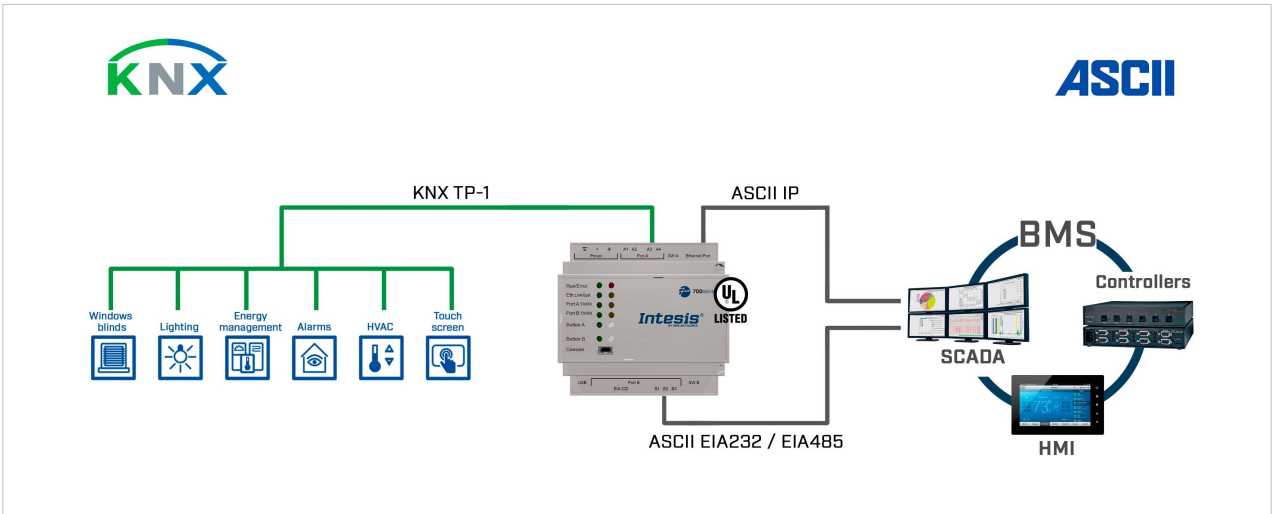

8.2. Functionality

From the KNX system point of view, after starting the gateway or performing a KNX bus reset, the Intesis gateway polls the KNX signals and stores the received values in its memory, ready to be served to the ASCII system when requested. It also listens for any KNX telegram related to its configured internal points and acts accordingly to the configuration of the related point.

From the ASCII system point of view, after starting it, the gateway listens for any read or write request, serves any read request, or performs any writing request of its internal points received from the ASCII system. The values received from ASCII become available to be read by the KNX system and vice versa.

In the gateway, each ASCII point is associated with a KNX group address, so the KNX system sees the whole ASCII system as if it was one more KNX device, with the same configuration and operation characteristics.

When an ASCII point changes, the gateway sends a write telegram to the associated group address in the KNX bus.

When the gateway receives a telegram from a KNX group address associated with an ASCII point, it sends a message to the corresponding ASCII device to perform the related action.

9. Gateway Capacity

Table 1. For KNX to Modbus server

Element	100 version	250 version	600 version	1200 version	3000 version
Maximum number of KNX communication objects	100	250	600	1200	3000
Maximum number of KNX main group addresses	100	250	600	1200	3000
Maximum number of KNX associations	200	500	1200	2400	6000
Type of Modbus client devices supported	Those supporting Modbus protocol communication over TCP/IP and RTU (EIA-485 and EIA-232)				
Number of Modbus client nodes and devices supported	TCP: Up to 5 TCP nodes RTU: one client device per RTU node				

Table 2. For Modbus Client to KNX

Element	100 version	250 version	600 version	1200 version	3000 version
Maximum number of KNX communication objects	100	250	600	1200	3000
Maximum number of KNX main group addresses	100	250	600	1200	3000
Maximum number of possible KNX associations	200	500	1200	2400	6000
Type of Modbus server devices supported	Those supporting Modbus protocol communication over TCP/IP and RTU (EIA-485)				
Number of Modbus server nodes and devices supported	TCP: Up to 5 Modbus TCP nodes and up to 254 devices per TCP node RTU: Up to 254 Modbus RTU devices				

Table 3. For KNX to BACnet server

Element	100 version	250 version	600 version	1200 version	3000 version
Maximum number of BACnet objects	100	250	600	1200	3000
Maximum number of BACnet subscriptions (COV) requests	200	500	1200	2400	6000
Maximum number of KNX main group addresses	100	250	600	1200	3000
Maximum number of KNX associations	200	500	1200	2400	6000
Type of BACnet devices supported	Those supporting communication with BACnet/IP and MS/TP				

Table 4. For BACnet Client to KNX

Element	100 version	250 version	600 version	1200 version	3000 version
Maximum number of communication objects	100	250	600	1200	3000
Maximum number of main group addresses	100	250	600	1200	3000
Maximum number of KNX associations	200	500	1200	2400	6000
Type of BACnet devices supported	Those supporting communication with BACnet/IP and MS/TP				
Maximum number of BACnet devices	256				

Table 5. For KNX to ASCII

Element	100 version	250 version	600 version	1200 version	3000 version
Maximum number of KNX main group addresses	100	250	600	1200	3000
Maximum number of KNX associations	200	500	1200	2400	6000
Maximum number of ASCII registers	100	250	600	1200	3000
ASCII link layers supported	Those supporting communication with ASCII client with simple messages through a TCP/IP or serial connection (EIA-232 and EIA-485)				

10. KNX Interface

10.1. Description

The KNX interface of the gateway connects directly to the KNX bus performing as one more device in the KNX system. In this way, the gateway can receive, manage, and send all telegrams related to its configuration to the KNX bus.

When the gateway receives write telegrams of KNX group addresses associated with internal datapoints, it sends the corresponding messages to the internal system, keeping both systems synchronized at every moment.

When the gateway detects a change in a signal of the other side's protocol, it sends a write telegram to the KNX bus (addressed with the group address associated with the corresponding group object), keeping both systems synchronized at every moment.

Since the gateway continuously checks the KNX bus status, if a bus drop-down is detected, for example, due to a failure in the bus power supply, once the KNX bus is restored, the gateway will send read telegrams to all group objects marked with "Ri." The behavior of each point in the gateway is determined by the flags configured for the point.

10.2. Points Definition

Every internal communication object has the following KNX properties:

Property	Description
Description	Descriptive information about the communication object or signal.
Signal	Signal description. Only for informative purposes (it facilitates the identification of the signal).
DPT	KNX Datapoint Types used to code the signal value. It will depend on the type of signal associated with the external system in every case. In some integrations, it is selectable while, in others, it is fixed due to the intrinsic characteristics of the signal.
Group	KNX group to which the point is associated. It is also the group to which the read (R), write (W), transmit (T), update (U), and read on init (Ri) flags are applied. It is the sending group.
Additional addresses	Addresses allowed to write on the group object, apart from the main group address.
R	Read. If this flag is activated, read telegrams of this group address will be accepted.
Ri	Read on Init. If this flag is activated, the object will trigger the corresponding read request (on the associated group address) on initialization.
W	Write. If this flag is activated, write telegrams on this group object will be accepted.
T	Transmit. If this flag is activated, when the group object value changes due to a change in the external system, a write telegram of the associated group address will be sent to the KNX bus.
U	Update. If this flag is activated, update telegrams (response to read telegrams) on this group object will be accepted.
Active	If activated, the point will be active in the Intesis gateway; if not, its behavior will be as if it was not defined. This property allows deactivating points without deleting them, keeping them for future use if needed.

11. Modbus Interface

11.1. General Description

The Modbus protocol is an application-layer messaging protocol developed by Modicon in 1979. It is used to establish master-slave/client-server communication between intelligent devices over different types of buses or networks. The Intesis gateway supports Modbus TCP and RTU.

Modbus is a request/reply protocol and offers services specified by function codes. Modbus function codes are elements of Modbus request/reply PDUs (Protocol Data Unit).

11.2. Modbus Server Interface

11.2.1. Description

The gateway acts as a server device in its Modbus interface, which can be:

- The Ethernet port for Modbus TCP.
- The EIA-485/EIA-232 ports for Modbus RTU.

NOTICE
Modbus RTU and TCP modes can be active in the gateway one at a time or both simultaneously.

To access the gateway's points and resources from a Modbus client device, you must specify as Modbus register addresses those configured inside the gateway corresponding to the signals on the field device protocol.

11.2.2. Functions Supported

NOTICE
This part is common for both Modbus TCP and Modbus RTU.

Table 6. Modbus functions

#	Function	Read/Write
01	Read Coils	R
02	Read Discrete Inputs	R
03	Read Holding Registers	R
04	Read Input Registers	R
05	Write Single Coil	W
06	Write Single Register	W
15	Write Multiple Coils	W
16	Write Multiple Registers	W

If poll records are used to read or write more than one register, the range of addresses requested must contain valid addresses; if not, the Intesis gateway will return the corresponding Modbus error code.

All registers are of 2 bytes, even if they are associated with signals of bit type on theKNX side. Its content is expressed in MSB .. LSB.[1]

Modbus error codes are fully supported. They are sent whenever a non-valid Modbus action or address is required.

[1]MSB: most significant bit; LSB: less significant bit

11.2.3. Modbus RTU

Using the configuration tool, you can set these parameters:

- Baud rate: 1200, 2400, 4800, 9600, 19200, 38400, 56700 and 115200 bps.
- Data Bits: 8 bits.
- Parity: none, even, or odd.
- Stop Bits: 1 and 2 bits.
- Modbus server address.
- Physical connection (EIA-232 or EIA-485).

IMPORTANT

- EIA-232 connector uses RX, TX, and GND lines.
- EIA-485 connector uses B-, A+, and SNGD.

11.2.4. Modbus TCP

Modbus TCP communication is characterized basically by the embedding of the Modbus RTU protocol into TCP/IP frames, which allows faster communication and a longer distance between client and server devices in comparison with RTU communication over a serial line. Another benefit is using common TCP/IP infrastructure in buildings and transmitting over WAN or the internet. It also allows the coexistence of one or more clients and, of course, one or more server devices in a given network, all interconnected through a TCP/IP-based network.

Use the configuration tool to configure the IP settings of the gateway (DHCP status, own IP, netmask, and default gateway) and the TCP port.

NOTE

The default port is 502.

11.2.5. Modbus Server Interface Points Definition

The Modbus registers are fully configurable through the configuration tool; any point in the gateway can be freely configured with the desired Modbus register address.

Every point defined in the gateway has the following Modbus features associated with it:

Feature	Description
#Bits	• 1 bit • 16 bits • 32 bits
Data Coding Format	• 16/32 unsigned • 16/32 bits signed (one's complement – C1) • 16/32 bits signed (two's complement – C2) • 16/32 bits Float • 16/32 bits Bitfields • Error comm.
Byte Order	• Big Endian • Little Endian • Word Inverted Big Endian • Word Inverted Little Endian
Register Address	The Modbus register address inside the server device for the point.
Bit inside the register	Bit inside the Modbus register (optional). The Intesis gateway allows bit decoding from generic 16 bits input/holding Modbus registers. *Some devices use the bit coding into 16 bits input/holding Modbus registers to encode digital values. These registers are generally accessible using Modbus function codes 03 and 04 (read holding/input registers).*
Read/Write	0: Read 1: Write 2: Trigger

11.3. Modbus Client Interface

11.3.1. Description

The Intesis gateway acts as a client device in the Modbus TCP network, Modbus RTU client, or both.

IMPORTANT
Other Modbus devices connected to the network communicating with the gateway must always be server devices.

The gateway supports communication with up to five Modbus TCP server devices.

For every defined point belonging to a particular Modbus TCP server device, a server address from 0 to 255 can also be freely configured. This feature offers great flexibility for installations. For example, when integrating several Modbus RTU server devices connected in a serial line, with an RTU/TCP converter on top of this serial line, it enables access to the RTU server points through TCP/IP. In this case, the RTU/TCP converter communicating in TCP identifies the destination of the point (server address in the RTU network) by the contents of the server address field.

Modbus TCP server devices are characterized by their IP address and predefined registers address map. This address map specifies the address, type, and characteristics of the Modbus server device's internal points (commonly called registers). These registers are accessible using the Modbus TCP protocol.

Communication parameters of the Intesis gateway (IP address, netmask, default router address, and TCP port) are fully configurable to adapt to any IP network and server device.

The Modbus TCP protocol defines different function code types to read/write different register types from the Modbus devices. It also defines different data formats to encode values.

Also, the data encoding used for 16 bits registers (big-endian or little-endian) can be configured in the Intesis gateway. This is the byte order for data encoding (MSB..LSB or LSB..MSB)[2]. Although specified as big-endian in the Modbus protocol specification, this data encoding varies depending on the manufacturer/type of server.

11.3.2. Points Definition

Every point defined in the Intesis gateway has the following Modbus features associated with it:

Feature	Description
Modbus device	Modbus TCP device to which belongs the point, from a list of Modbus TCP server devices that can be defined in the Intesis gateway (up to 5). For every defined Modbus TCP server device, a virtual signal is automatically created in the Intesis gateway to report the communication with the device. Like the rest of the points, this signal is also available from the field device interface.
Function code **Read func.** **Write func.**	01 Read Coils 02 Read Discrete Inputs 03 Read Holding Registers 04 Read Input Registers 05 Write Single Coil 15 Write Single Register 06 Write Multiple Coils 16 Write Multiple Register
#Bits	Number of bits to be used by this signal.
Data coding format	• 16/32/48/64 bits unsigned • 16/32/48/64 bits signed (one's complement – C1) • 16/32/48/64 bits signed (two's complement – C2) • 16/32/48/64 bits Float • 16/32/48/64 bits Bitfields • Error comm
Byte order	• Big-endian • Little-endian • Word inverted big-endian • Word inverted little-endian
Register address	The Modbus register address inside the server device for the point.
Bit inside the register	Bit inside the Modbus register (optional). The Intesis gateway allows bit decoding from generic 16 bits input/holding Modbus registers. **NOTICE** Some devices use the bit coding into 16 bit input/holding Modbus register to encode digital values. These registers are generally accessible using Modbus function codes 03 and 04 (read holding/input registers).

[2]MSB: most significant bit; LSB: less significant bit

12. BACnet Interface

12.1. General Description

BACnet is a solid standard with many detailed concepts, but for this manual purposes, we will focus on the two most fundamental concepts:

- BACnet client, which is the device that sends service requests to the server.
- BACnet server, which is the device that performs the requested service and reports the result back to the client.

BACnet server devices are represented in the form of *devices* holding *objects*. Usually, every physical device corresponds to a logical one. The objects can be of different types depending on the data and functionality they represent: Analog input, Analog output, Digital input, etc.

NOTE

- Output objects are meant to be written from the BACnet network to the device.
- Input objects are meant to offer status information on the BACnet device.
- Value objects are bidirectional.

Every object has different properties. The most meaningful one is the **Present_Value** property, which indicates the real value of the object. Also, the gateway uses this property to read and write values. Every object of the same type in a device is identified with its associated **object instance**.

12.2. BACnet Client

12.2.1. Description

The gateway implements a single BACnet object of its own: its BACnet Device Object, which contains its BACnet Device Identifier and basic properties of the gateway as a BACnet device (name, firmware version, etc.).

NOTICE
When acting as a client device, the Intesis gateway is classified under the device profile of a BACnet Application Specific Controller (B-ASC). For further details, check out the product website for the BACnet client PIC statements.

The gateway emulates a client device in the BACnet system.

These are the possible BACnet objects supported by the Intesis gateway:

Object Type	Property	Description
Analog Input	Present Value	Analog signal, for example, Ambient temperature
Analog Output	Present Value	Analog signal
Analog Value	Present Value	Analog signal, for example, Temperature set point value
Binary Input	Present Value	Digital signal, for example, ON/OFF status
Binary Output	Present Value	Digital signal, for example, ON/OFF command
Binary Value	Present Value	Digital signal, for example, ON/OFF status/ command
Multistate Input	Present Value	Multistate signal, for example, Working mode status
Multistate Output	Present Value	Multistate signal
Multistate Value	Present Value	Multistate signal, for example, Working mode command
Accumulator	Present Value	
Loop	Present Value	

Every signal is identified with its associated Device + Object Type + Object Instance.

IMPORTANT
Though BACnet/IP and BACnet MS/TP physical layers are supported, only one physical layer can be used at a time, i.e., if communicating to BACnet using BACnet/IP, BACnet MS/TP cannot be used, and vice versa.

NOTE
Using the configuration tool, it’s possible to scan the BACnet network for available devices and their objects, which can later be directly added to your configuration. This feature facilitates the configuration process, avoiding entering them manually.

12.2.2. Points Definition

Every point defined in the Intesis gateway has the following BACnet features associated with it:

Feature	Description
BACnet Device	BACnet device to which the point belongs (a list of 256 BACnet devices can be defined in the Intesis gateway). For every BACnet device defined, a virtual signal is created automatically in the gateway to report the communication status with the BACnet device. Like the rest of the points, this signal is also available from the KNX interface.
BACnet object type	• AI: Analog Input • AO: Analog Output • AV: Analog Value • DI: Digital Input • DO: Digital Output • DV: Digital Value • MI: Multistate Input • MO: Multistate Output • MV: Multistate Value • LOOP: Loop • ACUM: Accumulator **IMPORTANT** Please read the documentation of the BACnet devices you're willing to integrate to know their object types.
BACnet object instance	BACnet object instance for the point on the external BACnet device. **IMPORTANT** Please read the documentation of the BACnet devices you're willing to integrate to know their object types.

12.3. BACnet Server

12.3.1. Description

NOTICE
When the Intesis gateway acts as a server device, it is classified under the device profile of a BACnet Advanced Application Controller (B-AAC). For further details, check out the product website for the BACnet client PIC statements.

Using the Intesis MAPS configuration tool, you can configure the object type associated with the signal on the other protocol.

To facilitate the translation towards BACnet, the following object type options are available:

Object Type	ID
Analog-Input	0
Analog-Output	1
Analog-Value	2
Binary-Input	3
Binary-Output	4
Binary-Value	5
Calendar	6
Device	8
Multistate-Input	13
Multistate-Output	14
Multistate-Value	19
Notification-Class	15
Schedule	17
Trend-Log	20
Trend-Log-Multiple	27

Every signal of the Intesis gateway can have several objects. These objects and their properties can be configured with the configuration tool.

Depending on the field device protocol, you can define the signals using one of the following options:

- Configuring them manually for each or multiple signals at the time.
- Importing a file with the signals of the field devices.
- Scanning the network of the devices if this is supported.

Example 1. Signals compatibility

You can choose an object from the BACnet server column that is compatible with this signal. For example, a write signal in a KNX field device can be an input object type on the BACnet server side; a read and write object can be a value object type, etc.

NOTICE
The configuration tool provides default templates that make this signals assignment process easier. Also, you only have to click the **Check table** button on the bottom right corner of the window to know if everything is correct or if there's some mistake. The project is also automatically checked before you transfer it to the gateway.

All objects definition, BIBBs, and details about the implementation can be found on the BACnet server PICS on the product website.

12.3.2. BACnet/IP

The UDP communication port is the main setup parameter for BACnet/IP, besides basic IP settings (IP, netmask, default gateway). The Intesis gateway uses the 47808 (0xBAC0) port by default, which you can change through the configuration tool.

When using BACnet/IP, the gateway can also act as a foreign device to communicate with devices in another network domain. Alternatively, you can set it as a BBMD (Bacnet/IP Broadcast Management Device). This functionality facilitates the communication of devices placed in other networks with the devices in the gateway network.

IMPORTANT
BACnet/IP and BACnet MS/TP communication can not be used simultaneously.

12.3.3. BACnet MS/TP

When you choose BACnet MS/TP (serial communication), you have to use the Intesis MAPS configuration tool to associate the gateway with a MAC address within the MS/TP network segment.

Baud rates supported for MS/TP line are: 9600, 19200, 38400, 76800, 115200, or Autobauding (autodetect).

Standard wiring guidelines for EIA-485 apply to the BACnet MS/TP line.

IMPORTANT
BACnet MS/TP and BACnet/IP communication cannot be used simultaneously.

13. ASCII Interface

13.1. Description

The Intesis gateway can be connected to any ASCII-enabled device via its EIA-232, EIA-485, or TCP/IP (Ethernet) connectors, supervising and controlling its internal points through this interface by using simple ASCII messages.

When the gateway receives a new value for a point from the other protocol system, its ASCII interface sends the corresponding message indicating the new value to the ASCII system.

IMPORTANT

- This functionality is only possible if the point is configured to send these "spontaneous messages." If it doesn't, the new value will remain available in the gateway for a later poll of the ASCII system.
- You can configure this behavior for every gateway point through the configuration tool.

13.2. ASCII Serial

The ASCII interface and the ASCII master device serial connection type must be the same.

13.3. ASCII TCP

The Intesis gateway allows the configuration of:

- TCP port (5000 by default).
- IP address.
- Subnet mask.
- Default router address.

13.4. Address Map

The ASCII address map is fully configurable; any point in the gateway can be freely configured with the desired internal register address.

13.5. Points Definition

Every point defined in the gateway has the following ASCII features associated with it:

<table>
<tr><th>Feature</th><th colspan="4">Description</th></tr>
<tr><td>Signal</td><td colspan="4">Signal or point description. Only for information purposes at the user level.</td></tr>
<tr><td>ASCII string</td><td colspan="4">Defines the ASCII string that will be used to access this register.
Max. length: 32 characters</td></tr>
<tr><td rowspan="3">Read/Write</td><td colspan="4">Defines the current function (read, write, or both) to be used from the ASCII side with this register. It can’t be configured as it is directly set when selecting the current BACnet type object.</td></tr>
<tr><th>Function</th><th>Read</th><th>Write</th><th>Read/Write</th></tr>
<tr><td>BACnet object</td><td>Analog input
Binary input
Multistate input
Loop
Accumulator</td><td>Analog output
Binary output
Multistate output</td><td>Analog value
Binary value
Multistate value</td></tr>
<tr><td>Spontaneous</td><td colspan="4">Determines the creation and sending of an ASCII message when any point from the BACnet side changes its value.</td></tr>
<tr><td rowspan="3">A/D
(Analog/ Digital)</td><td colspan="4">Defines the current variable type for this register from the ASCII side. It can’t be configured as it is directly set when selecting the current BACnet type object.</td></tr>
<tr><th>Type</th><th>Analog</th><th colspan="2">Digital</th></tr>
<tr><td>BACnet object</td><td>Analog input
Analog output
Analog value
Multistate input
Multistate output
Multistate value
Loop
Accumulator</td><td colspan="2">Binary input
Binary output
Binary value</td></tr>
</table>

13.6. Messages

The ASCII side communicates through simple ASCII messages.

NOTE
You can configure these messages to match the ASCII master device using the configuration tool.

The ASCII messages used to read/write points have the following format:

Message to read a point value:

ASCII_String?\r

Where:

- **ASCII_String** is the string indicating the point address inside the Intesis gateway.
- **?** is the character used to indicate that this is a reading message (configurable with Intesis MAPS).
- **\r** is the carriage return character (HEX 0x0D, DEC 13).

Message to write a point value:

ASCII_String=vv\r

Where:

- **ASCII_String** is the string indicating the point address inside the Intesis gateway.
- **=** is the character used to indicate that this is a reading message (configurable with Intesis MAPS).
- **vv** is the current point value.
- **\r** is the carriage return character (HEX 0x0D, DEC 13).

Message about a point value: sent spontaneously when the Intesis gateway receives a change from the BACnet side or in response to a previous poll for the point.

ASCII_String=vv\r

Where:

- **ASCII_String** is the string indicating the point address inside the Intesis gateway.
- **=** is the character used to indicate where the point data starts.
- **vv** is the current point value.
- **\r** is the carriage return character (HEX 0x0D, DEC 13).

14. Mounting

IMPORTANT
Before mounting, please ensure that the chosen installation place preserves the gateway from direct solar radiation, water, high relative humidity, or dust.

IMPORTANT
Ensure the gateway has sufficient clearances for all connections when mounted. See Dimensions.

NOTE
Mount the gateway over a DIN rail, preferably inside a grounded metallic industrial cabinet.

DIN rail mounting

1. Fit the gateway's top-side clips in the upper edge of the DIN rail.
2. Press the low side of the gateway gently to lock it in the DIN rail.
3. Make sure the gateway is firmly fixed.

NOTE
For some DIN rails, to complete step 2, you may need a small screwdriver or similar to pull the bottom clip down.

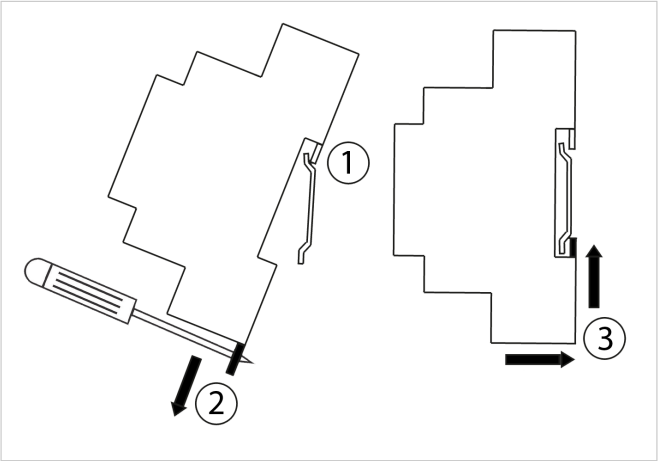

15. Connections

Please find in the following table the gateway's ports and their use depending on the configuration.

Configuration	Port A	Port B EIA-485	Port B EIA-232	Ethernet
IN-MBS-KNX	KNX	Modbus RTU	Modbus RTU	Modbus TCP and Console*
IN-KNX-MBM	KNX	Modbus RTU	NA	Modbus TCP and Console*
IN-BAC-KNX	KNX	BACnet MS/TP	NA	BACnet/IP and Console*
IN-KNX-BAC	KNX	BACnet MS/TP	NA	BACnet/IP and Console*
IN-ASCII-KNX	KNX	ASCII	ASCII	ASCII TCP and Console*

**Console: you can use the Ethernet port to connect the gateway to the PC for configuration purposes.*

The following table shows the pinout correspondence for each serial port.

Port A	Pin-out	Port B	Pin-out
A4	-	B1	A+
A3	+	B2	B-
A1 and A2	NA	B3	SNGD

15.1. Power Supply

NOTE
The way to supply power to the gateway is the same for all applications.

CAUTION
Before manipulating any equipment, including this gateway, ensure the system is disconnected from the power source.

The power supply connector is a green pluggable terminal block (three poles) labeled as **Power**.

IMPORTANT
- Use SELV-rated NEC class 2 or limited power source (LPS) power supply.
- Connect the gateway's ground terminal to the installation grounding.
- A wrong connection may cause earth loops that can damage the Intesis gateway and/or any other system equipment.

Apply the voltage within the admitted range and of enough power:

- **For DC**: 9 .. 36 VDC, Max: 260 mA
- **For AC**: 24 VAC (+/-10 %), 50-60 Hz, Max: 70 mA

Recommended voltage: 24 VDC, Max: 70 mA

IMPORTANT

- **When using a DC power supply:** Respect the polarity labeled on the power connector for the positive and negative wires.
- **When using an AC power supply:** Ensure the same power supply is not powering any other device.

Once powered, the Run LED of the gateway will turn on.

15.2. Connection Diagrams for each Application

Look for the appropriate diagram depending on your application:

Figure 6. KNX to Modbus server

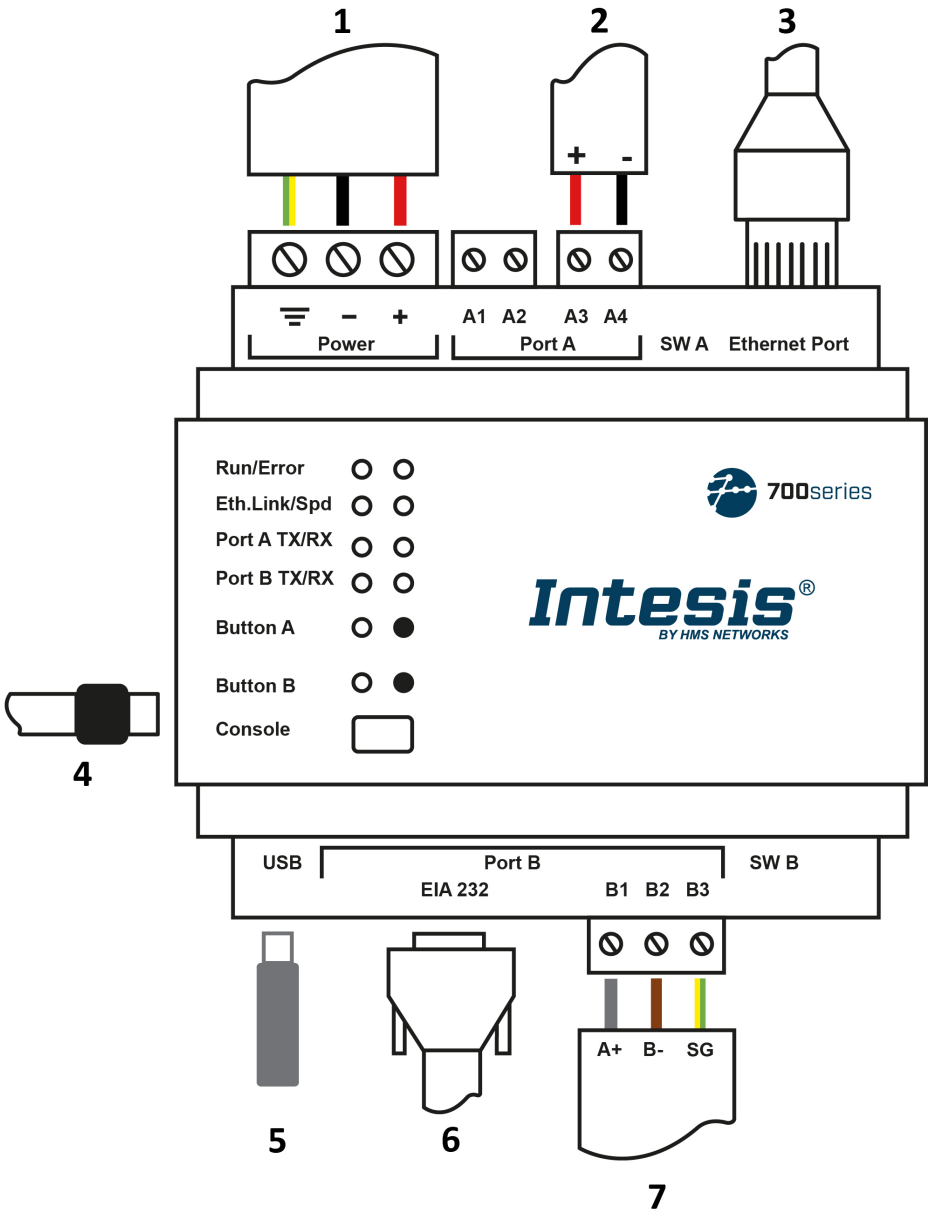

1. **Power Supply** (9-36 VDC / 24 VAC)
2. **KNX**
3. **Modbus TCP & Console**
4. **Console Port**
   USB Mini-B type
5. **USB storage**
6. **Modbus RTU EIA-232**
7. **Modbus RTU EIA-485**

Figure 7. Modbus client to KNX

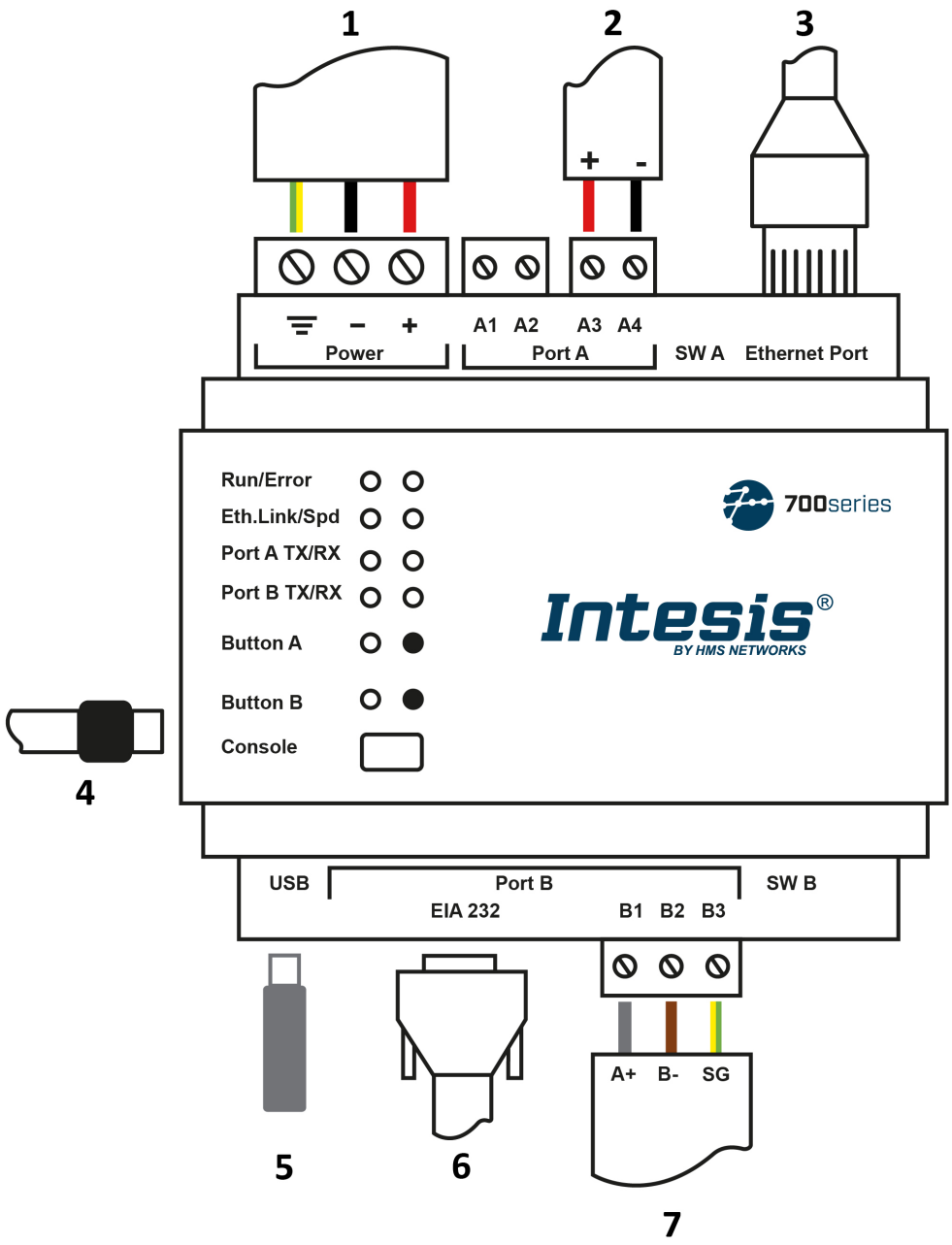

1. **Power Supply** (9-36 VDC / 24 VAC)
2. **KNX**
3. **Modbus TCP & Console**
4. **Console Port**
   USB Mini-B type
5. **USB storage**
6. **Not used**
7. **Modbus RTU EIA-485**

Figure 8. KNX to BACnet server

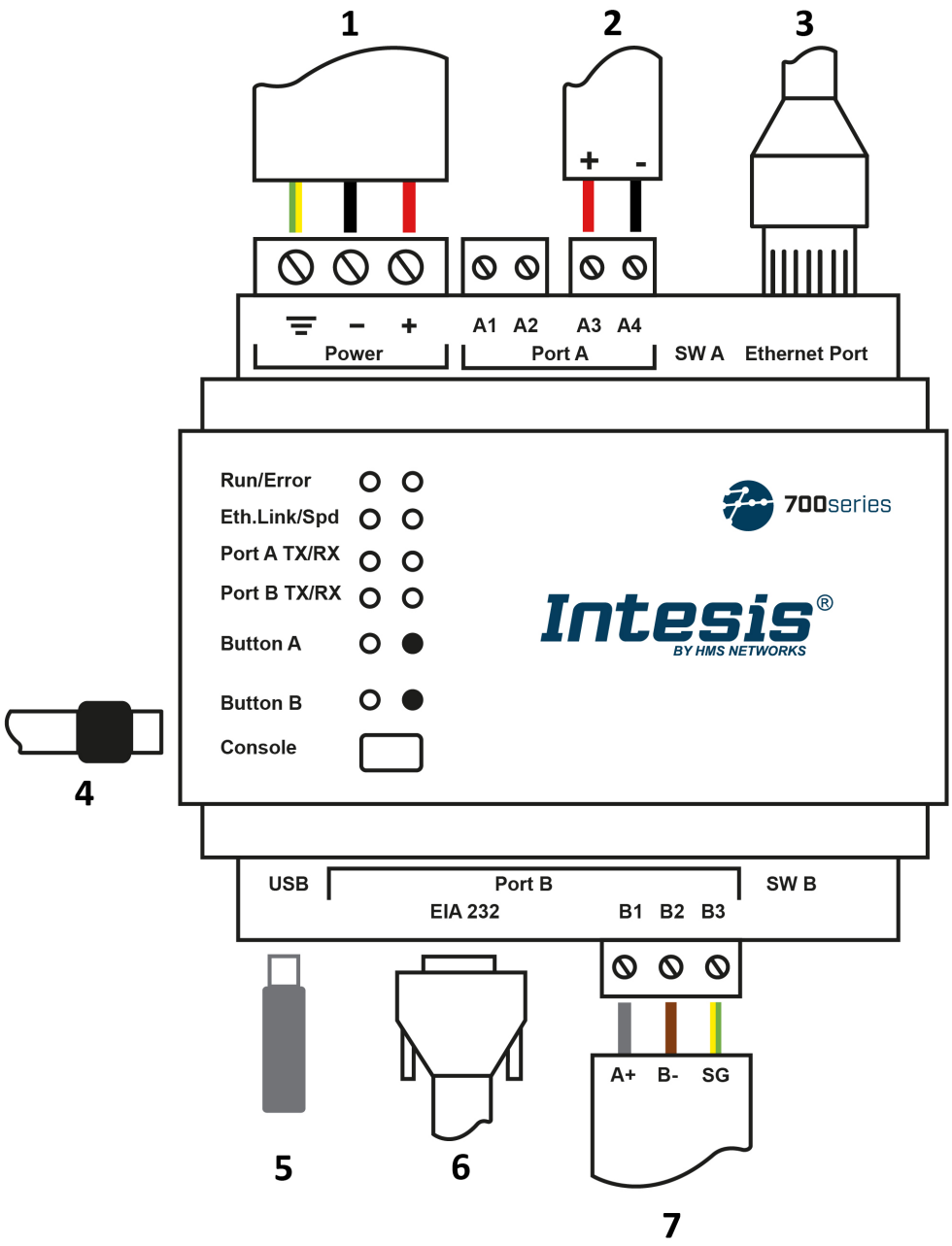

1. **Power Supply** (9-36 VDC / 24 VAC)
2. **KNX**
3. **BACnet/IP Console & Modbus TCP** (optional)
4. **Console Port**
   USB Mini-B type
5. **USB storage**
6. **Not used**
7. **BACnet MS/TP EIA-485**

Figure 9. BACnet client to KNX

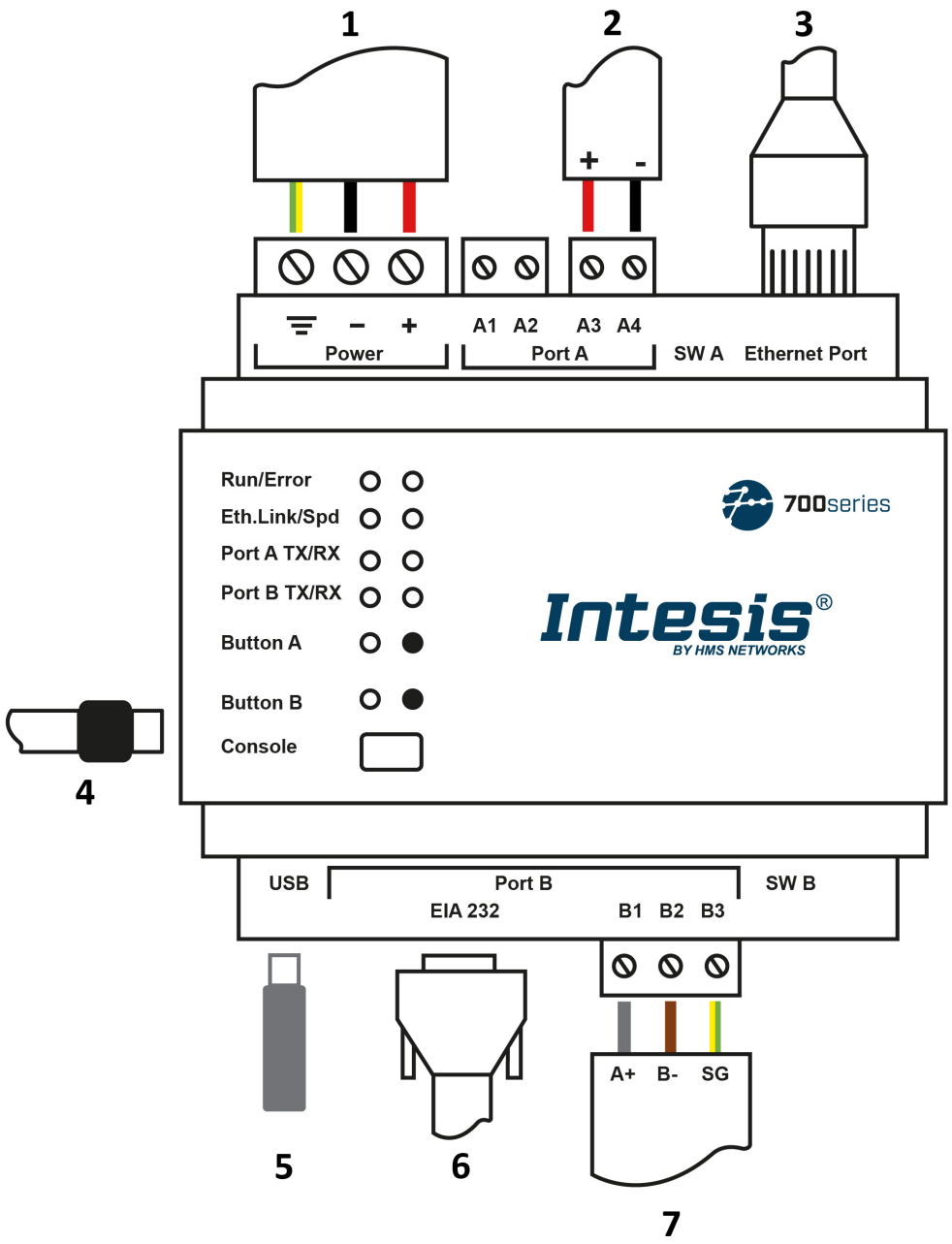

1. **Power Supply** (9-36VDC / 24VAC)
2. **KNX**
3. **BACnet/IP & Console**
4. **Console Port**
   Mini-Type B USB
5. **USB storage**
6. **Not used**
7. **BACnet MS/TP EIA-485**

Figure 10. KNX to ASCII

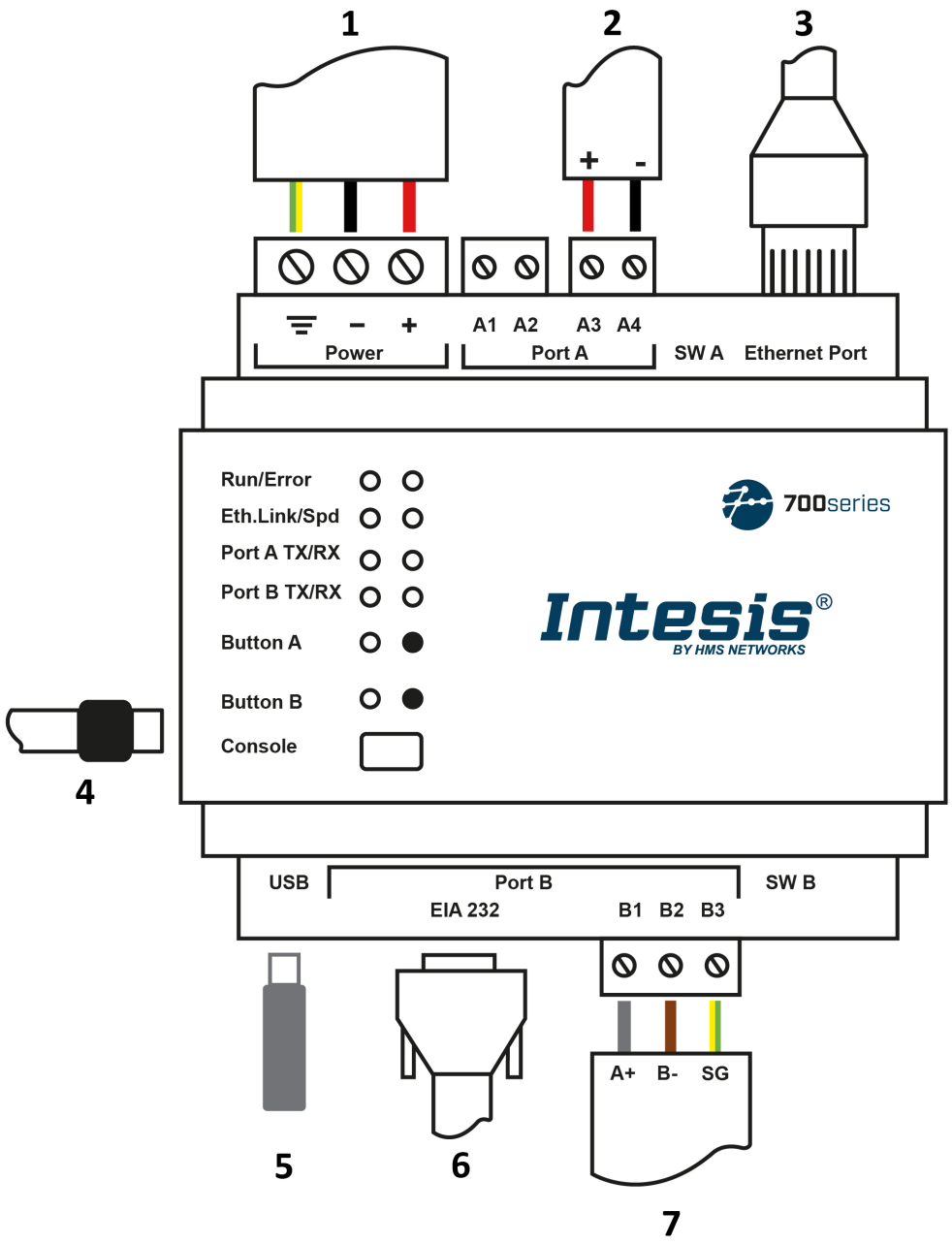

1. **Power Supply** (9-36 VDC / 24 VAC)
2. **KNX**
3. **ASCII TCP & Console**
4. **Console Port**
   USB Mini-B type
5. **USB storage**
6. **ASCII EIA-232**
7. **ASCII EIA-485**

15.3. Connection to KNX

NOTE
The way to connect the KNX bus to the gateway is the same for all applications.

- **Port A / KNX**

Connect the KNX bus to connectors A3 (+) and A4 (-) of the gateway's Port A.

IMPORTANT
Respect polarity.

15.4. Connection to BACnet

- **Ethernet connection for BACnet/IP**:
  Connect the BACnet/IP network to the Ethernet port of the gateway. The correct cable to use depends on where the gateway is connected:
  – Connecting directly to a BACnet/IP device: use a crossover Ethernet UTP/FTP CAT5 or higher cable.
  – Connecting to a hub or switch of the LAN of the building: use a straight Ethernet UTP/FTP CAT5 or higher cable.

IMPORTANT
If there is no response from the BACnet devices to the frames sent by the gateway:

– Check that they are operative and reachable from the network connection used by the gateway.
– Check the gateway Ethernet interface sending *Pings* to its IP address using a PC connected to the same Ethernet network.
– Contact the network admin to be sure there are no limitations regarding UDP communication or ports blocked.

IMPORTANT
If communicating through the LAN of the building, contact the network administrator and make sure traffic on the used port is allowed through all LAN paths.

NOTE
After powering up the Intesis gateway for the first time, DHCP will be enabled for 30 seconds. After that time, if a DHCP server provides no IP, the default IP 192.168.100.246 will be set.

- **Port B EIA-485 connection for BACnet MS/TP**:
  Connect the EIA-485 bus to connectors B1 (A+), B2 (B-), and B3 (SNGD) to the Port B of the gateway.

IMPORTANT
Respect the polarity.

IMPORTANT

Remember the characteristics of the standard EIA-485 bus:

- Maximum distance of 1200 meters.
- Maximum of 32 devices connected to the bus.
- A termination resistor of 120 Ω is needed at each end of the bus. The gateway has an internal bus biasing circuit already incorporating the termination resistor. It can be enabled using the DIP switches:
  - **Position 1**:
    ON: 120 Ω termination active.
    OFF: 120 Ω termination inactive.
  - **Position 2 and 3**:
    ON: Polarization active.
    OFF: Polarization inactive.

IMPORTANT

If the termination resistor is enabled and you install the gateway at one of the ends of the bus, do not install an additional termination resistor at that end.

15.5. Connection to Modbus

- **Ethernet port for Modbus TCP and Console connection**:
  Connect the communication cable from the Modbus TCP network to the Ethernet port of the gateway.

  IMPORTANT
  Use a straight Ethernet UTP/FTP CAT5 or higher cable.

  IMPORTANT
  If communicating through the LAN of the building, contact the network administrator and make sure traffic on the used port is allowed through all LAN paths.

  NOTE
  After powering up the Intesis gateway for the first time, DHCP will be enabled for 30 seconds. After that time, if a DHCP server provides no IP, the default IP 192.168.100.246 will be set.

- **Port B EIA-485 connection for Modbus RTU**:
  Connect the EIA-485 bus to connectors B1 (A+), B2 (B-), and B3 (SNGD) of the gateway's Port B.

  IMPORTANT
  Respect the polarity.

  IMPORTANT
  Remember the characteristics of the standard EIA-485 bus:

  - Maximum distance of 1200 meters.
  - Maximum of 32 devices connected to the bus.
  - A termination resistor of 120 Ω is needed at each end of the bus. The gateway has an internal bus biasing circuit already incorporating the termination resistor. It can be enabled using the DIP switches:
    - **Position 1**
      ON: 120 Ω termination active.
      OFF: 120 Ω termination inactive.
    - **Position 2 and 3**
      ON: Polarization active.
      OFF: Polarization inactive.
  - If the termination resistor is enabled and you install the gateway at one of the ends of the bus, do not install an additional termination resistor at that end.

- **Port B EIA-232**:
  Connect the serial cable EIA-232 from the external serial device to the EIA-232 connector of the gateway Port B.

  NOTE
  This is a DB9 male (DTE) connector that only uses the TX, RX, and GND.

  IMPORTANT
  Respect the maximum distance of 15 meters.

15.6. Connection to ASCII

- **Ethernet port for ASCII TCP**:
  Connect the communication cable from the ASCII TCP network to the Ethernet port of the gateway.

  IMPORTANT
  Use a straight Ethernet UTP/FTP CAT5 or higher cable.

  IMPORTANT
  If communicating through the LAN of the building, contact the network administrator and make sure traffic on the used port is allowed through all LAN paths.

  NOTE
  After powering up the Intesis gateway for the first time, DHCP will be enabled for 30 seconds. After that time, if a DHCP server provides no IP, the default IP 192.168.100.246 will be set.

- **Port B EIA-485 connection for ASCII serial**:
  Connect the EIA-485 bus to connectors B1 (A+), B2 (B-), and B3 (SNGD) to the Port B of the gateway.

  IMPORTANT
  Respect the polarity.

  IMPORTANT
  Remember the characteristics of the standard EIA-485 bus:

  - Maximum distance of 1200 meters.
  - Maximum of 32 devices connected to the bus.
  - A termination resistor of 120 Ω is needed at each end of the bus. The gateway has an internal bus biasing circuit already incorporating the termination resistor. It can be enabled using the DIP switches:
    - **Position 1**:
      ON: 120 Ω termination active.
      OFF: 120 Ω termination inactive.
    - **Position 2 and 3**:
      ON: Polarization active.
      OFF: Polarization inactive.
  - If the termination resistor is enabled and you install the gateway at one of the ends of the bus, do not install an additional termination resistor at that end.

- **Port B EIA-232 for ASCII serial**:
  Connect the serial cable EIA-232 from the external serial device to the EIA-232 connector of the gateway Port B.

  NOTE
  This is a DB9 male (DTE) connector that only uses the TX, RX, and GND.

  IMPORTANT
  Respect the maximum distance of 15 meters.

15.7. Console and USB Connections

- **Console port**:
  Connect a USB Mini-B type cable from the gateway console port to a computer running the configuration tool.

  NOTICE
  With this software tool, you can configure and monitor the gateway.

  NOTE
  If your computer has an Ethernet port, you can also use the **Ethernet** port of the gateway to connect both.

- **USB port**:

  TIP
  You can connect a USB storage device to the USB port of the gateway to store logs.

  IMPORTANT
  The USB port doesn't support HDD devices.

16. Set-up Process with the Configuration Tool

16.1. Prerequisites

For this integration, you need:

- The items delivered by HMS Networks:
  - The Intesis IN701KNX∗∗∗0000 protocol translator gateway.
  - A mini-type B USB to USB cable.
  - Link to download the configuration tool.
  - Product documentation.
- An operative KNX installation or device well connected to the KNX port A of the Intesis gateway.
- The respective client or server devices connected to either the EIA-485/EIA-232 Port B or to the Ethernet port.

16.2. Intesis MAPS: Configuration and Monitoring Tool

16.2.1. Introduction

To configure the gateway, you need a PC running Intesis MAPS. You can download this configuration tool from https://www.intesis.com/products/intesis-maps#download.

Intesis MAPS is a Windows® compatible software explicitly developed to monitor and configure Intesis gateways.

NOTE
The following sections provide some primary and general information to configure this gateway. Although Intesis MAPS is an easy-to-manage user-friendly tool, you may need more specific and comprehensive information about the different parameters and how to configure them. If so, please refer to these specific Intesis MAPS user manuals depending on the protocol you are working with:

- KNX
- BACnet
- Modbus

NOTICE
The Intesis MAPS user manual referring to ASCII protocol will come soon.

16.2.2. Template Selection

When opening the software, you will see the main window, called **Getting started**. Here you can select the template for your application:

1. Click **Create New Project** in the left menu.
2. Select the appropriate template for your application. To filter the selection:
   - Click on the protocol logos.
   - Type the order code in the **Order Code** field,
   - Check out the list to find the template you need.

Figure 11. The three possibilities for the template selection

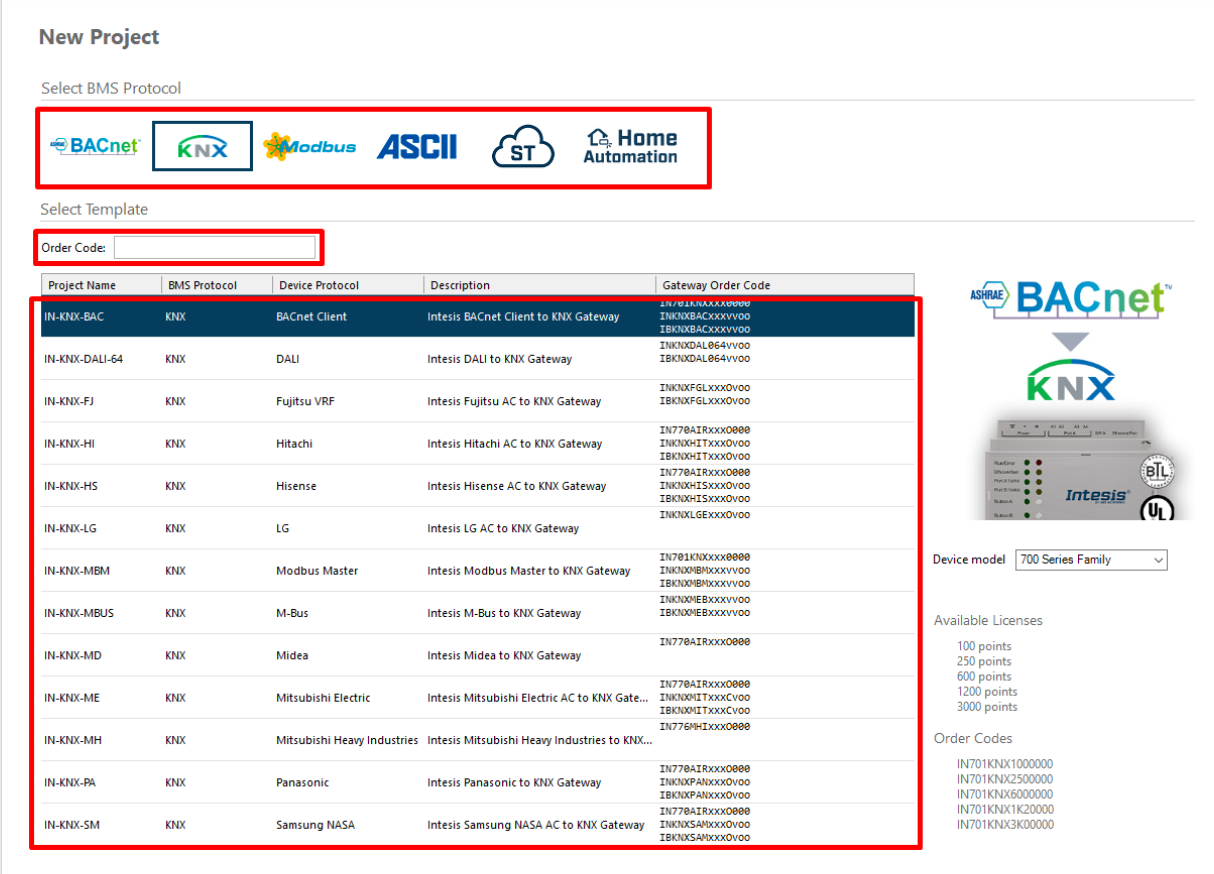

3. Select the template and click **Next** or double-click it in the list.

16.2.3. Connection Tab

1. Connect the gateway to your PC.
   - Use the gateway's **Ethernet port** and an Ethernet CAT5 or higher cable.
   - Use the **Console** port and a USB Mini-B type to USB A type cable.
2. On the **Connection Type** parameter, select the way you connected the gateway to your PC:
   - Select **IP** if you are using the **Ethernet port** of the Intesis gateway.

     NOTICE
     The default password when connecting via IP is **admin**.

     IMPORTANT
     Make sure you have an internet connection.

     NOTE
     When using the IP connection, the gateway's name appears:

     – **In black**: It is compatible with the selected template.
     – **In red**: It is not compatible with the selected template.

   - Select **USB Port** if you are using the **Console** port of the gateway.

     NOTICE
     No password is needed when connecting via USB.

3. Select your gateway from the **Discovered Gateways** list on the left.
4. Click **Connect**.

NOTE
If your Intesis gateway firmware doesn't match the selected template, a pop-up window will prompt you to download the correct firmware.

When selecting IP as the connection type, two additional buttons will appear:

- **Identify**: Click the **Identify** button to make the gateway's LEDs blink for 10 seconds.
- **Edit**: Click the **Edit** button to open the **Config IP settings** window.

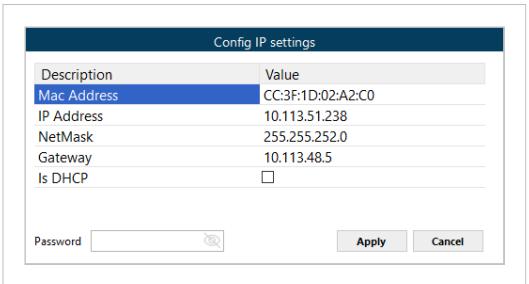

You can edit the **IP Address**, **NetMask**, and Default **Gateway** IP.

NOTE
These parameters can also be edited in the **Configuration** tab. See Connection.

16.2.4. Configuration Tab

In the Configuration tab, you can configure general parameters and parameters for both protocol interfaces of the Intesis gateway.

On the left side of the window, three submenus are shown:

- Submenu 1: **General** configuration parameters for the gateway.
- Submenus 2 and 3: BMS and Device respective protocols configuration parameters.

16.2.5. Signals Tab

This menu lists all available KNX signals and the parameters for the other side's protocol.

NOTE
You can find more information on every parameter and how to configure it in the Intesis MAPS user manual:

- Modbus
- KNX
- BACnet

Below the list of signals, these options are available:

- **Active signals**: Number of active signals in the list / Total number of signals in the list.
- **Hide Disabled signals**: Hide all disabled signals from the list (disabled by default).
- **Edit Columns**: Click this button to hide/show any column of the list.
- **Import**: Click this button to import the signals' configuration from an XLSX file. These signals can be added to the existing ones or replace them.
- **Export**: Click this button to export the current signals' configuration to an XLSX file.
- **AA**: Increases or decreases the font size.
- Click the **Check table** button to review the signals' configuration.

NOTE
If any parameter on any signal is wrong, a message will pop up with specific information about the error.

16.2.6. Receive/Send Tab

Send:

Once you have finished setting the parameters, you have to send the configuration to the gateway:

1. Click the **Send** button.
   a. If the gateway is still factory-set, you will be prompted to save the project on your PC. Once saved, the configuration is automatically sent to the gateway.
   b. If you have already saved the project, the configuration is automatically sent to the gateway.
2. Connect again with the gateway after sending the file.

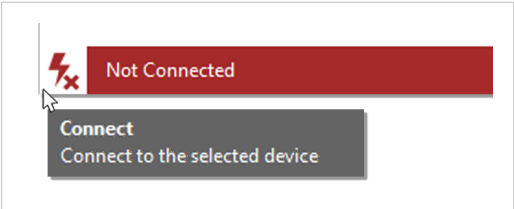

NOTICE
The gateway reboots automatically once the new configuration is loaded. This process may take a few seconds.

Receive:

Use this function to load the configuration of a gateway to Intesis MAPS.

> **TIP**
> This function may be helpful when you need to change some parameters of an already configured gateway.

Once the configuration is completed and sent, the gateway is already operative. Even so, you should review that everything works correctly by entering the **Diagnostic** tab.

16.2.7. Diagnostic Tab

IMPORTANT
Connection with the gateway is required to use the diagnostic tools.

Figure 12. Diagnostic tab window. Find the ToolBox between the upper tabs bar and the Console view. Below it, from left to right: Console viewer, Protocol viewers (one above the other), and the Signals viewer

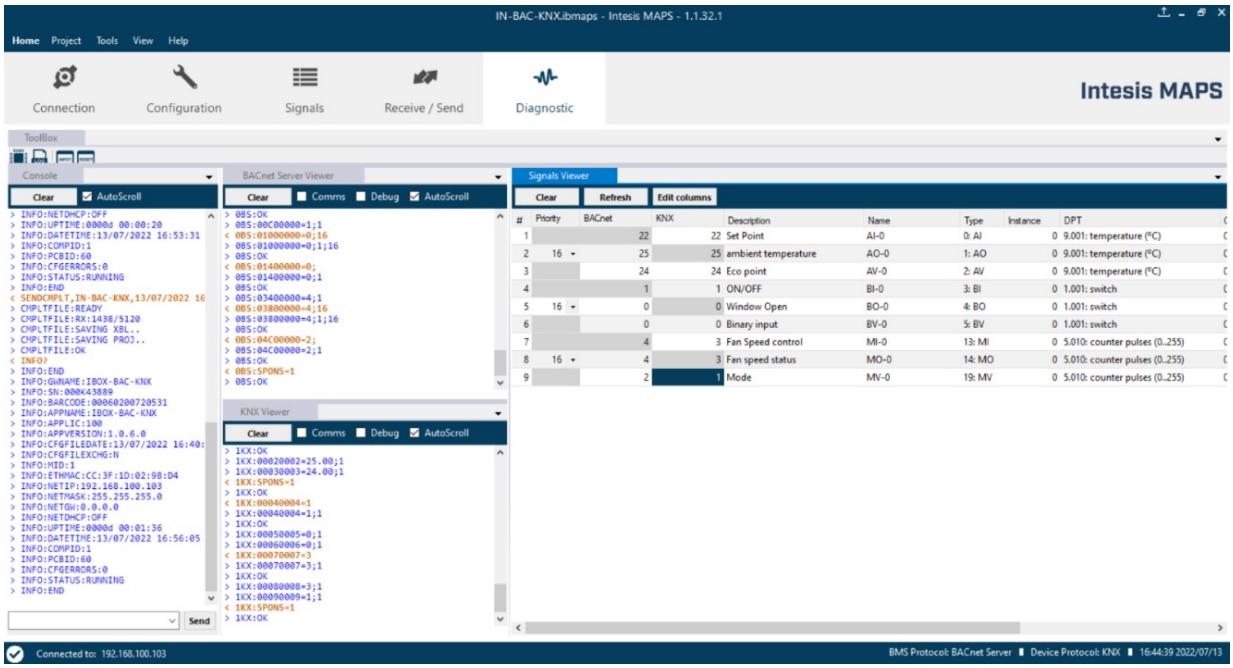

ToolBox:

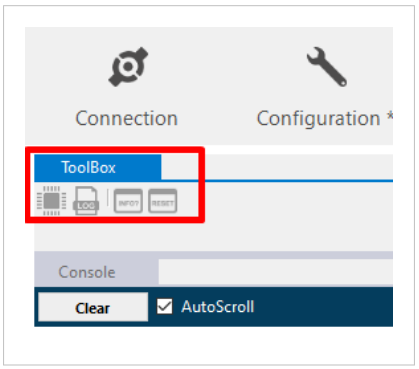

Use the tools section to:

- **Microprocessor icon**: Check the current hardware status of the gateway.
- **LOG**: Set Intesis MAPS in logging mode to record all the information present in the viewers and save it in a .zip file.
- **INFO?**: Get some gateway information.
- **RESET**: Reset the gateway.

NOTE
Depending on your screen resolution, the **ToolBox** icons may appear partially hidden behind the **Viewers** window.

Viewers:

Intesis MAPS provides several viewers:

- A generic console viewer for general information about communications and the gateway status.
- A viewer for both protocols to check their current status.
- A signals viewers to simulate the BMS behavior or check the system's current values.

The layout of these viewers can be modified:

- Using the **Select Diagnostics View** option from the **View** menu:

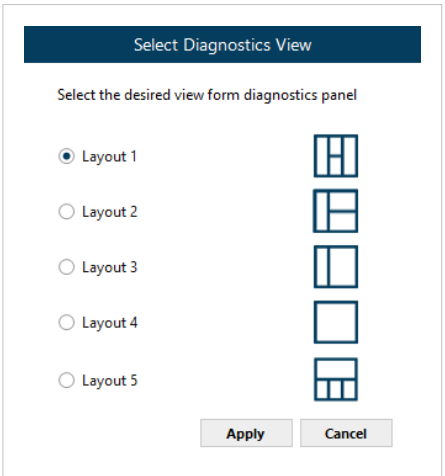

NOTE
Layouts 3 and 4 offer two different tabbed options:

  – Fixed console to the left and tabbed browser for the other viewers
  – Full tabbed browser

- Clicking and dragging the border of a viewer. To do so, place the cursor over the edge of a viewer. On the vertical edges, the cursor changes to ↔ to allow the adjustment of the width, and on the horizontal edges, the cursor changes to ↕ to allow the adjustment of the height.

17. Technical Specifications

Housing	Plastic, type ABS (UL 94 V-0) / Color: light grey. RAL 7035
Mounting	DIN rail EN60715 TH35
Terminal blocks wiring	Solid wires or stranded wires (twisted or with ferrule) are allowed. Per terminal: Millimeters: One core: 0.5 .. 2.5 mm2 / Two cores: 0.5 .. 1.5 mm2 / Three cores: not allowed Gauge: One core: 24 .. 11 AWG / Two cores: 24 .. 15 AWG / Three cores: not allowed
Power	1 x green pluggable terminal block (3 poles) Ground, negative, and positive • For DC: 9 to 36 VDC, Max: 180 mA • For AC: 24 VAC +/-10 %, 50-60 Hz, Max: 70 mA Recommended: 24 VDC, Max: 70 mA
Ethernet	1 x Ethernet RJ45 10/100BASE-T
Port A	1 x KNX orange pluggable terminal block (2 poles) • A+, B- 2500 VDC isolation from other ports / KNX power consumption: 5 mA / Voltage rating: 29 VDC 1 x green pluggable terminal block (2 poles) (reserved for future use)
SW A	1 x DIP switch for Port A configuration (reserved for future use)
Port B	1 x serial EIA-232 DB9 male Pinout from a DTE device / 1500 VDC isolation from other ports (except Port B: EIA-485) 1 x serial EIA-485 green pluggable terminal block (3 poles) • A+, B-, SGND (reference ground or shield) 1500 VDC isolation from other ports (except Port B: EIA-232)
SW B	1 x DIP switch (3 position) for serial EIA-485 configuration: Position 1: • ON: 120 Ω termination active • OFF: 120 Ω termination inactive Position 2 and 3: • ON: polarization active • OFF: polarization inactive (default)
Battery	Type: Manganese Dioxide Lithium button battery / Size: 20 mm x 3.2 mm (0.79" x 0.13") / Capacity 3 V - 255 mA
Console port	USB Mini-B type 2.0 compliant / 1500 VDC isolation
USB port	USB A type 2.0 compliant / Only for USB flash storage devices (USB pen drive) / HDD connection not allowed / Power consumption limited to 150 mA
Push buttons	A and B buttons: Factory reset
Operational conditions	Before serial number 000R05920, Temperature: 0… 60°C / 32.. 140°F After serial number 000R05920 (included), Temperature: -10… 60°C / 14.. 140°F Humidity: 5 .. 95% (No condensation)
LED indicators	10 x Onboard LED indicators: 1 x Power / 1 x Error / 2 x Ethernet / 2 x Port A / 2 x Port B / 1 x Button A / 1 x Button B

18. Dimensions

- **Net dimensions (HxWxD)**
  Millimeters: 90 x 88 x 58 mm
  Inches: 3.54 x 3.46 x 2.28"
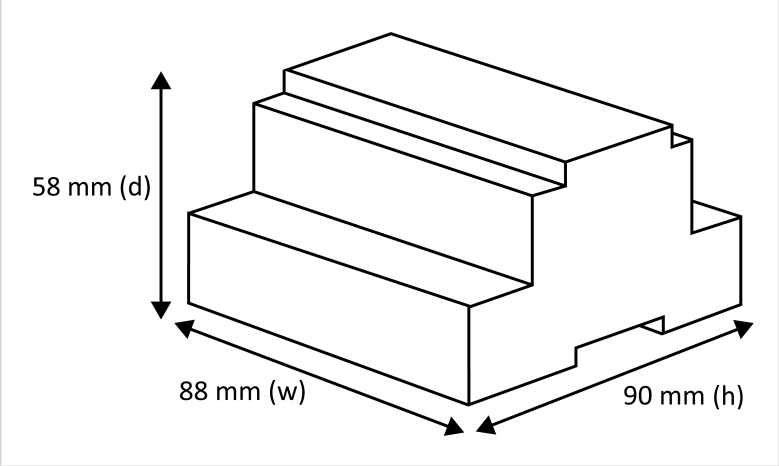
IMPORTANT
Leave enough clear space to wire the gateway easily and for the subsequent manipulation of elements.