Installation Manual

For Decorative Panel

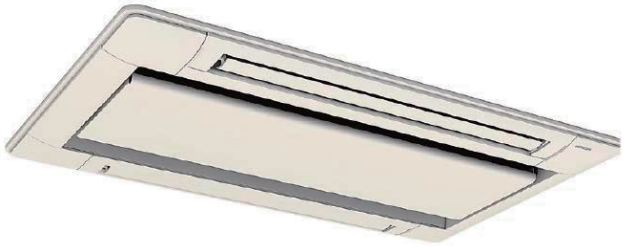

Model: P-AP90DNA

IMPORTANT:

READ AND UNDERSTAND THIS MANUAL BEFORE USING THIS DECORATIVE PANEL. KEEP THIS MANUAL FOR FUTURE REFERENCE.

P5415763

1. Introduction

Read following sections carefully before installing this optional decorative panel.

Read over the "Installation and Maintenance Manual" for the outdoor and indoor units as well.

Forward this information, and the warranty to all installers and users. Ask end users to maintain copies for future reference.
(Unit Installation) > (Refrigerant Piping Work) > (Electrical Wiring Work) > (Test Run) > (User)

Important Notice

- Johnson Controls, Inc. pursues a policy of continuing improvement in design and performance in its products. As such, Johnson Controls reserves the right to make changes at any time without prior notice.
- Johnson Controls cannot anticipate every possible circumstance that might involve a potential hazard.
- This heat pump air conditioning unit is designed for standard air conditioning applications only. Do not use this unit for anything other than the purposes for which it was intended.
- The installer and system specialist shall safeguard against leakage in accordance with local pipefitter and electrical codes. The following standards may be applicable, if local regulations are not available. International Organization for Standardization: (ISO 5149 or European Standard, EN 378). No part of this manual may be reproduced in any way without the expressed written consent of Johnson Controls.
- This heat pump air conditioning unit will be operated and serviced in the United States of America and comes with a full complement of the appropriate Safety, Dangers, Cautions, and Warnings.
- If you have questions, please contact your distributor or contractor.
- This manual provides common descriptions, basic and advanced information to maintain and service this heat pump air conditioning unit which you operate as well for other models.

This manual should be considered as a permanent part of the air conditioning equipment and should remain with the air conditioning equipment.

Product Inspection upon Arrival

1. Upon receiving this product, inspect it for any damages incurred in transit. Claims for damage, either apparent or concealed, should be filed immediately with the shipping company.
2. Check the model number, electrical characteristics (power supply, voltage, and frequency rating), and any accessories to determine if they agree with the purchase order.
3. The standard utilization for this unit is explained in these instructions. Use of this equipment for purposes other than what it is designed for is not recommended.
4. Please contact your local agent or contractor as any issues involving installation, performance, or maintenance arise. Liability does not cover defects originating from unauthorized modifications performed by a customer without the written consent of Johnson Controls, Inc. Performing any mechanical alterations on this product without the consent of the manufacturer will render your warranty null and void.

2. Important Safety Instructions

Signal Words	
⚠ WARNING	Indicates a hazardous situation that, if not avoided, could result in death or serious injury.
⚠ CAUTION	Indicates a hazardous situation that, if not avoided, could result in minor or moderate injury.
NOTICE	Indicates information considered important, but not hazard-related (for example, messages relating to property damage).

General Precautions

⚠ WARNING	To reduce the risk of serious injury or death, read these instructions thoroughly and follow all warnings or cautions included in all manuals that accompanied the product and are attached to the unit. *Refer back to these safety instructions as needed.*

- This system should be installed by personnel certified by Johnson Controls, Inc. Personnel must be qualified according to local, state and national building and safety codes and regulations. Incorrect installation could cause leaks, electric shock, fire or explosion. In areas where Seismic ''Performance requirements are specified, the appropriate measures should be taken during installation to guard against possible damage or injury that might occur in an earthquake if the unit is not installed correctly, injuries may occur due to a falling unit.
- Use appropriate Personal Protective Equipment (PPE), such as gloves and protective goggles and, where appropriate, have a gas mask nearby. Also use electrical protection equipment and tools suited for electrical operation purposes. Keep a quenching cloth and a fire extinguisher nearby during brazing. Use care in handling, rigging, and setting of bulky equipment.
- When transporting, be careful when picking up, moving and mounting these units. Although the unit may be packed using plastic straps, do not use them for transporting the unit from one location to another. Do not stand on or put any material on the unit. Get a partner to help, and bend with your knees when lifting to reduce strain on your back. Sharp edges or thin aluminum fins on the air conditioner can cut fingers, so wear protective gloves.
- Do not touch or adjust any safety devices inside the indoor or outdoor units. All safety features, disengagement, and interlocks must be in place and functioning correctly before the equipment is put into operation. If these devices are improperly adjusted or tampered with in any way, a serious accident can occur. Never bypass or jump-out any safety device or switch.
- Johnson Controls will not assume any liability for injuries or damage caused by not following steps outlined or described in this manual. Unauthorized modifications to Johnson Controls products are prohibited as they…
  - May create hazards which could result in death, serious injury or equipment damage;
  - Will void product warranties;
  - May invalidate product regulatory certifications;
  - May violate OSHA standards;

NOTICE	Take the following precautions to reduce the risk of property damage.

- Be careful that moisture, dust, or variant refrigerant compounds not enter the refrigerant cycle during installation work. Foreign matter could damage internal components or cause blockages.
- If air filters are required on this unit, do not operate the unit without the air filter set in place. If the air filter is not installed, dust may accumulate and breakdown may result.
- Do not install this unit in any place where silicon gases can coalesce. If the silicon gas molecules attach themselves to the surface of the heat exchanger, the finned surfaces will repel water. As a result, any amount of drainage moisture condensate can overflow from the drain pan and could run inside of the electrical box, possibly causing electrical failures.

- When installing the unit in a hospital or other facility where electromagnetic waves are generated from nearby medical and/or electronic devices, be prepared for Electromagnetic Interference (EMI). Do not install where the waves can directly radiate into the electrical box, controller cable, or controller. Inverters, appliances, high-frequency medical equipment, and radio communications equipment may cause the unit to malfunction. The operation of the unit may also adversely affect these same devices. Install the unit at least 10 ft. (3m) away from such devices.
- When a wireless controller is used, locate at a distance of at least 3.3 ft. (1m) between the indoor unit and electric lighting. If not, the receiver part of the unit may have difficulty receiving operation commands.
- Do not install the unit in any location where animals and plants can come into direct contact with the outlet air stream. Exposure could adversely affect the animals and plants.
- Do not install the unit with any downward slope to the side of the drain boss. If you do, you may have drain water flowing back which may cause leaks.
- Be sure the drain hose discharges water properly. If connected incorrectly, it may cause leaks.
- Do not install the unit in any place where oil can seep onto the units, such as table or seating areas in restaurants, and so forth. For these locations or social venues, use specialized units with oil-resistant features built into them. In addition, use a specialized ceiling fan designed for restaurant use. These specialized oil-resistant units can be ordered for such applications. However, in places where large quantities of oil can splash onto the unit, such as a factory, even the specialized units cannot be used. These products should not be installed in such locations.

Installation Precautions

⚠ WARNING	To reduce the risk of serious injury or death, the following installation precautions must be followed.

- When installing the unit into…
  - A wall: Make sure the wall is strong enough to hold the unit's weight. It may be necessary to construct a strong wood or metal frame to provide added support.
  - A room: Properly insulate any refrigerant tubing run inside a room to prevent "sweating" that can cause dripping and water damage to wall and floors.
  - Moist or uneven locations: Use a raised concrete pad or concrete blocks to provide a solid, level foundation for the unit to prevent water damage and abnormal vibration.
  - An area with high winds: Securely anchor the outdoor unit down with bolts and a metal frame. Provide a suitable air baffle.
  - A snowy area: Install the outdoor unit on a raised platform that is higher than drifting snow. Provide snow vents.
- Do not install the unit in the following places. Doing so can result in an explosion, fire, deformation, corrosion, or product failure.
  - Explosive or flammable atmosphere
  - Where a fire, oil, steam or powder can directly enter the unit, such as nearby or above a kitchen stove.
  - Where oil (including machinery oil) may be present.
  - Where corrosive gases such as chlorine, bromine or sulfide can accumulate, such as near a hot tub or hot spring.
  - Where dense, salt-laden airflow is heavy, such as in coastal regions.
  - Where the air quality is of high acidity.
  - Where harmful gases can be generated from decomposition.
- Do not install the decorative panel with motion sensor in the following places. It may cause failure or deterioration of the sensor.
  - Ambient temperature changes drastically.
  - Where excessive force or vibration is applied to the sensor.
  - Where static electricity or electromagnetic waves may generate.
  - Where there is interference of infrared light such as gasses or mist is in the detecting area.
  - Where the lens for the sensor is exposed to high temperatures and humidity for a long time.
  - Where fluid and corrosive gases exist.
  - Where light such as sunlight or direct light affects the sensor.
  - Where hot air from a heater or something similar directly affects the sensor.
  - Where the airflow returns to the sensor by bouncing off obstacles such as a shelf or locker.

- Where blower devices such as a ceiling fan or ventilating fan affects the airflow from the indoor unit.
- Where weather directly affects the surface of the sensor.
- Where the lens surface may smudge or be damaged such as from a dusty environment.

  Detecting function will decrease if the sensor lens smudges.
  In this case, wipe off smudges using a soft cloth or cotton swab soaked with alcohol. Isopropyl alcohol is recommended. (When wiping off smudges on the sensor lens, do not apply excessive force. If excessive force is applied, the resin lens may be damaged and this may cause malfunctions such as misdetection or undetectable motion.)

- Do not position the drain pipe for the indoor unit near any sanitary sewers where corrosive gases may be present. If you do, toxic gases can seep into breathable air spaces and can cause respiratory injuries. If the drain pipe is installed incorrectly, water leakage and damage to the ceiling, floor, furniture, or other possessions may result. If the drain pipe becomes clogged, water may drip from the indoor unit. Do not install the indoor unit where such dripping can cause moisture damage such as uneven locations. Use a raised concrete pad or concrete blocks to provide a solid, level foundation for the unit to prevent water damage and abnormal vibration.
- Before performing any brazing work, be sure that there are no flammable materials or open flames nearby.
- Perform a test run to ensure normal operation. Safety guards, shields, barriers, covers, and protective devices must be in place while the compressor/unit is operating. During the test run, keep fingers and clothing away from any moving parts.
- Clean up the site when finished, remembering to check that no metal scraps or bits of wiring have been left inside the unit being installed.

After installation work for the system has been completed, explain the “Safety Precautions,” use, and maintenance of the unit to the customer according to the information in all manuals that accompanied the system. All manuals and warranty information must be given to the user or left near the Indoor Unit.

Refrigerant Precaution

⚠ WARNING	To reduce the risk of serious injury or death, the following refrigerant precautions must be followed.

- As originally manufactured, this unit contains refrigerant installed by Johnson Controls. Johnson Controls uses only refrigerants that have been approved for use in the unit’s intended home country or market. Johnson Controls' distributors similarly are only authorized to provide refrigerants that have been approved for use in the countries or markets they serve. The refrigerant used in this unit is identified on the unit’s faceplate and/or in the associated manuals. Any additions of refrigerant into this unit must comply with the country’s requirements with regard to refrigerant use and should be obtained from Johnson Controls' distributors. Use of any non-approved refrigerant substitutes will void the warranty and will increase the potential risk of injury or death.
- If installed in a small room, take measures to prevent the refrigerant from exceeding the maximum allowable concentration in the event that refrigerant gases should escape. Refrigerant gases can cause asphyxiation (0.026 lbs/ft^3 (0.42 kg/m^3) based on ISO 5149 for R410A). Consult with your distributor for countermeasures (ventilation system and so on). If refrigerant gas has leaked during the installation work, ventilate the room immediately.
- Before installation is complete, make sure that the refrigerant leak test has been performed. If refrigerant gases escape into the air, turn OFF the main switch, extinguish any open flames and contact your service contractor. Refrigerant (fluorocarbon) for this unit is odorless. If the refrigerant should leak and come into contact with open flames, toxic gas could be generated. Also, because the fluorocarbons are heavier than air, they settle to the floor, which could cause asphyxiation.
- When installing the unit, and connecting refrigerant piping, keep all piping runs as short as possible, and make sure to securely connect the refrigerant piping before the compressor starts operating. If the refrigerant piping is not connected and the compressor activates with the stop valve opened, the refrigerant system will be subjected to extremely high pressure, which can cause an explosion or fire.
- Tighten the flare nut with a torque wrench in the specified manner. Do not apply excessive force to the flare nut when tightening. If you do, the flare nut can crack and refrigerant leakage may occur.

- A compressor/unit comprises a pressurized system. Never loosen threaded joints while the system is under pressure and never open pressurized system parts.
- When maintaining, relocating, or disposing of the unit, dismantle the refrigerant piping after the compressor stops.

Electrical Precautions

⚠ WARNING	Take the following precautions to reduce the risk of electric shock, fire or explosion resulting in serious injury or death.

- Highly dangerous electrical voltages are used in this system. Carefully refer to the wiring diagram and these instructions when wiring. Improper connections and inadequate grounding can cause serious injury or death.
- Before servicing, open and tag all disconnect switches. Never assume electrical power is disconnected. Check with a meter and equipment and tools suited for this installation.
- Only use electrical protection equipment and tools suited for this installation.
- Use specified cables between units.
- Communication cabling shall be a minimum Communication cabling shall be a minimum of AWG18 (0.82mm^2), 2-Conductor, Stranded Copper. Shielded cable must be considered for applications and routing in areas of high EMI and other sources of potentially excessive electrical noise to reduce the potential for communication errors. When shielded cabling is applied, proper bonding and termination of the cable shield is required as per Johnson Controls guidelines. Plenum and riser ratings for communication cables must be considered per application and local code requirements.
- The polarity of the input terminals is important, so be sure to match the polarity when using contacts that have polarity.
- Use an exclusive power supply for the air conditioner at the unit's rated voltage.
- Be sure to install circuit breakers (ground fault interrupter, isolating switch, molded case circuit breaker and so on), with the specified capacity. Ensure that the wiring terminals are tightened securely to recommended torque specifications.
- Clamp electrical wires securely with a cable clamp after all wiring is connected to the terminal block. In addition, run wires securely through the wiring access channel.
- When installing the power lines, do not apply tension to the cables. Secure the suspended cables at regular intervals, but not too tightly.
- Make sure that the terminals do not come into contact with the surface of the electrical box. If the terminals are too close to the surface, it may lead to failures at the terminal connection.
- Turn OFF and disconnect the unit from the power supply when handling the service connector. Do not open the service cover or access panel to the indoor or outdoor units without turning OFF the main power supply.
- Before installing a controller or remote devices, ensure that the indoor and outdoor units operation has been stopped. Be sure to wait at least five minutes before turning off the main power switch. Otherwise, water leakage or electrical breakdown may result. Disconnect the power supply completely before attempting any maintenance for electrical parts. Check to ensure that no residual voltage is present after disconnecting the power supply.
- Do not clean with, or pour water into, the controller as it could cause electric shock and/or damage the unit. Do not use strong detergent such as a solvent. Clean with a soft cloth.
- Check that the ground wiring is securely connected. Do not connect ground wiring to gas piping, water piping, lighting conductor, or telephone ground wiring.
- If a circuit breaker or fuse is frequently activated, shut down the system and contact your service contractor.
- Do not run the relay wiring for the motion sensor and power supply wiring in parallel. Electromagnetic Interference (EMI) may cause malfunction of the sensor.
- This equipment can be installed with a Ground Fault Circuit Breaker (GFCI), which is a recognized measure for added protection to a properly grounded unit. Install appropriate sized breakers/fuses/ overcurrent protection switches, and wiring in accordance with local, state and NEC codes and requirements. The equipment installer is responsible for understanding and abiding by applicable codes and requirements.

3. Applicable Model

This decorative panel is compatible with any of the following indoor unit models.

Decorative Panel	Indoor Unit Model
P-AP90DNA	(H,Y,C) IC2018B21S, (H,Y,C) IC2024B21S

4. Transporting and Handling

- Avoid unpackaging the decorative panel until it has arrived at the installation site.
- Install the decorative panel as soon as possible after unpacking.
- When the decorative panel is placed on the floor after unpacking, position it with the rear surface facing down (the surface that faces the unit when installed), or upon soft packing insulation material. Any superficial damage to this product can compromise its moisture-sealing qualities. Be careful not to come into contact with, or place with the louver side down, as the louvers are fragile and are easily damaged by contact with any horizontal or floor surfaces.
- Do not attempt to move the louver manually. The louver auto-swing mechanism can be damaged.

5. Before Installation

Check to ensure that the following accessories and fasteners are packed with the decorative panel.

Name	Qty.	Purpose
Long Screw (M6 Cross Screw)	4	For Securing Decorative Panel
Logo Label HITACHI	1	Logo Label for HITACHI Brand
Logo Label YORK	1	Logo Label for YORK Brand

If any of these accessories is not included in the packing, please contact your distributor or contractor.

6. Installation

⚠CAUTION

Exercise caution when performing installation work from an elevated position using a stepladder. The hazard for serious injury exists.

NOTICE

Do not attempt to move any louver manually. The louver auto-swing mechanism can be damaged. Similarly, do not apply excessive force to the air discharge vent as it will also be damaged.

1. Refer to the indoor unit installation manual to determine the proper installation height of the product.
2. Do not touch the louver during installation work.
3. Verify that the distance between the under surface of the indoor unit and the under surface of the false ceiling is 1-7/8 inches (+ 3/16 inch) or 47mm (+ 5mm) as shown below.

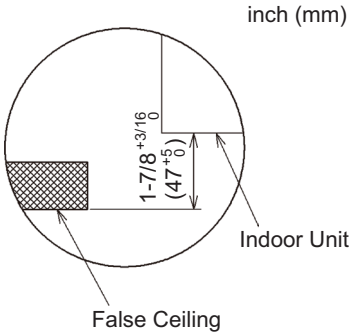

4. Remove the air inlet flat grille from the decorative panel. Lift up one side of the air inlet flat grille (①) then slide to arrow direction as figure (②). Lift up the other side of the air inlet flat grille to remove from the hinge (③). Open the air inlet flat grill approximately 90° from the decorative panel surface and remove the loop clutch of the chain from the decorative panel (④). Then remove the air inlet flat grille from the other side of the hinge (⑤⑥).

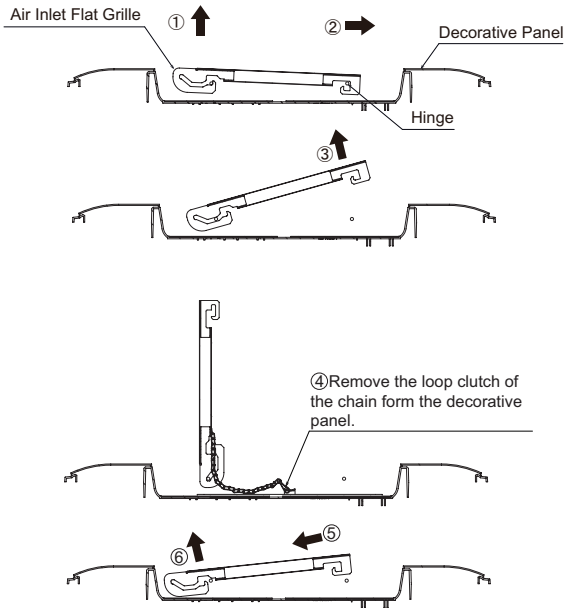

5. Remove the corner pocket covers.
   The corner pocket covers can be removed pulling Ⓐ part toward the arrow direction as in the figure.

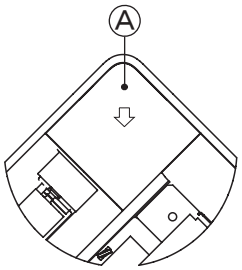

6. Remove the air filter from the decorative panel by turning the six knobs for air filter 90 degrees.

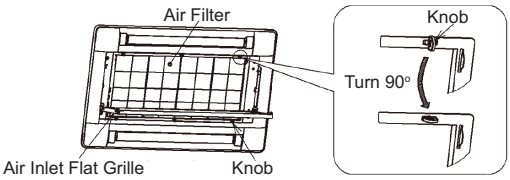

7. Adjust the name label mark of the electrical box and air inlet flat panel. Then temporarily hang the decorative panel from the indoor unit by hooking the hinges of the decorative panel into the hooks of the indoor unit.

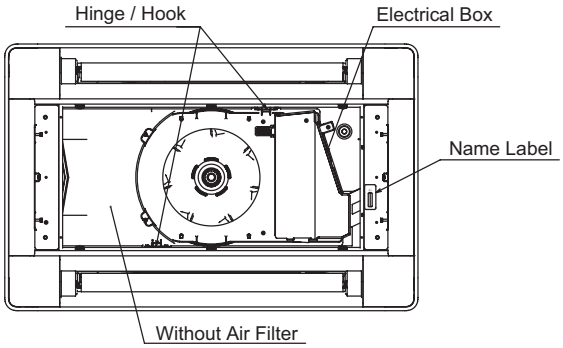

8. Push up the decorative panel toward the indoor unit side, then fix the decorative panel to the mounting seat of the unit by using long screws (M6, 4pcs). Fix the screws according to the figure below. Tightening the screws firmly to prevent the air leakage of eliminate the gap between the panel and ceiling may cause deformation of the panel inner face but it is not abnormal.

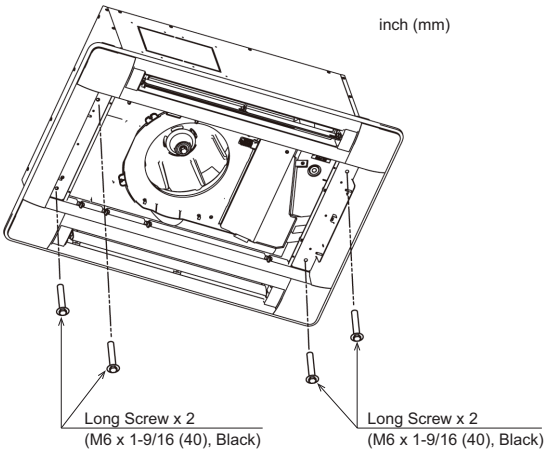

9. When tightening the long screws to prevent air leakage and to prevent a gap between the false ceiling surface and the indoor unit, the inner circumference of the decorative panel (the position to attach the air inlet flat grille) may be slightly deformed. However, it is not an abnormality.

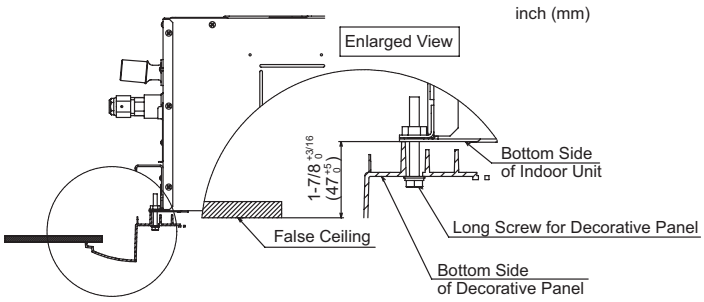

NOTE:
The standard installation dimension between the indoor unit under the surface and the false ceiling surface is 1-7/8 inches (+ 3/16 inch) or 47mm (+ 5mm). If the position and the alignment of the indoor unit are not correct, the decorative panel can not be installed correctly.

NOTICE

- Firmly tighten the long screws. Failure to tighten and seal sufficiently will allow moisture and condensation to spread, and cause damage to the unit.

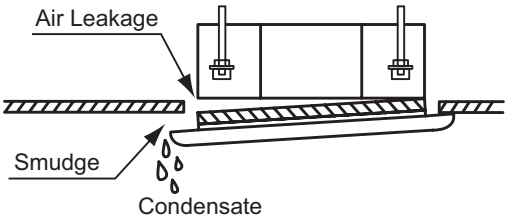

- If a gap still remains after securing all screws, readjust the height of the unit.

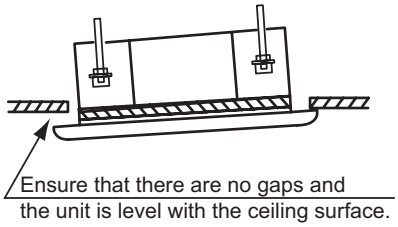

- The indoor unit can be leveled by accessing the adjustment at the corners of the panel.

  NOTE:
  Over-adjustment for height will cause moisture leakage from the drain pan.

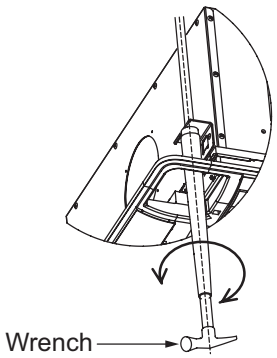

⚠ WARNING

- **If using a forming agent after installing the decorative panel, avoid touching the forming agent to the decorative panel. If this happens, completely wipe off the forming agent from the panel.**
  If the forming agent touches the decorative panel, it may cause damage to the decorative panel.

10. Attachment of the Corner Pocket Cover

Attach all four corner pocket covers after the decorative panel is fastened into place.

a. Install the corner tether onto the hook as shown below.
b. Insert the fixing hooks (two) at Ⓑ to the decorative panel and insert the fixing hook (one) at Ⓒ to the decorative panel.

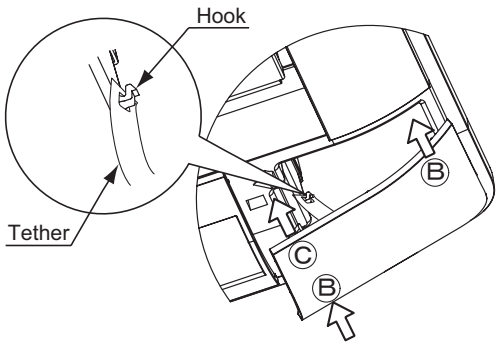

⚠ CAUTION

Securely attach the tether to the hook. Failure to secure the corner cover can cause it to drop to the floor with possible injury to those nearby.

7. Electrical Wiring

⚠ WARNING

- **All electrical installation work must be performed by certified personnel and all work must be complete and conform to local and NEC (National Electrical Code) standards. Failure to uphold these standards can result in damage, fire, electrical shock, and serious or fatal injury.**
- **Cables at the terminals should be tightened only to recommended torque specifications. Excessive force can fracture the terminal connections and can result in a short circuit and fire at the terminal connection.**

1. The following connectors are used in the decorative panel. Remove the tape securing the wiring connectors on the decorative panel and remove as shown below. Reconnect them with the wiring connectors to CN17 in the electrical box as in the following figure.

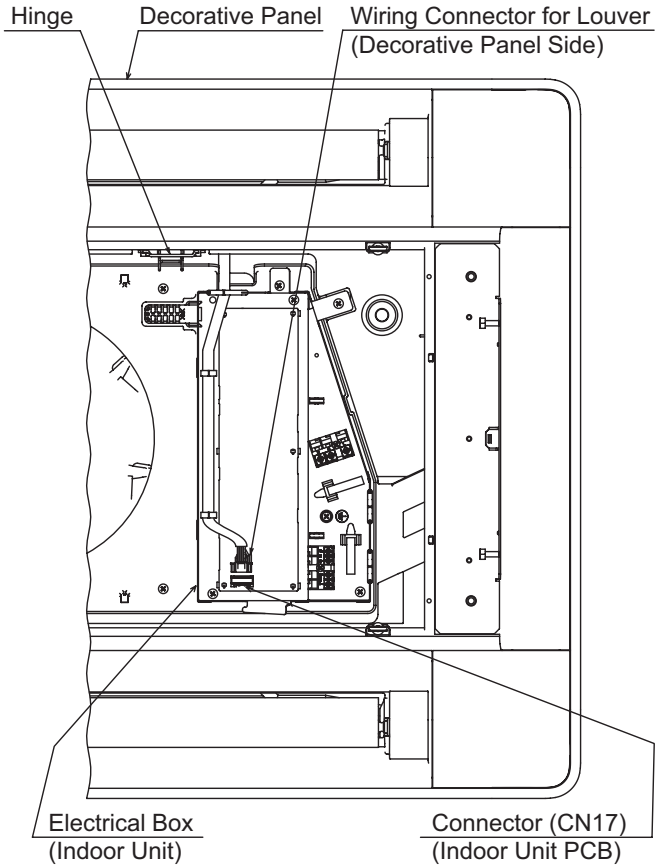

NOTICE

Turn OFF the power supply before performing the electrical work. If the connectors are connected without turning OFF the power supply, the auto-swing louver can not activate.

2. After wiring connections are completed at the decorative panel, secure the air inlet flat grille in the reverse order that it was removed (See Section 3: “Installation”).

8. Test Run

1. After completing installation of the decorative panel, a test run should be performed according to the "Installation and Maintenance Manual" for the indoor unit.
2. Perform the louver operation during the test run. Do not move the louver manually or damage will occur.
   a. Press "⏻ On/Off", and the unit operation is started. Select airflow direction by pressing the "◁" or "▷" buttons on the controller.
   b. The louver angle is changed by pressing "△" or "▽" buttons on the controller.

LCD Indication

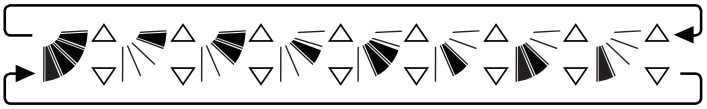

Auto-swing operation is started by selecting "" (auto-swing). When Auto Swing is selected, the LCD indicator displays an animated swing operation.

NOTICE

- Adequate and optimal airflow is dependent on application and installation practices which include positioning of office equipment, room structure, and office cubicle or furniture layout. Adjust airflow for maximum comfort.
- The position of the louvers may not coincide with the louver position indicator on the LCD during auto swing operation. When adjusting the louver angle, set it according to the louver position on the LCD.
- Even if the "△" or "▽" are pressed to stop the auto swing function, the louver does not immediately stop.
- If the cooling operation is performed with greater than 80% relative humidity, condensation may form on the decorative panel or louver surfaces.

⚠ CAUTION

Do not move the louver by hand. If moved, the louver mechanism will be damaged.
In addition, do not apply an excessive force to the air outlet part in order to prevent breakage.

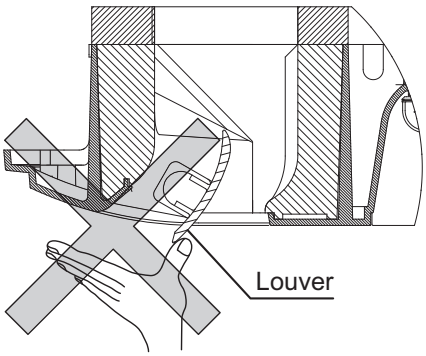

Do not clamp any wiring between the unit and panel when attaching the panel. If clamped, the panel would be damaged.

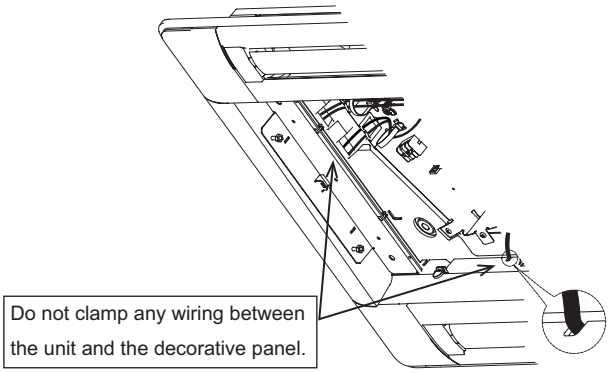

After installation is complete, forward this manual, as well as the warranty information to the building owner or tenant.

© 2015 Johnson Controls, Inc.

P5415763-rev.1

Code No. LIT-12012215
Revised January 2018