HITACHI

EN INSTALLATION AND OPERATION MANUAL
ES MANUAL DE INSTALACIÓN Y FUNCIONAMIENTO
DE INSTALLATIONS- UND BETRIEBSHANDBUCH
FR MANUEL D'INSTALLATION ET DE FONCTIONNEMENT
IT MANUALE D'INSTALLAZIONE E D'USO
PT MANUAL DE INSTALAÇÃO E DE FUNCIONAMENTO
DA INSTALLATIONS- OG BETJENINGSVEJLEDNING
NL INSTALLATIE- EN BEDIENINGSHANDLEIDING
SV INSTALLATION- OCH DRIFTHANDBOK
EL ΕΓΧΕΙΡΙΔΙΟ ΕΓΚΑΤΑΣΤΑΣΗΣ ΚΑΙ ΛΕΙΤΟΥΡΓΙΑΣ

NETWORK / MODBUS GATEWAYS
HC-A(8/16/64)MB / HC-A64NET

English

Specifications in this manual are subject to change without notice in order that Hitachi may bring the latest innovations to their customers.
Whilst every effort is made to ensure that all specifications are correct, printing errors are beyond Hitachi's control; Hitachi cannot be held responsible for these errors.

Español

Las especificaciones de este manual están sujetas a cambios sin previo aviso a fin de que Hitachi pueda ofrecer las últimas innovaciones a sus clientes.
A pesar de que se hacen todos los esfuerzos posibles para asegurarse de que las especificaciones sean correctas, los errores de impresión están fuera del control de Hitachi, a quien no se hará responsable de ellos.

Deutsch

Bei den technischen Angaben in diesem Handbuch sind Änderungen vorbehalten, damit Hitachi seinen Kunden die jeweils neuesten Innovationen präsentieren kann.
Sämtliche Anstrengungen wurden unternommen, um sicherzustellen, dass alle technischen Informationen ohne Fehler veröffentlicht worden sind. Für Druckfehler kann Hitachi jedoch keine Verantwortung übernehmen, da sie außerhalb ihrer Kontrolle liegen.

Français

Les caractéristiques publiées dans ce manuel peuvent être modifiées sans préavis, Hitachi souhaitant pouvoir toujours offrir à ses clients les dernières innovations.
Bien que tous les efforts sont faits pour assurer l'exactitude des caractéristiques, les erreurs d'impression sont hors du contrôle de Hitachi qui ne pourrait en être tenu responsable.

Italiano

Le specifiche di questo manuale sono soggette a modifica senza preavviso affinché Hitachi possa offrire ai propri clienti le ultime novità.
Sebbene sia stata posta la massima cura nel garantire la correttezza dei dati, Hitachi non è responsabile per eventuali errori di stampa che esulano dal proprio controllo.

Português

As especificações apresentadas neste manual estão sujeitas a alterações sem aviso prévio, de modo a que a Hitachi possa oferecer aos seus clientes, da forma mais expedita possível, as inovações mais recentes.
Apesar de serem feitos todos os esforços para assegurar que todas as especificações apresentadas são correctas, quaisquer erros de impressão estão fora do controlo da Hitachi, que não pode ser responsabilizada por estes erros eventuais.

Dansk

Specifikationerne i denne vejledning kan ændres uden varsel, for at Hitachi kan bringe de nyeste innovationer ud til kunderne.
På trods af alle anstrengelser for at sikre at alle specifikationerne er korrekte, har Hitachi ikke kontrol over trykfejl, og Hitachi kan ikke holdes ansvarlig herfor.

Nederlands

De specificaties in deze handleiding kunnen worden gewijzigd zonder verdere kennisgeving zodat Hitachi zijn klanten kan voorzien van de nieuwste innovaties.
Iedere poging wordt ondernomen om te zorgen dat alle specificaties juist zijn. Voorkomende drukfouten kunnen echter niet door Hitachi worden gecontroleerd, waardoor Hitachi niet aansprakelijk kan worden gesteld voor deze fouten.

Svenska

Specifikationerna i den här handboken kan ändras utan föregående meddelande för att Hitachi ska kunna leverera de senaste innovationerna till kunderna.
Vi på Hitachi gör allt vi kan för att se till att alla specifikationer stämmer, men vi har ingen kontroll över tryckfel och kan därför inte hållas ansvariga för den typen av fel.

Ελλhnika

Οι προδιαγραφές του εγχειριδίου μπορούν να αλλάξουν χωρίς προειδοποίηση, προκειμένου η Hitachi να παρέχει τις τελευταίες καινοτομίες στους πελάτες της.
Αν και έχει γίνει κάθε προσπάθεια προκειμένου να εξασφαλιστεί ότι οι προδιαγραφές είναι σωστές, η Hitachi δεν μπορεί να ελέγξει τα τυπογραφικά λάθη και, ως εκ τούτου, δεν φέρει καμία ευθύνη για αυτά τα λάθη.

⚠ CAUTION

This product shall not be mixed with general house waste at the end of its life and it shall be retired according to the appropriated local or national regulations in a environmentally correct way.
Due to the refrigerant, oil and other components contained in Air Conditioner, its dismantling must be done by a professional installer according to the applicable regulations. Contact to the corresponding authorities for more information.

⚠ PRECAUCIÓN

Éste producto no se debe eliminar con la basura doméstica al final de su vida útil y se debe desechar de manera respetuosa con el medio ambiente de acuerdo con los reglamentos locales o nacionales aplicables.
Debido al refrigerante, el aceite y otros componentes contenidos en el sistema de aire acondicionado, su desmontaje debe realizarlo un instalador profesional de acuerdo con la normativa aplicable. Para obtener más información, póngase en contacto con las autoridades competentes.

⚠ VORSICHT

Dass Ihr Produkt am Ende seiner Betriebsdauer nicht in den allgemeinen Hausmüll geworfen werden darf, sondern entsprechend den geltenden örtlichen und nationalen Bestimmungen auf umweltfreundliche Weise entsorgt werden muss.
Aufgrund des Kältemittels, des Öls und anderer in der Klimaanlage enthaltener Komponenten muss die Demontage von einem Fachmann entsprechend den geltenden Vorschriften durchgeführt werden. Für weitere Informationen setzen Sie sich bitte mit den entsprechenden Behörden in Verbindung.

⚠ ADVERTISSEMENT

Ne doit pas être mélangé aux ordures ménagères ordinaires à la fin de sa vie utile et qu'il doit être éliminé conformément à la réglementation locale ou nationale, dans le plus strict respect de l'environnement.
En raison du frigorigène, de l'huile et des autres composants que le climatiseur contient, son démontage doit être réalisé par un installateur professionnel conformément aux réglementations en vigueur.

⚠ AVVERTENZE

Indicazioni per il corretto smaltimento del prodotto ai sensi della Direttiva Europea 2011/65/EU e D.Lgs 4 marzo 2014 n.27.
Il simbolo del cassonetto barrato riportato sull' apparecchiatura indica che il prodotto alla fine della propria vita utile deve essere raccolto separatamente dagli altri rifiuti.
L'utente dovrà, pertanto, conferire l'apparecchiatura giunta a fine vita agli idonei centri di raccolta differenziata dei rifiuti elettronici ed elettrotecnici, oppure riconsegnarla al rivenditore al momento dell' acquisto di una nuova apparecchiatura di tipo equivalente.
L'adeguata raccolta differenziata delle apparecchiature dismesse, per il loro avvio al riciclaggio, al trattamento ed allo smaltimento ambientalmente compatibile, contribuisce ad evitare possibili effetti negativi sull' ambiente e sulla salute e favorisce il riciclo dei materiali di cui è composta l' apparecchiatura. Non tentate di smontare il sistema o l'unità da soli poichè ciò potrebbe causare effetti dannosi sulla vostra salute o sull' ambiente. Vogliate contattare l' installatore, il rivenditore, o le autorità locali per ulteriori informazioni.
Lo smaltimento abusivo del prodotto da parte dell'utente può comportare l'applicazione delle sanzioni amministrative di cui all'articolo 50 e seguenti del D.Lgs. n. 22/1997.

⚠ CUIDADO

O seu produto não deve ser misturado com os desperdícios domésticos de carácter geral no final da sua duração e que deve ser eliminado de acordo com os regulamentos locais ou nacionais adequados de uma forma correcta para o meio ambiente.
Devido ao refrigerante, ao óleo e a outros componentes contidos no Ar condicionado, a desmontagem deve ser realizada por um instalador profissional de acordo com os regulamentos aplicáveis. Contacte as autoridades correspondentes para obter mais informações.

⚠ ADVASEL!

At produktet ikke må smides ud sammen med almindeligt husholdningsaffald, men skal bortskaffes i overensstemmelse med de gældende lokale eller nationale regler på en miljømæssig korrekt måde.
Da klimaanlægget indeholder kølemiddel, olie samt andre komponenter, skal afmontering foretages af en fagmand i overensstemmelse med de gældende bestemmelser.
Kontakt de pågældende myndigheder for at få yderligere oplysninger.

⚠ VOORZICHTIG

Dit houdt in dat uw product niet wordt gemengd met gewoon huisvuil wanneer u het weg doet en dat het wordt gescheiden op een milieuvriendelijke manier volgens de geldige plaatselijke en landelijke reguleringen.
Vanwege het koelmiddel, de olie en andere onderdelen in de airconditioner moet het apparaat volgens de geldige regulering door een professionele installateur uit elkaar gehaald worden. Neem contact op met de betreffende overheidsdienst voor meer informatie.

⚠ FÖRSIKTIGHET

Det innebär att produkten inte ska slängas tillsammans med vanligt hushållsavfall utan kasseras på ett miljövänligt sätt i enlighet med gällande lokal eller nationell lagstiftning.
Luftkonditioneringsaggregatet innehåller kylmedium, olja och andra komponenter, vilket gör att det måste demonteras av en fackman i enlighet med tillämpliga regelverk.
Ta kontakt med ansvarig myndighet om du vill ha mer information.

⚠ ΠΡΟΣΟΧΗ

Σημαίνει ότι το προϊόν δεν θα πρέπει να αναμιχθεί με τα διάφορα οικιακά απορρίμματα στο τέλος του κύκλου ζωής του και θα πρέπει να αποσυρθεί σύμφωνα με τους κατάλληλους τοπικούς ή εθνικούς κανονισμούς και με τρόπο φιλικό προς το περιβάλλον.
Λόγω του ψυκτικού, του λαδιού και άλλων στοιχείων που περιέχονται στο κλιματιστικό, η αποσυναρμολόγησή του πρέπει να γίνει από επαγγελματία τεχνικό και σύμφωνα με τους ισχύοντες κανονισμούς.
Για περισσότερες λεπτομέρειες, επικοινωνήστε με τις αντίστοιχες αρχές.

DANGER – Hazards or unsafe practices which COULD result in severe personal injuries or death.

PELIGRO – Riesgos o prácticas poco seguras que PODRÍAN producir lesiones personales e incluso la muerte.

GEFAHR – Gefährliche oder unsichere Anwendung, die zu schweren Körperverletzungen oder zum Tod führen kann.

DANGER – Utilisation dangereuse ou sans garantie de sécurité qui PEUT provoquer de sévères blessures personnelles ou la mort.

PERICOLO – Pericoli o azioni pericolose che POTREBBERO avere come esito lesioni fisiche gravi o il decesso.

PERIGO – Riesgos o prácticas poco seguras que PUEDEN producir lesiones personales e incluso la muerte

FARE – Farer eller farlig brug, som KAN resultere i alvorlig personskade eller dødsfald.

GEVAAR – Gevaren of onveilige praktijken die ernstig persoonlijk letsel of de dood tot gevolg KUNNEN hebben.

FARA – Risker eller osäkra tillvägagångssätt som KAN leda till svåra personskador eller dödsfall.

KINAYNO – Κίνδυνοι ή επικίνδυνες πρακτικές, οι οποίες ΜΠΟΡΕΙ να έχουν ως αποτέλεσμα σοβαρές σωματικές βλάβες ή θάνατο.

CAUTION – Hazards or unsafe practices which COULD result in minor personal injury or product or property damage.

PRECAUCIÓN – Riesgos o prácticas poco seguras que PODRÍAN provocar lesiones personales de menor importancia o daños en el producto u otros bienes.

VORSICHT – Gefährliche oder unsichere Anwendung, die geringfügigen Personen-, Produkt- oder Sachschaden verursachen kann.

ATTENTION – Utilisation dangereuse ou sans garantie de sécurité qui PEUT provoquer des blessures mineures ou des dommages au produit ou aux biens.

AVVERTENZA – Pericoli o azioni pericolose che POTREBBERO avere come esito lesioni fisiche minori o danni al prodotto o ad altri beni.

CUIDADO – Perigos e procedimentos perigosos que PODERÃO PROVOCAR danos pessoais ligeiros ou danos em produtos e bens.

FORSIGTIG – Farer eller farlig brug, som KAN resultere i mindre skade på personer, produkt eller ejendom.

LET OP – Gevaren of onveilige praktijken die licht persoonlijk letsel of beschadiging van het product of eigendommen tot gevolg KUNNEN hebben.

VARNING – Risker eller farliga tillvägagångssätt som KAN leda till mindre personskador eller skador på produkten eller på egendom.

ΠΡΟΣΟΧΗ – Κίνδυνοι ή επικίνδυνες πρακτικές, οι οποίες ΜΠΟΡΕΙ να έχουν ως αποτέλεσμα την πρόκληση ελαφρών σωματικών βλαβών ή καταστροφή περιουσίας.

NOTE – The text following this symbol contains information or instructions that may be of use or that require a more thorough explanation.

NOTA – El texto que sigue a este símbolo contiene información o instrucciones que pueden ser de utilidad o requeridas para ampliar una explicación.

HINWEIS – Der diesem Symbol folgende Text enthält konkrete Informationen und Anleitungen, die nützlich sein können oder eine tiefergehende Erklärung benötigen.

REMARQUE – Les textes précédés de ce symbole contiennent des informations ou des indications qui peuvent être utiles, ou qui méritent une explication plus étendue.

NOTA – I testi preceduti da questo simbolo contengono informazioni o indicazioni che possono risultare utili o che meritano una spiegazione più estesa.

NOTA – Os textos precedidos deste símbolo contêm informações ou indicações que podem ser úteis, ou que merecem uma explicação mais detalhada.

BEMÆRK – Den tekst, der følger efter dette symbol, indeholder oplysninger eller anvisninger, der kan være til nytte, eller som kræver en mere grundig forklaring.

OPMERKING – De teksten waar dit symbool voorstaat bevatten nuttige informatie en aanwijzingen, of informatie en aanwijzingen meer uitleg behoeven.

OBS! – Texten efter denna symbol innehåller information och anvisningar som kan vara användbara eller som kräver en noggrannare förklaring.

ΣΗΜΕΙΩΣΗ – Το κείμενο που ακολουθεί αυτό το σύμβολο περιέχει πληροφορίες ή οδηγίες που μπορεί να φανούν χρήσιμες ή που απαιτούν μια πιο ενδελεχή εξήγηση.

INDEX

1 PRODUCT GUIDE
2 NEW PRODUCT GENERAL DATA
3 INSTALLATION
4 ELECTRICAL WIRING
5 OPERATION
6 NET CONFIGURATION KIT

ÍNDICE

1 GUIA DO PRODUTO
2 DADOS GERAIS DO PRODUTO NOVO
3 INSTALAÇÃO
4 LIGAÇÕES ELÉTRICAS
5 FUNCIONAMENTO
6 JOGO DE CONFIGURAÇÃO DA REDE

ÍNDICE

1 GUÍA DEL PRODUCTO
2 DATOS GENERALES DEL NUEVO PRODUCTO
3 INSTALACIÓN
4 CABLEADO ELÉCTRICO
5 FUNCIONAMIENTO
6 KIT DE CONFIGURACIÓN DE LA RED

INDEKS

1 PRODUKTVEJLEDNING
2 GENERELLE DATA OM DET NYE PRODUKT
3 MONTERING
4 ELEKTRISK LEDNINGSFØRING
5 DRIFT
6 NETKONFIGURATIONSSÆT

INHALT

1 PRODUKTÜBERSICHT
2 ALLGEMEINE DATEN DES NEUEN PRODUKTS
3 INSTALLATION
4 KABELANSCHLUSS
5 BETRIEB
6 NETZKONFIGURATIONSSET

INHOUDSOPGAVE

1 PRODUCTGIDS
2 ALGEMENE GEGEVENS NIEUW PRODUCT
3 INSTALLATIE
4 ELEKTRISCHE BEDRADING
5 BEDRIJF
6 NETCONFIGURATIEKIT

INDEX

1 GUIDE DU PRODUIT
2 CARACTÉRISTIQUES GÉNÉRALES DE NOUVEAU PRODUIT
3 INSTALLATION
4 CÂBLAGE ÉLECTRIQUE
5 FONCTIONNEMENT
6 KIT DE CONFIGURATION RÉSEAU

INDEX

1 PRODUKTGUIDE
2 ALLMÄN DATA FÖR NY PRODUKT
3 INSTALLATION
4 ELEKTRISKA LEDNINGAR
5 DRIFT
6 KIT FÖR NÄTKONFIGURERING

INDICE

1 GUIDA DEI PRODOTTI
2 SPECIFICHE GENERALI DEL NUOVO PRODOTTO
3 INSTALLAZIONE
4 COLLEGAMENTO DELLO SCHEMA ELETTRICO
5 FUNZIONAMENTO
6 KIT CONFIGURAZIONE RETE

ΕΥΡΕΤΗΡΙΟ

1 ΟΔΗΓΟΣ ΠΡΟΪΟΝΤΟΣ
2 ΓΕΝΙΚΑ ΔΕΔΟΜΕΝΑ ΝΕΟΥ ΠΡΟΪΟΝΤΟΣ
3 ΕΓΚΑΤΑΣΤΑΣΗ
4 ΗΛΕΚΤΡΙΚΗ ΚΑΛΩΔΙΩΣΗ
5 ΛΕΙΤΟΥΡΓΙΑ
6 ΚΙΤ ΔΙΑΜΟΡΦΩΣΗΣ ΔΙΚΤΥΟΥ

EN	English	Original version
ES	Español	Versión traducida
DE	Deutsch	Übersetzte Version
FR	Français	Version traduite
IT	Italiano	Versione tradotta
PT	Português	Versão traduzidal
DA	Dansk	Oversat version
NL	Nederlands	Vertaalde versie
SV	Svenska	Översatt version
EL	ΕΛΛΗΝιΚΑ	Μεταφρασμένη έκδοση

1 PRODUCT GUIDE

1.1 CLASSIFICATION OF THE UNITS

Interface Controller Control				
	Dash separation			
		H-LINK II Compatible		
			Maxim Number of Controllable Units (8/16/64)	
				MB: Modbus gateway NET: Gateway for CSNET Manager
HC	-	A	X	X

1.2 MODELS

DESCRIPTION
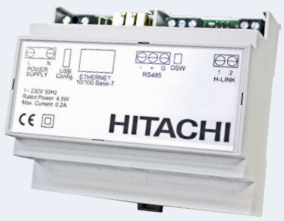
HC-A8MB
HC-A16MB
HC-A64MB
HC-A64NET

1.3 ACCESSORY LIST

DESCRIPTION
Net configuration kit

2 NEW PRODUCT GENERAL DATA

2.3.1 Hardware specifications

Item	Specifications
Power supply	1~ 230 V ±10% 50 Hz
Consumption	4.5W (maximum)
Outer dimensions	Width: 106 mm, Depth: 90 mm, Height: 58 mm
Weight	165 g
Assembling conditions	Indoors (installation inside an enclosure with restricted access by a tool)
Ambient temperature	0~60 ºC
Humidity	20~85% (Without condensation)

2.3.2 Communication

◆ RS485

Item	Specifications
Type	Modbus RTU for HC-A(8/16/64)MB
	Not available for HC-A64NET
Connector	Serial Port RS485 (3 screw terminals)
Communication line	Shielded twisted pair cable, with third wire (for the common), with polarity.
Communication system	Half-duplex, multipoint serial connection
Communication method	Non parity or odd/even parity selection. Data length: 8 bits – 1 stop bit
Baud rate transmission	19200/9600 Baud
Length	Max. 1200 m according EIA-485

◆ Ethernet

Item	Specifications
Type	Modbus TCP for HC-A(8/16/64)MB
	TCP/IP communication for HC-A64NET
Connector	Ethernet (RJ45)
Communication line	Two twisted pair cable CAT5 or better (T-568A/T-568B)
Communication system	Full-duplex
Length	Max. 100 m according IEEE 802.3

◆ H-LINK

Item	Specifications
Communication with	HC-A(16/64)MB: SET FREE, UTOPIA, CENTRIFUGAL and HEATING systems HC-A8MB and HC-A64NET: SET FREE, UTOPIA and CENTRIFUGAL systems
Communication line	Twisted pair shielded cable, non-polarity
Communication system	Half-duplex
Communication method	Asynchronous
Speed of transmission	9600 Bauds
Length of wiring	1000 m maximum (total length of H-LINK I/O bus)
Maximum number of gateways	1 Gateway (HC-A(8/16/64)MB) / H-LINK SYSTEM
Maximum number of IU	HC-A64MB → up to 64 * Indoor Units
	HC-A16MB → up to 16 * Indoor Units
	HC-A8MB → up to 8 * Indoor Units
	HC-A64NET → up to 64* Indoor Units

3 INSTALLATION

3.1 SAFETY SUMMARY

DANGER

- ***Read carefully this manual before performing the installation work.***
- ***Do not install this device in places accessible to the general public. Install it in electrical enclosures, which are only accessible by the usage of a tool and also provide protection to eventual electromagnetic disturbances.***
- ***Do not connect power supply before the device installation is correctly done. Always disconnect power supply from the device before any maintenance or servicing action.***

CAUTION

- *This appliance must be used only by adult and capable people, having received the technical information or instructions to handle properly and safely this appliance.*
- *This is a Class A product. In a domestic environment this product may cause radio interferences in which case the user may be required to take adequate measures.*
- *Children should be supervised to ensure that they do not play with the appliance.*
- *Check to ensure that the field supplied electrical components (mains power switches, circuit breakers, wires, connectors and wire terminals) have been properly selected according to the electrical data indicated on this document and they comply with national and local codes. If it is necessary, contact with your local authority in regards to standards, rules, regulations, etc.*
- *Do not install Network / Modbus gateways in places:*
  - *where any vapor, oil or other dispersed liquids could affect the device.*
  - *where accumulation, generation or leaks of inflammable gases has been detected.*
  - *near to any heat sources or electromagnetic noise sources.*
  - *that they are near to the sea, in saline, acid or alkaline surroundings.*

3.2 FACTORY-SUPPLIED COMPONENTS

Gateway device		Instruction manual		USB Pen Drive Memory	
1x	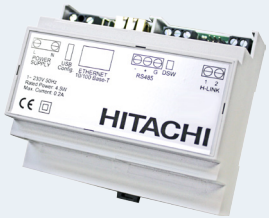	1x		1x	

3.3 DIMENSIONAL DATA

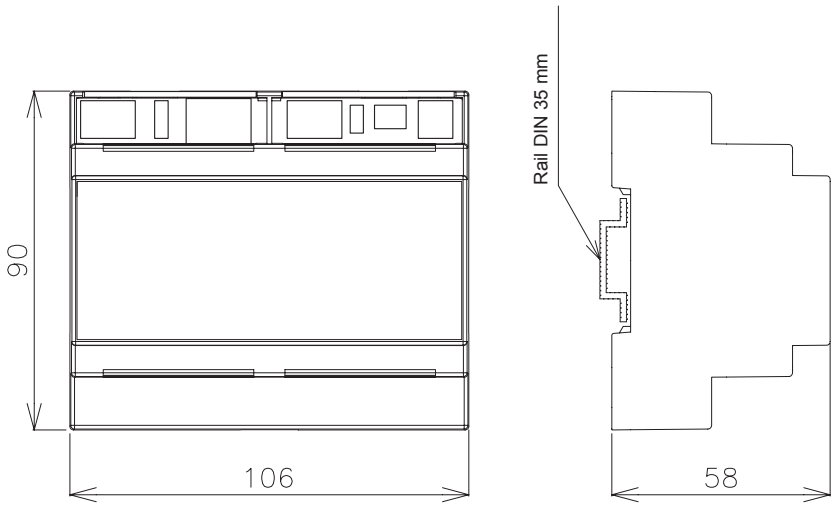

3.4 DESCRIPTION OF THE PARTS

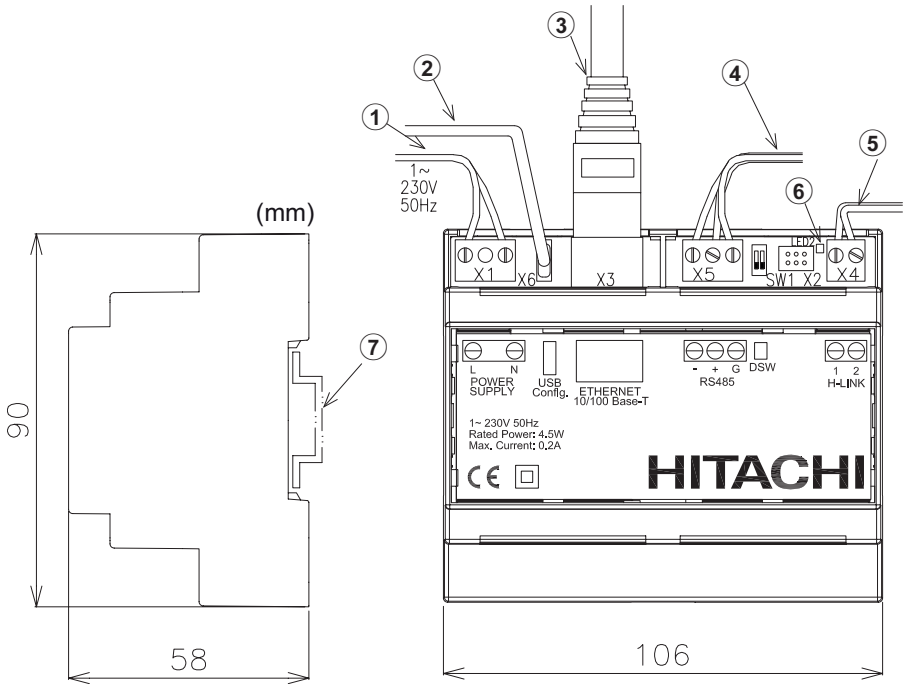

No.	Description
1	External power supply
2	USB cable at configuration time only
3	RJ45 Ethernet HC-A(8/16/64)MB: Modbus TCP HC-A64NET : TCP/IP
4	RS485 Modbus RTU for HC-A(8/16/64)MB Not available for HC-A64NET
5	H-LINK Communication bus with Hitachi units
6	Operation led indicator
7	Rail DIN 35 mm for assembly inside the electrical box

3.5 INSTALLATION SPACE

Keep free the grey area for the correct operation of the device.

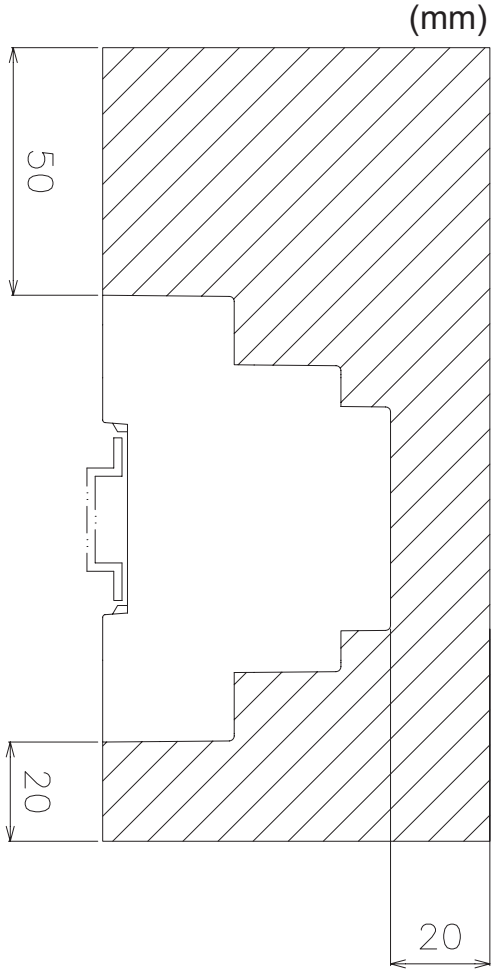

3.6 INSTALLATION PROCEDURE

DANGER

- ***Do not install this device in places accessible to the general public. Install it in enclosures or other places which are accessible only by the usage of a tool.***
- ***Do not connect power supply before the device installation is correctly done. Always disconnect power supply from the device before any maintenance or servicing action***

CAUTION

- *Check to ensure that the field supplied electrical components (mains power switches, circuit breakers, wires, connectors and wire terminals) have been properly selected according to the electrical data indicated on this document and they comply with national and local codes*
- *Any unit that is not connected or is not under power when turning on Network / Modbus gateways, will not be recognized and will have to be configured later.*
  - *Before power supply and turning on the Network / Modbus gateways, you must ensure that:*
    - *1. All circuits to be connected are correctly applied.*
    - *2. All H-Link connections have been set up.*
    - *3. Modbus connection has been properly done.*
- *The signals' cables should be as short as possible. Keep a distance of more than 150 mm from other power cables. Do not wire them together (although they may intersect). If they must necessarily be installed together, take the following measures to avoid noise disturbances:*
  - *For communications, use shielded wire which is earthed at one side.*

3.7 NETWORK CONFIGURATION

It is supplied a computer software tool, Net configuration Tool, inside the USB stick memory for an easy and friendly configuration.

3.7.1 Computer requirements.

It is required to use a personal computer with Microsoft Windows 7 or higher, a free USB port and Java.

3.7.2 Parameters under configuration:

- *Parity: Odd/Even/Disabled*
- *Communication speed: 9600/19200 Bps*
- *Modbus address*
- *Modbus TCP IP*

3.7.3 Configuration procedure

◆ Configuration through USB port

This method is required when the device IP is unknown.

1. Connect the network device to a computer by a USB cable (field supplied or available with the Net Configuration Kit)
2. Select the communication port of the computer.
3. Press the button at screen

◆ Configuration through Ethernet port

1 Connect the Network device to a computer by a ethernet cable (field supplied or available with either the Net Configuration Kit or the CSNET MANAGER)

2 Input the following parameters:

- IP Address: 192.168.0.4
- Port: Modbus Gateway/ HC-A64NET

3 Press the button at screen

◆ Configuration of device and communication

HC-A(8/16/64)MB

HC-A64NET

"Device information"

Check that the network device is correctly displayed at the "Device information" table. Press refresh button if necessary.

“Network information”

When the network device is integrated to the LAN / Modbus net by Ethernet, configure the following parameters:

- IP Address: Allow to modify the IP of the Network device port (“192.168.0.4” by default).
- Mask: Ask to your IT technician for the proper value (“255.255.255.0” by default).
- Gateway: LAN gateway address (“192.168.0.1” by default).

“Serial Information”

When the network device is integrated to the Modbus net by serial port RS485, configure the following parameters:

- RS485: 9600 / 19200 Bps (“19200” Bps by default)
- RS485: None / Odd / Even parity (“Even” by default)
- Modbus Id: 1~128 (“1” by default)
- Polarization: Communication polarization (“Disabled” by default)

NOTE

This part is not available for the HC-A64NET

“Units Id Configuration”

- Automatic address can be done by pushing
- Manual address configuration can be done by the assignation of each Id to a specific H-LINK addresss
  - *Outdoor unit address (Ou) and Indoor unit address (Iu)*

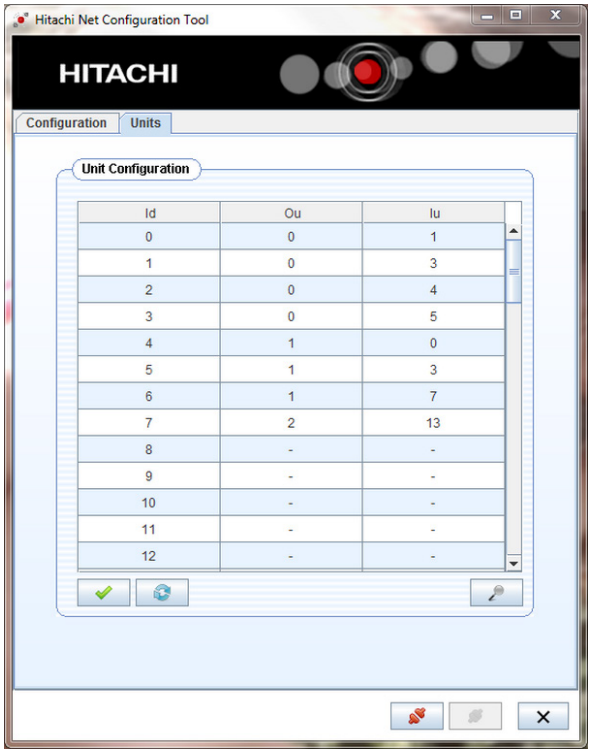

Id	Ou	Iu
0	0	1
1	0	3
2	0	4
3	0	5
4	1	0
5	1	3
6	1	7
7	2	13
8	-	-
9	-	-
10	-	-
11	-	-
12	-	-

- Confirm the configuration by pressing
- Refresh button shall be pressed when modifiy the units conneced to the net

NOTE

This part is not available for the HC-A64NET

4 ELECTRICAL WIRING

Name	Connection	Cable specification
X1	Power supply (1)	Use 0.75 mm2 wires which are not lighter than the polychloroprene sheathed flexible cord (code designation 60245 IEC 57)
X3	Ethernet (1)	Category 5 or higher LAN cables PC connection: Use a crossed cable (1 cable set available in Net configuration Kit) for direct connection. LAN connection: Use a direct cable (field-supplied) for connection to a commercial distributor (Hub).
X4	H-LINK (1)	Twisted pair shielded cable 0.75 mm². Shield must be grounded in one side only.
X5	RS485 (1)	3 cores cable harness 0.75 mm² grounded in one side only. Use different colour for each cable.
X6	USB (1)	USB Mini-B plug cable (1 cable set available in Net configuration Kit)

NOTE

(1) These cables must be field supplied.

4.1 DSW CONFIGURATION

Name	Function	Factory setting	Description
SW1	Configuration		SW1-1: Modbus end resistance (*). SW1-2: Not used (keep always “ON”)

NOTE

(*)No applicable to HC-A64NET.

5 OPERATION

5.1 COMPATIBILITY

These devices are not compatible with any of the following Hitachi controllers:

- *Centralised remote controls*
- *Building air conditioning controls(*)*
- *Other Hitachi BMS Gateways (LONWORKS, BACNET, KNX, FIDELIO)*
- *Other Hitachi MODBUS Gateways*
- *Other units of the same model*

NOTE

(*)HC-A64NET is compatible with CSNET Manager.

5.2 INDOOR UNITS

5.2.1 Available data for HC-A(8/16/64)MB

Offset (1)	Description	Values	Read/Write
0	Exist	0: No exist 1: Exist	Read
1	System address	0~63	Read
2	Unit address		
3	On/Off setting order	0: Stop 1: Run	Read/Write
4	Mode setting order	0: Cool 1: Dry 2: Fan 3: Heat 4: Auto	Read/Write
5	Fan setting order	0: Low 1: Medium 2: High 3: High2 4: Auto	Read/Write
6	Setting temperature	ºC (set according to the unit working range)	Read/Write
7	Louver setting	0 ~ 7 (7 is Auto)	Read/Write
8	Central setting (3)	Bit 0: On/Off (always can be stopped) Bit 1: Mode Bit 2: Setting Temp Bit 3: Fan Bit 4: Louver	Read/Write
9	On/Off status	0: Off 1: On	Read
10	Mode status	0: Cool 1: Dry 2: Fan 3: Heat 4: Auto	Read
11	Fan status	0: Low 1: Medium 2: High 3: High2 4: Auto	Read
12	Setting temperature status	ºC (set according to the unit working range)	Read
13	Louver status	0 ~ 7 (7 is Auto)	Read
14	(Not used)	(Not used)	(Not used)
15	Inlet temperature reading (2)	-63ºC ~ 63ºC	Read
16	Outlet temperature reading (2)	-63ºC ~ 63ºC	Read
17	Gas pipe temperature reading (2)	-63ºC ~ 63ºC	Read
18	Liquid pipe temperature reading (2)	-63ºC ~ 63ºC	Read
19	Alarm code	Alarm unit from 7-segment	Read
20	Compressor stop cause	(Read unit service manual)	Read
21	Indoor unit expansion valve opening	0~100	Read

Offset (1)	Description	Values	Read/Write
22	Unit operation condition	0: OFF 1: Thermo OFF 2: Thermo ON 3: Alarm	Read
23	(Not used)	(Not used)	(Not used)
24	Ambient temperature (2)	-63ºC ~ 63ºC	Read
25	Remote control switch temperature (only when available in the unit) (2)	-63ºC ~ 63ºC	Read
26	Remote control switch configuration	b0: 0 Master/1Slave b1: 0 wih RCS/1 Without RCS	Read/Write
27	Remote control switch group	0: No group 1~255	Read/Write
28~30	(Not used)	(Not used)	(Not used)
31	Remote sensor temperature (2)	-63ºC ~ 63ºC	Read

NOTE

- *(1) Register address is calculated as: "N + (Address * 32) + Offset" where:*
- *N: Data table position is 2000, position 20000 is also available to maintain compatibility with old Modbus gateway.*
- *Address: Indoor unit address as configured by configuration software.*
- *(2) These numbers refer to signed 16-bit value using 2-complement format for negative values*
- *(3) Bit 0 (ON/OFF) and Bit 4 (Louver) selectable only when all centrals are actived.*
- *In order to full lock setting from RCS (Central shown in RCS) set this register to 31.*

5.2.2 Available Data for HC-A(16/64)MB

Offset	Description	Values	Read/Write	Availability		
				VRF	RAC	ATW
0	Exist	0: No exist	Read	O	O	
		1: Exist				
1	System address	H-LINK 1: 0~15	Read	O	O	
2	Unit address	H-LINK 2: 0~63		O	O	
3	Type	0: Indoor Unit	Read	O	O	
4	On/Off setting order	0: Stop	Read/Write	O	O	
		1: Run				
5	Mode setting order	0: Cool	Read/Write	O	O	
		1: Dry				
		2: Fan				
		3: Heat				
		4: Auto				
6	Fan setting order	0: Low	Read/Write	O	O	
		1: Medium				
		2: High				
		3: High2				
		4: Auto				
7	Setting temperature	ºC (set according to the unit working range)	Read/Write	O	O	
8	Temperature setting with 0.5°C intervals	ºC x 10 (19.5ºC read as 195)	Read/Write	O		
9	Heating temperature setting for AUTO Cool/Heat	ºC	Read/Write	O		
10	Heating Temperature setting for AUTO Cool/heat with 0.5°C intervals	ºC x 10 (19.5ºC read as 195)	Read/Write	O		
11	Cooling Temperature setting for AUTO Cool/heat	ºC	Read/Write	O		
12	Cooling Temperature setting for AUTO Cool/heat with 0.5°C intervals	ºC x 10 (19.5ºC read as 195)	Read/Write	O		
13	Louver setting	0 ~ 7 (7 is Auto)	Read/Write	O		
14	Central setting (2)	Bit 0: On/Off (always can be stopped)	Read/Write	O	O	
		Bit 1: Mode				
		Bit 2: Setting Temp				
		Bit 3: Fan				
		Bit4: Louver				
15	On/Off status	0: Off	Read	O	O	
		1: On				
16	Mode status	0: Cool	Read	O	O	
		1: Dry				
		2: Fan				
		3: Heat				
		4: Auto				
17	Fan status	0: Low	Read	O	O	
		1: Medium				
		2: High				
		3: High2				
		4: Auto				
18	Setting temperature status	ºC (set according to the unit working range)	Read	O	O	

Offset	Description	Values	Read/Write	Availability		
				VRF	RAC	ATW
19	Temperature setting with 0.5°C intervals status	ºC x10 (19.5ºC read as 195)	Read	O		
20	Heating temperature setting for AUTO Cool/Heat status	ºC	Read	O		
21	Heating Temperature setting for AUTO Cool/heat with 0.5°C intervals status	ºC x 10 (19.5ºC read as 195)	Read	O		
22	Cooling Temperature setting for AUTO Cool/heat status	ºC	Read	O		
23	Cooling Temperature setting for AUTO Cool/heat with 0.5°C intervals status	ºC x 10 (19.5ºC read as 195)	Read	O		
24	Louver status	0 ~ 7 (7 is Auto)	Read	O		
25	Air inlet temperature reading	-63ºC ~ 63ºC	Read	O		
26	Air outlet temperature reading	-63ºC ~ 63ºC	Read	O		
27	Gas pipe temperature reading	-63ºC ~ 63ºC	Read	O		
28	Liquid pipe temperature reading	-63ºC ~ 63ºC	Read	O		
29	Alarm code	Alarm unit from 7-segment	Read	O	O(1)	
30	Compressor stop cause	(Read unit service manual)	Read	O		
31	Indoor unit expansion valve opening	0~100	Read	O		
32	Unit operation condition	0: OFF 1: Thermo OFF 2: Thermo ON 3: Alarm	Read	O	O	
33	Remote temperature sensor (THM4) value	-63ºC ~ 63ºC	Read	O		
34	Remote control switch temperature (only when available in the unit)	-63ºC ~ 63ºC	Read	O	O	
35	Remote control switch configuration	b0: 0 Master/1Slave b1: 0 wih RCS/1 Without RCS	Read/Write	O		
36	Remote control switch group	0: No group 1~255	Read/Write	O		
37	CN3 Configuration status	b0: Input 1 open/close b1: Input 2 open/close b2: Enabled/Disabled (Indicates if the unit has CN3 enabled with any function)	Read	O		
38~49	Reserved					
50	Control Unit Run/Stop	0: Stop 1: Run	Read/Write			O
51	Control Unit Mode	0: Cool 1: Heat	Read/Write			O
52	Control Circuit 1 Run/Stop	0: Stop 1: Run	Read/Write			O
53	Control Heat. OTC Zone 1	0: No 1: Points 2: Gradient 3: Fix	Read/Write			O
54	Control Cool. OTC 1	0: No 1: Points 2: Fix	Read/Write			O

Offset	Description	Values	Read/Write	Availability		
				VRF	RAC	ATW
55	Control Circuit 1: Water heating Fix Setting Temp	0~80	Read/Write			O
56	Control Circuit 1: Water cooling Fix Setting Temp	0~80	Read/Write			O
57	Control Circuit 1: Eco mode	0: ECO 1: Comfort	Read/Write			O
58	Control Circuit 1: Heat ECO Offset Temperature	1~10	Read/Write			O
59	Control Circuit 1: Cool ECO Offset Temperature	1~10	Read/Write			O
60	Control Circuit 1: External MBS/KNX Thermostat Available	0: Not Available 1: Available	Read/Write			O
61	Control Zone 1: Thermostat Setting	0~65535	Read/Write			O
62	Control Zone 1: Room Ambient Temperature	-32667~32667	Read/Write			O
63	Control Circuit 2 Run/Stop	0: Stop 1: Run	Read/Write			O
64	Control Heat. OTC Zone 2	0: No 1: Points 2: Gradient 3: Fix	Read/Write			O
65	Control Cool. OTC Zone 2	0: No 1: Points 2: Fix	Read/Write			O
66	Control Circuit 2: Water heating Fix Setting Temp	0~80	Read/Write			O
67	Control Circuit 2: Water cooling Fix Setting Temp	0~80	Read/Write			O
68	Control Circuit 2: Eco mode	0: ECO 1: Comfort	Read/Write			O
69	Control Circuit 2: Heat ECO Offset Temperature	1~10	Read/Write			O
70	Control Circuit 2: Cool ECO Offset Temperature	1~10	Read/Write			O
71	Control Circuit 2: External MBS/KNX Thermostat Available	0: Not Available 1: Available	Read/Write			O
72	Control Zone 2: Thermostat Setting	0~65535	Read/Write			O
73	Control Zone 2: Room Ambient Temperature	-32667~32667	Read/Write			O
74	Control DHWT Run/Stop	0: Stop 1: Run	Read/Write			O
75	Control DHWT Setting Temperature	0~80	Read/Write			O
76	Control DHW Boost	0: No request 1: Request	Read/Write			O
77	Reserved					
78	Control DHW Demand Mode	0: Standard 1: High demand	Read/Write			O
79	Control Swiming Pool Run/Stop	0: Stop 1: Run	Read/Write			O
80	Control Swiming Pool Setting Temperature	0~80	Read/Write			O
81	Control AntiLegionella Run/Stop	0: Stop 1: Run	Read/Write			O

Offset	Description	Values	Read/Write	Availability		
				VRF	RAC	ATW
82	Control AntiLegionella Setting Temperature	0~80	Read/Write			O
83	Control Block menu	0: No 1: Block (user cannot access the menu)	Read/Write			O
84	Control Yutaki Forced OFF	0: Normal Operation 1: Forced OFF	Read/Write			O
85	Space Heating Heater Forced OFF	0: Normal Operation 1: Heater Forced OFF	Read/Write			O
86	Control Communication Alarm bit	0: No 1: Alarm	Read/Write			O
87~99	Reserved					
100	Status Unit Run/Stop	0: Stop 1: Run	Read			O
101	Status Mode	B0: 0: Cool / 1: Heat B1: 0: Normal / 1: Auto	Read			O
102	Status Circuit 1 Run/Stop	0: Stop 1: Run	Read			O
103	Status Heat. OTC 1	0: No 1: Points 2: Gradient 3: Fix	Read			O
104	Status Cool. OTC 1	0: No 1: Points 2: Fix	Read			O
105	Status Circuit 1: Water heating Fix Setting Temp	0~80	Read			O
106	Status Circuit 1: Water cooling Fix Setting Temp	0~80	Read			O
107	Status Circuit 1: Eco mode	0: ECO 1: Comfort	Read			O
108	Status Circuit 1: Heat ECO Offset Temperature	1~10	Read			O
109	Status Circuit 1: Cool ECO Offset Temperature	1~10	Read			O
110	Status Circuit 1: Thermostat Setting Temperature	50~350 (5,0~35,0)	Read			O
111	Status Circuit 1: Thermostat Room Temperature	0~1000 (0,0~100,0)	Read			O
112	Status Circuit 1: Wireless Setting Temperature	50~350 (5,0~35,0)	Read			O
113	Status Circuit 1: Wireless Room Temperature	0~1000 (0,0~100,0)	Read			O
114	Status Circuit 2 Run/Stop	0: Stop 1: Run	Read			O
115	Status Heating OTC 2	0: No 1: Points 2: Gradient 3: Fix	Read			O
116	Status Cooling OTC 2	0: No 1: Points 2: Fix	Read			O

Offset	Description	Values	Read/Write	Availability		
				VRF	RAC	ATW
117	Status Circuit 2: Water heating Fix Setting Temp	0~80	Read			O
118	Status Circuit 2: Water cooling Fix Setting Temp	0~80	Read			O
119	Status Circuit 2: Eco mode	0: ECO 1: Comfort	Read			O
120	Status Circuit 1: Heat ECO Offset Temperature	1~10	Read			O
121	Status Circuit 1: Cool ECO Offset Temperature	1~10	Read			O
122	Status Zone 2: Thermostat Setting	50~350 (5,0~35,0)	Read			O
123	Status Zone 2: Ambient Temperature	0~1000 (0,0~100,0)	Read			O
124	Status Circuit 2: Wireless Setting Temperature	50~350 (5,0~35,0)	Read			O
125	Status Circuit 2: Wireless Room temperature	0~1000 (0,0~100,0)	Read			O
126	Status DHWT Run/Stop	0: Stop 1: Run	Read			O
127	Status DHWT Setting Temperature	0~80	Read			O
128	Status DHW Boost	0: Disable 1: Enable	Read			O
129	Reserved					
130	Status DHW Demand Mode	0: Standard 1: High demand	Read			O
131	Status DHW Temperature	-80~100	Read			O
132	Status Swim.Pool Run/Stop	0: Stop 1: Run	Read			O
133	Status Swim. Pool Setting Temperature	0~80	Read			O
134	Status Swim. Pool Temperature	-80~100	Read			O
135	Status AntiLeg. Run/Stop	0: Stop 1: Run	Read			O
136	Status AntiLeg.Setting Temperature	0~80	Read			O
137	Status block menu	0: No 1: Block	Read			O
138	Status Communication Alarm bit	0: No 1: Alarm	Read			O
139	LCD Central Mode	0: Local 1: Air (Not available for Yutampo) 2:Water (Not available for Yutampo) 3: Full	Read			O

Offset	Description	Values	Read/Write	Availability		
				VRF	RAC	ATW
140	System Configuration	b0: Zone 1 Heating Available	Read			O
		b1: Zone 2 Heating Available				
		b2: Zone 1 Cooling Available				
		b3: Zone 2 Cooling Available				
		b4: DHWT Available				
		b5: SWP Available				
		b6: Room thermostat available Zone 1				
		b7: Room thermostat available Zone 2				
		b8: Wireless Setting C1				
		b9: Wireless Setting C2				
		b10: Wireless Room Temperature C1				
		b11: Wireless Room Temperature C2				
		b12: Slave Unit				
141	Operation State	0: OFF	Read			O
		1: Cool Demand –OFF				
		2: Cool Thermo-OFF				
		3: Cool Thermo-ON				
		4: Heat Demand-OFF				
		5: Heat Thermo-OFF				
		6: Heat Thermo-ON				
		7: DHW-OFF				
		8: DHW-ON				
		9: SWP-OFF				
		10: SWP-ON				
		11: Alarm				
142	Outdoor Ambient Tº	-80~100	Read			O
	(Outdoor ambient temperature)					
143	Water Inlet Tº	-80~100	Read			O
	(Water Inlet unit temperature)					
144	Water outlet Tº	-80~100	Read			O
	(Water outlet unit temperature)					
145	H-Link Communication State	0: No alarm	Read			O
		1: There is no communication with RCS or Yutaki unit during more than 180 seconds				
		2: Data initialization				
146	Software PCB		Read			O
147	Software LCD		Read			O
148	Unit Capacity		Read			O
149	Unit Power Consumption		Read			O
150	Water Outler HP (TwoHP)	0~100 Only for Yutaki S & S Combi	Read			O
151	Ta1av: Outdoor Unit Ambient Average Temperature	-80~100	Read			O

Offset	Description	Values	Read/Write	Availability		
				VRF	RAC	ATW
152	Ta2: Second Ambient Temperature (inst)	-80~100	Read			O
153	Ta2av: Second Ambient Temperature (avg)	-80~100				O
154	O2: Water outlet Temp 2 (Two2)	-80~100	Read			O
155	O3: Water outlet Temp 3 (Two3)	-80~100	Read			O
156	Tg: Gas Temperature (THMg)	-80~100	Read			O
157	Tl: Liquid Temperature (THMl)	-80~100	Read			O
158	EVI: Indoor expansion valve openning	0~100	Read			O
159	CD: Capacity Data		Read			O
160	Mixing Valve Opening	0~100	Read			O
161	Defrosting	0: No defrosting	Read			O
		1: Defrosting				
162	Unit Model	0: Yutaki S	Read			O
		1: Yutaki SC				
		2: Yutaki S80				
		3: Yutaki M				
		4: Yutaki SC Lite (New)				
		5: Yutampo (New)				
		6: YCC (New)				
163	Th: Water Temp Setting (Ttwo)	-80~100	Read			O
164	Water Flow	Water Flow [0.1m3/h]	Read			O
165	Pump Speed	0~100	Read			O
166	System status 2	Bit 0: Defrost	Read			O
		Bit 1: Solar				
		Bit 2: Water Pump 1				
		Bit 3: Water Pump 2				
		Bit 4: Water Pump 3				
		Bit 5: Compressor ON				
		Bit 6: Boiler ON				
		Bit 7: DHW Heater				
		Bit 8: Space Heater				
		Bit 9: Smart function input enabled				
		Bit10: Forced OFF				
		Bit11: DHW recirculation Pump State				
		Bit12: Solar Pump Output State				
167	Alarm number	0: Alarm	Read			O
		XXX: Alarm number				
168	R134a Discharge Temperature		Read			O
169	R134a Suction temperature		Read			O
170	R134a Discharge Pressure		Read			O
171	R134a Suction pressure		Read			O
172	R134a Compressor frequency		Read			O
173	R134a Indoor Expansion valve opening		Read			O
174	R134a Compressor current value		Read			O
175	R134a Retry Code		Read			O
176	R134 Te SH		Read			O
177	R134 Secondary Current		Read			O

Offset	Description	Values	Read/Write	Availability		
				VRF	RAC	ATW
178	R134 Stop Code		Read			O
179~ 189	Reserved					
190	YCC - Enabled Units	0~8	Read			O
191	YCC - Working Units	0~8	Read			O
192	YCC - Required Units	0~8	Read			O

NOTE

- *Register address is calculated as: 5000+(Modbus_Id*200)+offset*
- *Modbus_Id as configured by configuration software*
- *For VRF / Package units, only the relevant data are available (heating units registers will not give any value). The situation is the same for heating units (registers related to air/air units will not give any value).*
- *Availability:*
  - PAC: VRF and package units.
  - RAC: Domestic units connected to the H-link via PSC-6RAD or SPX-RAMHLK
  - ATW: Air to water units.
- *(1) Take into account only if it is different from zero.*
- *(2) Bit 0 (ON/OFF) and Bit 4 (Louver) selectable only when all centrals are actived.*
- *In order to full lock setting from RCS (Central shown in RCS) set this register to 31*

5.3 OUTDOOR UNITS

Some state registers about outdoor unit have been added. Using these registers it is now possible to know the status of the refrigerant cycle. Some control registers have also been added.

Offset	Description	Values	Read/Write
0	Outdoor Air Temperature	-63ºC ~ 63ºC	Read
1	Compressor Discharge Temperature	0 ~ 200 ºC	Read
2	Heating Evaporating Temperature		Read
3	Number of operating Compressor		Read
4	Discharge Pressure	0.0 ~ 5.0 MPa (0.1 MPa)	Read
5	Suction Pressure	-0.2 ~2.0MPa (0.1 MPa or 0.01MPa depending unit)	Read
6	Total Current	0 ~ 255 A	Read
7	Total Real Frequency	0 ~ 255 Hz	Read
8	EVO1	0 ~ 100 %	Read
9	EVO2 / Hot Bypass	0 ~ 100 %	Read
10	EVB	0 ~ 100 %	Read
11	Outdoor Unit Option Enabled	0: Disable 1: Enable (it's possible to use the following options, also if the value of register 16 "Power Level Set" is 1)	Read/Write
12	Noise Control Enabled	0: Disable 1: Enable (it's possible to send the noise level)	Read/Write
13	Noise Control Level Set	0~9 (See the service manual of Outdoor unit, function db)	Read/Write
14	Power Control Enabled	0: Disable 1: Enable (it's possible to send the power level)	Read/Write
15	Power Level	0~100%	Read/Write
16	Power Level Set	0~100%	Read
17	Power Level Current Value	0~100%	Read

Offset	Description	Values	Read/Write
18	Power Control Possible	0: Not possible	Read
		1: Possible	

NOTE

- *Register address is calculated as: 5000+(Modbus_Id*200)+offset*
- *Modbus_Id as configured by configuration software*

5.4 OPTIONAL FUNCTIONS

Some optional functions of the indoor units have been added so that they can be managed from the BMS.

Offset	Description	Values	Read/Write
0	b1 (Heating temperature compensation)	0~4	Read/Write
1	b2 (Circulation function at heating Thermo-OFF)	0~1	Read/Write
2	b4 (Change of filter cleaning period)	0~4	Read/Write
3	c5 (Static pressure selection)	0~2	Read/Write
4	c8 (Control by the temperature sensor of the remote control switch)	0~2	Read/Write
5	Cb (Selection of forced stoppage logic)	0~1	Read/Write
6	Cd (Stop of indoor unit fan during cooling Thermo-OFF conditions)	0~1	Read/Write
7	CE (Stop of indoor unit fan during heating Thermo-OFF conditions)	0~1	Read/Write
8	d1 (Management of indoor unit operation after a power supply cut off -option 1)	0~1	Read/Write
9	d3 (Management of indoor unit operation after a power supply cut off -option 2)	0~1	Read/Write
10	d4 (RPI(M) Prevention of low air outlet temperature in cooling mode)	0~1	Read/Write
11	d5 (Prevention of low air outlet temperature in heating mode)	0~1	Read/Write
12	E1 (KPI: Ventilation mode / Econofresh cooling mode)	0~2	Read/Write
13	E2 (KPI: Increase of air supply volume / Econofresh enthalpy Sensor)	0~1	Read/Write
14	E4 (KPI: Pre-cooling / preheating period / Econofresh: CO2 sensor)	0~2	Read/Write
15	E8 (Control for stop of the indoor unit fan during heating Thermo-OFF conditions (with remote sensor THM-R2AE connected to the THM4 connector in the indoor unit PCB)	0~1	Read/Write
16	E9 (Intermittent fan operation in heating stop)	0~1	Read/Write
17	Eb (Indoor unit fan control during cooling Thermo-OFF conditions)	0~2	Read/Write
18	EE (Control in “Automatic” indoor fan speed mode)	0~1	Read/Write
19	EF (Control in “Automatic” indoor fan speed mode (supporting High H))	0~1	Read/Write
20	H4 (KPI: Operation modes for the ventilation unit with energy recovery)	0~1	Read/Write
21	K5 (Detection level of the motion sensor kit)	0~2	Read/Write
22	K6 (Selection of allowed operation modes when the control sensor of the indoor unit is set by C8 function)	0~3	Read/Write

NOTE

- *Register address is calculated as: 40000+(Modbus_Id*100)+offset*
- *Modbus_Id as configured by configuration software*

5.5 ALARM CODE LIST

Refer to Service Manual for the alarm explanation and repair procedure in case of Indoor Unit or Outdoor Unit alarm.

5.6 TROUBLESHOOTING

ALARM CODE	DESCRIPTION	COUNTERMEASURE
LED2 is flickering	Abnormal operation	Shut down the device power supply and restore it after 5 s. If LED2 is still flickering contact to the Hitachi customer service

6 NET CONFIGURATION KIT

This accessory provides all the necessary cables for Hitachi installers when commissioning a Modbus installation.

Components List:

USB cable		Ethernet crossed cable		USB Pen drive Memory	
1x		1x		1x	

The USB Pen Drive Memory includes a software tool for Modbus communication check when commissioning.

The USB cable in only required when configuring the device (network parameters)

The Ethernet cable is provided for a quick connection with a laptop for the Modbus communication check.

ESPAÑOL

1 GUÍA DEL PRODUCTO

1.1 NOMENCLATURA DE LAS UNIDADES

- Control del controlador de la interfaz
- Guión de separación
- Compatible con H-LINK II
- Número máximo de unidades controlables (8/16/64)
- MB: gateway Modbus
- NET: gateway para CSNET Manager

HC	-	A	X	X

1.2 MODELOS

DESCRIPCIÓN
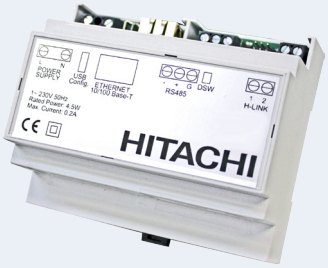
HC-A8MB
HC-A16MB
HC-A64MB
HC-A64NET

1.3 LISTA DE ACCESORIOS

DESCRIPCIÓN
Kit de configuración de la red

2 DATOS GENERALES DEL NUEVO PRODUCTO

2.3.1 Especificaciones del hardware

Elemento	Especificaciones
Alimentación	1~ 230 V ±10% 50 Hz
Consumo	4,5W (máximo)
Dimensiones exteriores	Ancho: 106 mm, Fondo: 90 mm, Alto: 58 mm
Peso	165 g
Condiciones de montaje	Interior (instalación en un lugar cerrado con acceso restringido)
Temperatura ambiente	0~60 ºC
Humedad	20~85% (sin condensación)

2.3.2 Comunicación

◆ RS485

Elemento	Especificaciones
Tipo	Modbus RTU para HC-A(8/16/64)MB
	No disponible para HC-A64NET
Conector	Puerto serie RS485 (3 terminales roscados)
Línea de comunicación	Cable de par trenzado apantallado, con un tercer cable (para el común), con polaridad
Sistema de comunicaciones	Conexión serie multipunto, semidúplex
Método de comunicación	Sin paridad o selección de paridad par/impar. Longitud de datos: 8 bits - 1 bit de parada
Velocidad transmisión (Baudios)	19200/9600 Baudios
Largo	Máx. 1200 m de acuerdo con EIA-485

◆ Ethernet

Elemento	Especificaciones
Tipo	Modbus TCP para HC-A(8/16/64)MB
	Comunicación TCP/IP para HC-A64NET
Conector	Ethernet (RJ45)
Línea de comunicación	Dos cables de par trenzado CAT5 o superior (T-568A/T-568B)
Sistema de comunicaciones	Dúplex completo
Largo	Máx. 100 m conforme a IEEE 802.3

◆ H-LINK

Elemento	Especificaciones
Comunicación con	HC-A(16/64)MB: sistemas SET FREE, UTOPIA, CENTRIFUGAL y sistemas de CALEFACCIÓN HC-A8MB y HC-A64NET: sistemas SET FREE, UTOPIA y CENTRIFUGAL
Línea de comunicación	Cable de par trenzado blindado, no polarizado
Sistema de comunicaciones	Semidúplex
Método de comunicación	Asíncrono
Velocidad de transmisión	9600 baudios
Longitud del cableado	1000 m máximo (longitud total del bus H-LINK I/E)
Número máximo de gateways	1 Gateway (HC-A(8/16/64)MB) / SISTEMA H-LINK
Número máximo de UI	HC-A64MB → hasta 64 * unidades interiores
	HC-A16MB → hasta 16 * unidades interiores
	HC-A8MB → hasta 8 * unidades interiores
	HC-A64NET → hasta 64* unidades interiores

3 INSTALACIÓN

3.1 RESUMEN DE SEGURIDAD

PELIGRO

- ***Lea atentamente este manual antes de realizar cualquier trabajo de instalación.***
- ***No instale este dispositivo en lugares a los que pueda acceder el público general. Instálelo en armarios eléctricos accesibles solo mediante el uso de una herramienta y protéjalo frente a eventuales perturbaciones electromagnéticas.***
- ***Asegúrese de haber instalado correctamente el dispositivo antes de conectar la alimentación eléctrica. Desconecte siempre la alimentación eléctrica antes de realizar cualquier trabajo de mantenimiento en el dispositivo.***

PRECAUCIÓN

- *Este dispositivo debe ser utilizado únicamente por un adulto o por una persona responsable que haya recibido formación o instrucciones técnicas de cómo manipularlo de forma adecuada y segura.*
- *Este es un producto de Clase A. En un ambiente doméstico, este dispositivo puede provocar interferencias de radio, en cuyo caso el usuario deberá tomar las medidas adecuadas.*
- *Es preciso vigilar a los niños para que no jueguen con el dispositivo.*
- *Asegúrese de que los componentes eléctricos suministrados por el instalador (interruptores de alimentación principal, disyuntores, cables, conectores y terminales de cables) se hayan seleccionado correctamente según los datos eléctricos indicados en este documento y que cumplen con la normativa local y nacional. Si fuera necesario contacte con la autoridad local correspondiente para obtener información acerca de la normativa, leyes, reglamentos, etc.*
- *No instale gateways de red / Modbus en lugares:*
  - *en los que algún vapor, aceite u otro líquido disperso pueda afectar al dispositivo.*
  - *en los que se detecte generación, acumulación o fugas de gases inflamables.*
  - *cercanos a alguna fuente de calor o de ruido electromagnético.*
  - *cercanos al mar, en entornos salinos, ácidos o alcalinos.*

3.2 COMPONENTES SUMINISTRADOS DE FÁBRICA

Dispositivo Gateway		Manual de instrucciones		Memoria USB	
1x		1x		1x	

3.3 DATOS DIMENSIONALES

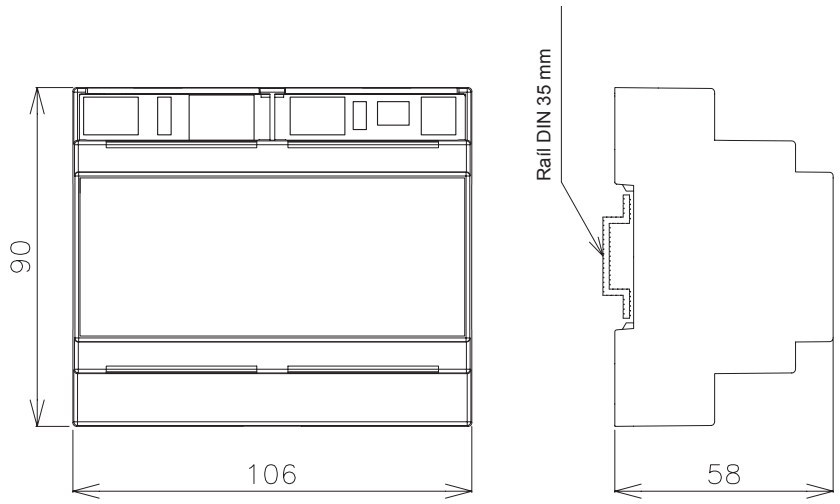

3.4 DESCRIPCIÓN DE LAS PIEZAS

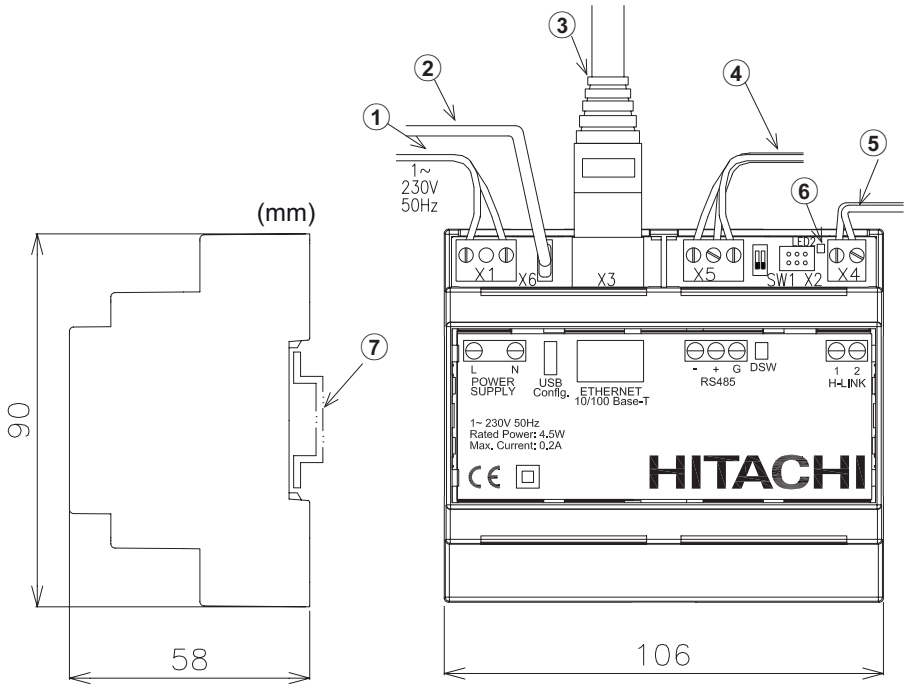

Nº	Descripción
1	Fuente de alimentación externa
2	Cable USB para la configuración
3	Ethernet RJ45 HC-A(8/16/64)MB: Modbus TCP HC-A64NET : TCP/IP
4	RS485 Modbus RTU para HC-A(8/16/64)MB No disponible para HC-A64NET
5	Bus de comunicaciones H-LINK con unidades Hitachi
6	Led indicador de funcionamiento
7	Rail DIN 35 mm para montaje en el interior de la caja eléctrica

3.5 ESPACIO DE INSTALACIÓN

Para que el dispositivo funcione correctamente mantenga libre la zona sombreada.

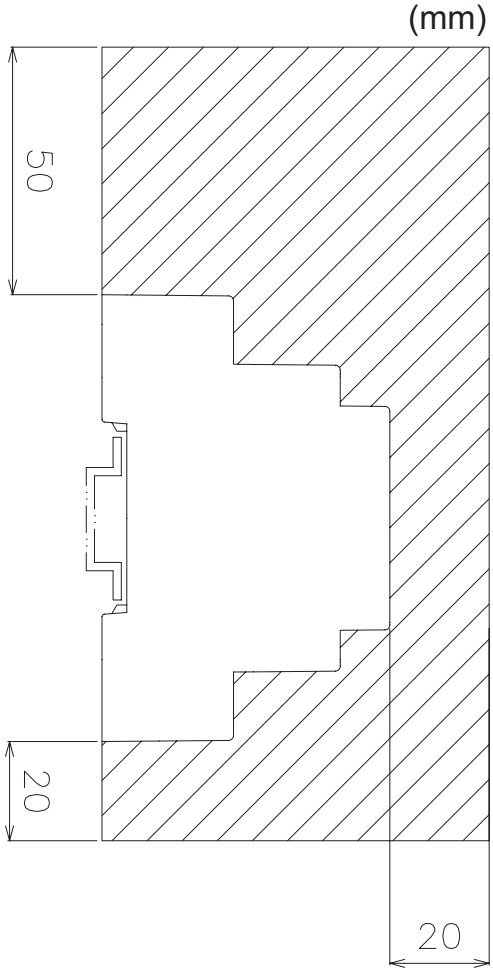

3.6 PROCEDIMIENTO DE INSTALACIÓN

⚠ PELIGRO

- ***No instale este dispositivo en lugares a los que pueda acceder el público general. Instálelo en lugares cerrados a los que solo se pueda acceder con llave.***
- ***Asegúrese de haber instalado correctamente el dispositivo antes de conectar la alimentación eléctrica. Desconecte siempre la alimentación eléctrica antes de realizar cualquier trabajo de mantenimiento o reparación en el dispositivo.***

⚠ PRECAUCIÓN

- *Asegúrese de que los componentes eléctricos suministrados por el instalador (interruptores de alimentación principal, disyuntores, cables, conectores y terminales de cables) se hayan seleccionado correctamente según los datos eléctricos indicados en este documento y que cumplen con la normativa local y nacional.*
- *Cualquier unidad no conectada o que no reciba alimentación cuando arranque las gateways de red / Modbus no será reconocida y deberá configurarse posteriormente.*
  - *Antes de alimentar y arrancar las gateways de red / Modbus, asegúrese de que:*
    - ◆ *1. Todos los circuitos están correctamente conectados.*
    - ◆ *2. Se han realizado todas las conexiones H-Link.*
    - ◆ *3. Se ha conectado correctamente el Modbus.*
- *Los cables de señal deben ser lo más cortos posible. Deje una distancia de 150 mm como mínimo entre otros cables de alimentación. No los conecte juntos (aunque pueden cruzarse). Si fuera necesario instalarlos juntos, adopte las siguientes medidas para evitar ruidos:*
  - *Para las comunicaciones, utilice cable blindado conectado a tierra en un extremo.*

3.7 CONFIGURACIÓN DE RED

En la memoria USB se suministra un software, el “Net configuration Tool”, para facilitar la configuración.

3.7.1 Requisitos del ordenador

Se requiere el uso de un ordenador con Microsoft Windows 7 o superior, un puerto USB libre y Java.

3.7.2 Parámetros configurables:

- *Paridad: Impar/Par/Desactivado*
- *Velocidad de comunicación: 9600/19200 bps*
- *Dirección Modbus*
- *Modbus TCP IP*

3.7.3 Procedimiento de configuración

◆ Configuración a través de un puerto USB

Este método es necesario cuando se desconoce el terminal IP.

1. Conecte el dispositivo de red a un ordenador mediante el cable USB (suministrado por el instalador o disponible con el kit de configuración de red)
2. Seleccione el puerto de comunicación del ordenador.
3. Pulse en la pantalla

◆ Configuración a través de un puerto Ethernet

1 Conecte el dispositivo de red a un ordenador mediante el cable ethernet (suministrado por el instalador o disponible con el kit de configuración de red o bien con el CSNET MANAGER)

2 Introduzca los siguientes parámetros:

- Dirección IP: 192.168.0.4
- Puerto: Modbus Gateway/ HC-A64NET

3 Pulse en la pantalla

◆ Configuración del dispositivo y la comunicación

HC-A(8/16/64)MB

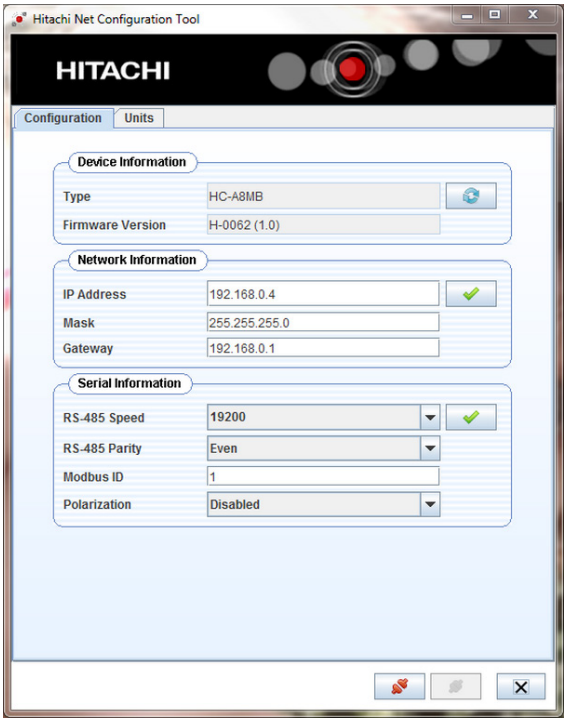

HC-A64NET

"Información del dispositivo"

Compruebe que el dispositivo de red se muestre en la tabla "Información del dispositivo". Pulse actualizar si es necesario.

“Información de red”

Si el dispositivo de red está integrado en una red LAN / Modbus a través de Ethernet, configure los siguientes parámetros:

- Dirección IP: permite modificar la IP del puerto del dispositivo de red (“192.168.0.4” de forma predeterminada).
- Máscara: utilice 255.255.255.0 como predeterminada o pregunte a su técnico informático el valor correcto (“255.255.255.0” de forma predeterminada).
- Gateway: dirección de la getaway LAN (“192.168.0.1” de forma predeterminada).

“Información de serie”

Si el dispositivo de red está integrado en una red Modbus a través del puerto serie RS485, configure los siguientes parámetros:

- RS485: 9600/19200 bps (“19200” bps de forma predeterminada)
- RS485: Paridad Ninguno/Impar/Par (“Par” de forma predeterminada)
- Id del Modbus: 1~128 (“1” de forma predeterminada)
- Polarización: Comunicación: polarización (“Desactivado” de forma predeterminada)

NOTA

Este apartado no está disponible para el modelo HC-A64NET

“Configuración de la Id de las unidades”

- Pulsado se ejecutará el direccionamiento automático
- La configuración manual se puede realizar asignando una Id a cada dirección H-LINK
  - *Dirección de la unidad exterior (Ou) y dirección de la unidad interior (Iu)*

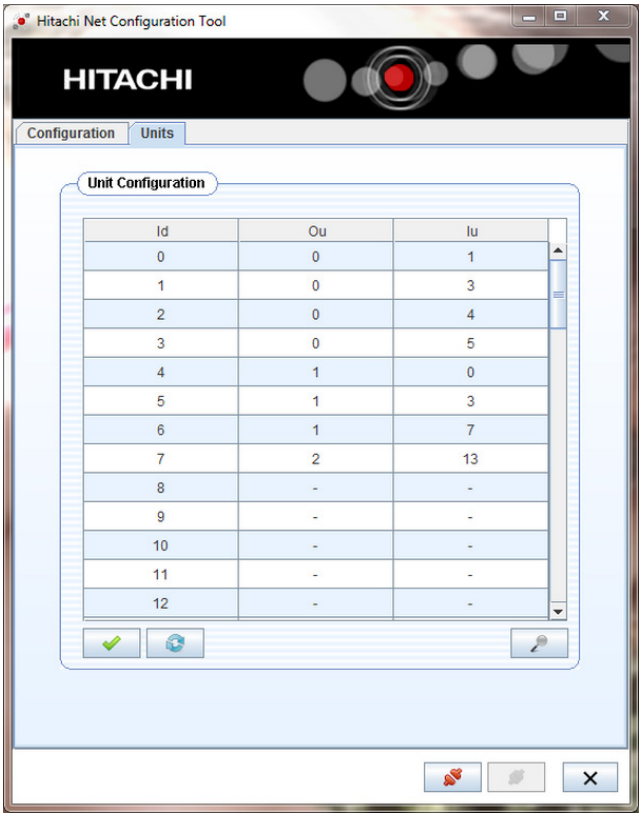

Id	Ou	Iu
0	0	1
1	0	3
2	0	4
3	0	5
4	1	0
5	1	3
6	1	7
7	2	13
8	-	-
9	-	-
10	-	-
11	-	-
12	-	-

- Confirme la configuración pulsando
- Pulse el botón de actualización cuando modifique las unidades conectadas a la red.

NOTA

Este apartado no está disponible para el modelo HC-A64NET

4 CABLEADO ELÉCTRICO

Nombre	Conexión	Especificaciones del cable
X1	Fuente de alimentación (1)	Utilice cables de 0,75 mm2 que no sean más ligeros que el cable flexible forrado de policloropreno (código 60245 IEC 57).
X3	Ethernet (1)	Cables LAN de categoría 5 o superior Conexión al ordenador: Utilice cable cruzado (un juego de cable en el kit de configuración de red) para la conexión directa. Conexión LAN: Se necesita un cable directo (suministrado para el instalador) para la conexión a un distribuidor comercial (Hub).
X4	H-LINK (1)	Cable de par trenzado blindado de 0,75 mm². El blindaje debe estar conectado a tierra solo por un extremo.
X5	RS485 (1)	Cable de tres núcleos de 0,75 mm² conectado a tierra solo por un extremo. Use colores distintos para cada cable.
X6	USB (1)	Cable conector USB mini B (un juego de cable en el kit de configuración de red

NOTA

(1) Estos cables serán suministrados por el instalador.

4.1 CONFIGURACIÓN DEL CONMUTADOR DIP

Nombre	Función	Ajuste de fábrica	Descripción
SW1	Configuración		SW1-1: Resistencia final del Modbus (*). SW1-2: No se utiliza (mantener siempre en "ON")

NOTA

(*) No aplica para el HC-A64NET.

5 FUNCIONAMIENTO

5.1 COMPATIBILIDAD

Estos dispositivos no son compatibles con ninguno de los siguientes controladores de Hitachi:

- *Mandos a distancia centralizados*
- *Controles del aire acondicionado de edificios (*)*
- *Otros gateways BMS de Hitachi (LONWORKS, BACNET, KNX, FIDELIO)*
- *Otros gateways MODBUS de Hitachi*
- *Otras unidades del mismo modelo*

NOTA

(*) El HC-A64NET es compatible con CSNET Manager.

ESPAÑOL

5.2 UNIDADES INTERIORES

5.2.1 Datos disponibles para HC-A(8/16/64)MB

Offset (1)	Nombre	Descripción	Valores	Lectura/escritura
0	EXIST	Existe	0: No existe 1: Existe	Lectura
1	SYSTEM_ADDRESS	Dirección del sistema	0~63	Lectura
2	UNIT_ADDRESS	Dirección de la unidad		
3	SET_ONOFF	Orden de ajuste de marcha/paro	0: Paro 1: Marcha	Lectura/escritura
4	SET_MODE	Orden de ajuste del modo	0: Frío 1: Deshumidificación 2: Ventilador 3: Calor 4: Auto	Lectura/escritura
5	SET_FAN	Orden de ajuste del ventilador	0: Baja 1: Media 2: Alta 3: High2 4: Auto	Lectura/escritura
6	SET_TSET	Temperatura de ajuste	ºC (Configure de acuerdo al rango de trabajo de la unidad)	Lectura/escritura
7	SET_LOUVER	Ajuste del deflector	0 ~ 7 (7 es automático)	Lectura/escritura
8	SET_CENTRAL	Ajuste central (3)	Bit 0: On/Off (siempre se puede parar) Bit 1: Modo Bit 2: Temp. ajustada Bit 3: Ventilador Bit 4: deflector	Lectura/escritura
9	READ_ONOFF	Estado de On/Off	0: Off 1: On	Lectura
10	READ_MODE	Estado del modo	0: Frío 1: Deshumidificación 2: Ventilador 3: Calor 4: Auto	Lectura
11	READ_FAN	Estado del ventilador	0: Baja 1: Media 2: Alta 3: High2 4: Auto	Lectura
12	READ_TSET	Estado de la temperatura de ajuste	ºC (Configure de acuerdo al rango de trabajo de la unidad)	Lectura
13	READ_LOUVER	Estado del deflector	0 ~ 7 (7 es automático)	Lectura
14	(no se utiliza)	(no se utiliza)	(no se utiliza)	(no se utiliza)
15	TIN	Lectura de la temperatura de entrada (2)	-63ºC ~ 63ºC	Lectura
16	TOUT	Lectura de la temperatura de salida (2)	-63ºC ~ 63ºC	Lectura
17	TGAS	Lectura de la temperatura de la tubería de gas (2)	-63ºC ~ 63ºC	Lectura
18	TLIQUID	Lectura de la temperatura de la tubería de líquido (2)	-63ºC ~ 63ºC	Lectura
19	ERROR_CODE	Código de alarma	Alarma de la unidad desde la pantalla 7 segmentos	Lectura
20	STOP_CAUSE	Causa de parada del compresor	(consulte el manual de servicio)	Lectura
21	VALVE_OPEN	Apertura de la válvula de expansión de la unidad interior	0~100	(no se utiliza)
22	OPER_CONDITION	Condición de funcionamiento de la unidad	0: OFF 1: Thermo OFF 2: Termostato encendido 3: Alarma	Lectura

Offset (1)	Nombre	Descripción	Valores	Lectura/escritura
23	(no se utiliza)	(no se utiliza)	(no se utiliza)	(no se utiliza)
24	AMBIENT TEMPERATURE	Temperatura ambiente (2)	-63ºC ~ 63ºC	Lectura
25	RCS_TEM	Temperatura del mando a distancia (solo si está disponible en la unidad) (2)	-63ºC ~ 63ºC	Lectura
26	RCS_CONFIG	Configuración de interruptor de control remoto	b0: 0 Maestro / 1 Esclavo b1: 0 con mando a distancia / 1 sin mando a distancia	Lectura/escritura
27	RCS_GROUP	Grupo de interruptores de control remoto	0: sin grupo 1~255	Lectura/escritura
28~30	(no se utiliza)	(no se utiliza)	(no se utiliza)	(no se utiliza)
31	REM_TEM	Temperatura del sensor remoto (2)	-63ºC ~ 63ºC	Lectura

NOTA

- *(1) La dirección de registro se calcula del siguiente modo: "N + (Dirección * 32) + Offset" donde:*
- *N: La posición en la tabla de datos en la 2000, la posición 20000 está también disponible para mantener la compatibilidad con la gateway Modbus antigua.*
- *Dirección: dirección de la unidad interior configurada por el software.*
- *(2) Estos números hacen referencia a un valor de 16 bits que utiliza un formato de 2 complementos para valores negativos.*
- *(3) Bit 0 (on/off) y Bit 4 (deflector) seleccionables solo cuando todas las centrales estén activadas.*
- *Para bloquear completamente los ajustes desde el mando a distancia (el mando a distancia indica central), establezca este registro en 31.*

5.2.2 Datos disponibles para HC-A(16/64)MB

Offset	Descripción	Valores	Lectura/escritura	Disponibilidad		
				VRF	Adaptador	ATW
0	Existe	0: No exist	Lectura	O	O	
		1: Exist				
1	Dirección del sistema	H-LINK 1: 0~15	Lectura	O	O	
2	Dirección de la unidad	H-LINK 2: 0~63		O	O	
3	Type	0: Indoor Unit	Lectura	O	O	
4	Orden de ajuste de marcha/paro	0: Stop	Lectura/escritura	O	O	
		1: Run				
5	Orden de ajuste del modo	0: Cool	Lectura/escritura	O	O	
		1: Dry				
		2: Fan				
		3: Heat				
		4: Auto				
6	Orden de ajuste del ventilador	0: Low	Lectura/escritura	O	O	
		1: Medium				
		2: High				
		3: High2				
		4: Auto				
7	Ajuste de la temperatura	ºC (set according to the unit working range)	Lectura/escritura	O	O	
8	Temperature setting with 0.5°C intervals	ºC x 10 (19.5ºC read as 195)	Lectura/escritura	O		
9	Heating temperature setting for AUTO Cool/Heat	°C	Lectura/escritura	O		
10	Heating Temperature setting for AUTO Cool/heat with 0.5°C intervals	ºC x 10 (19.5ºC read as 195)	Lectura/escritura	O		
11	Cooling Temperature setting for AUTO Cool/heat	°C	Lectura/escritura	O		
12	Cooling Temperature setting for AUTO Cool/heat with 0.5°C intervals	ºC x 10 (19.5ºC read as 195)	Lectura/escritura	O		
13	Ajuste del deflector	0 ~ 7 (7 is Auto)	Lectura/escritura	O		
14	Central setting (2)	Bit 0: On/Off (always can be stopped)	Lectura/escritura	O	O	
		Bit 1: Mode				
		Bit 2: Setting Temp				
		Bit 3: Fan				
		Bit4: Louver				
15	Estado de On/Off	0: Off	Lectura	O	O	
		1: On				
16	Estado del modo	0: Cool	Lectura	O	O	
		1: Dry				
		2: Fan				
		3: Heat				
		4: Auto				

Offset	Descripción	Valores	Lectura/escritura	Disponibilidad		
				VRF	Adaptador	ATW
17	Estado del ventilador	0: Low 1: Medium 2: High 3: High2 4: Auto	Lectura	O	O	
18	Estado de la temperatura de ajuste	ºC (set according to the unit working range)	Lectura	O	O	
19	Temperature setting with 0.5°C intervals status	ºC x10 (19.5ºC read as 195)	Lectura	O		
20	Heating temperature setting for AUTO Cool/Heat status	°C	Lectura	O		
21	Heating Temperature setting for AUTO Cool/heat with 0.5°C intervals status	ºC x 10 (19.5ºC read as 195)	Lectura	O		
22	Cooling Temperature setting for AUTO Cool/heat status	°C	Lectura	O		
23	Cooling Temperature setting for AUTO Cool/heat with 0.5°C intervals status	ºC x 10 (19.5ºC read as 195)	Lectura	O		
24	Estado del deflector	0 ~ 7 (7 is Auto)	Lectura	O		
25	Air inlet temperature reading	-63 °C ~ 63 °C	Lectura	O		
26	Air outlet temperature reading	-63 °C ~ 63 °C	Lectura	O		
27	Lectura de la temperatura de la tubería del gas	-63 °C ~ 63 °C	Lectura	O		
28	Lectura de la temperatura de la tubería del líquido	-63 °C ~ 63 °C	Lectura	O		
29	Código de alarma	Alarma de la unidad desde la pantalla 7 segmentos	Lectura	O	O(1)	
30	Causa de parada del compresor	(consulte el manual de servicio)	Lectura	O		
31	Abertura de la válvula de expansión de la unidad interior	0~100	Lectura	O		
32	Condición de funcionamiento de la unidad	0: OFF 1: Thermo OFF 2: Thermo ON 3: Alarm	Lectura	O	O	
33	Remote temperature sensor (THM4) value	-63 °C ~ 63 °C	Lectura	O		
34	Remote control switch temperature (only when available in the unit)	-63 °C ~ 63 °C	Lectura	O	O	
35	Configuración del mando a distancia	b0: 0 Master/1Slave b1: 0 wih RCS/1 Without RCS	Lectura/escritura	O		
36	Grupo de mando a distancia	0: No group 1~255	Lectura/escritura	O		
37	CN3 Configuration status	b0: Input 1 open/close b1: Input 2 open/close b2: Enabled/Disabled (Indicates if the unit has CN3 enabled with any function)	Lectura	O		
38~49	Reservado					

Offset	Descripción	Valores	Lectura/escritura	Disponibilidad		
				VRF	Adaptador	ATW
50	Control de unidad Marcha/Paro	0: Stop 1: Run	Lectura/escritura			O
51	Control de unidad de modo	0: Cool 1: Heat	Lectura/escritura			O
52	Control de circuito 1 de Marcha/Paro	0: Stop 1: Run	Lectura/escritura			O
53	Control de calor. OTC Zone 1	0: No 1: Points 2: Gradient 3: Fix	Lectura/escritura			O
54	Control frío. OTC 1	0: No 1: Points 2: Fix	Lectura/escritura			O
55	Control Circuit 1: Water heating Fix Setting Temp	0~80	Lectura/escritura			O
56	Control Circuit 1: Water cooling Fix Setting Temp	0~80	Lectura/escritura			O
57	Control de circuito 1: modo ECO	0: ECO 1: Comfort	Lectura/escritura			O
58	Control de circuito 1: temperatura de compensación ECO de calefacción	1~10	Lectura/escritura			O
59	Control Circuit 1: Cool ECO Offset Temperature	1~10	Lectura/escritura			O
60	Control Circuit 1: External MBS/KNX Thermostat Available	0: Not Available 1: Available	Lectura/escritura			O
61	Control Zone 1: Thermostat Setting	0~65535	Lectura/escritura			O
62	Control Zone 1: Room Ambient Temperature	-32667~32667	Lectura/escritura			O
63	Control Circuit 2 Run/Stop	0: Stop 1: Run	Lectura/escritura			O
64	Control de calor. OTC Zone 2	0: No 1: Points 2: Gradient 3: Fix	Lectura/escritura			O
65	Control frío. OTC Zone 2	0: No 1: Points 2: Fix	Lectura/escritura			O
66	Control Circuit 2: Water heating Fix Setting Temp	0~80	Lectura/escritura			O
67	Control Circuit 2: Water cooling Fix Setting Temp	0~80	Lectura/escritura			O
68	Control Circuit 2: Eco mode	0: ECO 1: Comfort	Lectura/escritura			O
69	Control Circuit 2: Heat ECO Offset Temperature	1~10	Lectura/escritura			O

Offset	Descripción	Valores	Lectura/escritura	Disponibilidad		
				VRF	Adaptador	ATW
70	Control Circuit 2: Cool ECO Offset Temperature	1~10	Lectura/escritura			O
71	Control Circuit 2: External MBS/KNX Thermostat Available	0: Not Available 1: Available	Lectura/escritura			O
72	Control Zone 2: Thermostat Setting	0~65535	Lectura/escritura			O
73	Control Zone 2: Room Ambient Temperature	-32667~32667	Lectura/escritura			O
74	Control del depósito de ACS Marcha/ Paro	0: Stop 1: Run	Lectura/escritura			O
75	Control consigna del depósito ACS	0~80	Lectura/escritura			O
76	Control impulso de ACS	0: No request 1: Request	Lectura/escritura			O
77	Reservado					
78	Control modo de demanda de ACS	0: Standard 1: High demand	Lectura/escritura			O
79	Control piscina Marcha/Paro	0: Stop 1: Run	Lectura/escritura			O
80	Control piscina consigna	0~80	Lectura/escritura			O
81	Control antilegionela Marcha/Paro	0: Stop 1: Run	Lectura/escritura			O
82	Control antilegionela consigna	0~80	Lectura/escritura			O
83	Control Bloqueo/Desbloqueo Menú	0: No 1: Block (user cannot access the menu)	Lectura/escritura			O
84	Control Yutaki Forced OFF	0: Normal Operation 1: Forced OFF	Lectura/escritura			O
85	Space Heating Heater Forced OFF	0: Normal Operation 1: Heater Forced OFF	Lectura/escritura			O
86	Control error/alarma	0: No 1: Alarm	Lectura/escritura			O
87~99	Reservado					
100	Estado de la unidad marcha/paro	0: Stop 1: Run	Lectura			O
101	Status Mode	B0: 0: Cool / 1: Heat B1: 0: Normal / 1: Auto	Lectura			O
102	Status Circuit 1 Run/Stop	0: Stop 1: Run	Lectura			O
103	Estado calefacción. OTC 1	0: No 1: Points 2: Gradient 3: Fix	Lectura			O
104	Status Cool. OTC 1	0: No 1: Points 2: Fix	Lectura			O
105	Status Circuit 1: Water heating Fix Setting Temp	0~80	Lectura			O

Offset	Descripción	Valores	Lectura/escritura	Disponibilidad		
				VRF	Adaptador	ATW
106	Status Circuit 1: Water cooling Fix Setting Temp	0~80	Lectura			O
107	Estado del circuito 1: modo ECO	0: ECO 1: Comfort	Lectura			O
108	Estado de circuito 1: temperatura de compensación ECO de calefacción	1~10	Lectura			O
109	Status Circuit 1: Cool ECO Offset Temperature	1~10	Lectura			O
110	Estado de circuito 1: termostato de la temperatura de ajuste	50~350 (5,0~35,0)	Lectura			O
111	Estado de circuito 1: termostato de la temperatura de la habitación	0~1000 (0,0~100,0)	Lectura			O
112	Estado de circuito 1: temperatura de ajuste inalámbrico	50~350 (5,0~35,0)	Lectura			O
113	Estado de circuito 1: temperatura de la habitación inalámbrico	0~1000 (0,0~100,0)	Lectura			O
114	Estado de circuito 2 Marcha/Paro	0: Stop 1: Run	Lectura			O
115	Estado modo OTC 2 calefacción	0: No 1: Points 2: Gradient 3: Fix	Lectura			O
116	Estado modo OTC 2 enfriamiento	0: No 1: Points 2: Fix	Lectura			O
117	Status Circuit 2: Water heating Fix Setting Temp	0~80	Lectura			O
118	Status Circuit 2: Water cooling Fix Setting Temp	0~80	Lectura			O
119	Status Circuit 2: Eco mode	0: ECO 1: Comfort	Lectura			O
120	Estado de circuito 1: temperatura de compensación ECO de calefacción	1~10	Lectura			O
121	Status Circuit 1: Cool ECO Offset Temperature	1~10	Lectura			O
122	Status Zone 2: Thermostat Setting	50~350 (5,0~35,0)	Lectura			O
123	Status Zone 2: Ambient Temperature	0~1000 (0,0~100,0)	Lectura			O
124	Status Circuit 2: Wireless Setting Temperature	50~350 (5,0~35,0)	Lectura			O
125	Status Circuit 2: Wireless Room temperature	0~1000 (0,0~100,0)	Lectura			O
126	Estado depósito ACS Marcha/Paro	0: Stop 1: Run	Lectura			O
127	Estado depósito ACS consigna	0~80	Lectura			O
128	Status DHW Boost	0: Disable 1: Enable	Lectura			O
129	Reservado					

Offset	Descripción	Valores	Lectura/escritura	Disponibilidad		
				VRF	Adaptador	ATW
130	Estado modo de demanda de ACS	0: Standard	Lectura			O
		1: High demand				
131	Status DHW Temperature	-80~100	Lectura			O
132	Estado piscina Marcha/Paro	0: Stop	Lectura			O
		1: Run				
133	Status Swim. Pool Setting Temperature	0~80	Lectura			O
134	Status Swim. Pool Temperature	-80~100	Lectura			O
135	Status AntiLeg. Marcha/paro	0: Stop	Lectura			O
		1: Run				
136	Estado antilegionela consigna	0~80	Lectura			O
137	Estado Bloqueo/Desbloqueo Menú	0: No	Lectura			O
		1: Block				
138	Estado error/alarma	0: No	Lectura			O
		1: Alarm				
139	LCD modo central	0: Local	Lectura			O
		1: Air (Not available for Yutampo)				
		2:Water (Not available for Yutampo)				
		3: Full				
140	Configuración del Sistema	b0: Zone 1 Heating Available	Lectura			O
		b1: Zone 2 Heating Available				
		b2: Zone 1 Cooling Available				
		b3: Zone 2 Cooling Available				
		b4: DHWT Available				
		b5: SWP Available				
		b6: Room thermostat available Zone 1				
		b7: Room thermostat available Zone 2				
		b8: Wireless Setting C1				
		b9: Wireless Setting C2				
		b10: Wireless Room Temperature C1				
		b11: Wireless Room Temperature C2				
		b12: Slave Unit				

Offset	Descripción	Valores	Lectura/escritura	Disponibilidad		
				VRF	Adaptador	ATW
141	Estado de operación	0: OFF	Lectura			O
		1: Cool Demand –OFF				
		2: Cool Thermo-OFF				
		3: Cool Thermo-ON				
		4: Heat Demand-OFF				
		5: Heat Thermo-OFF				
		6: Heat Thermo-ON				
		7: DHW-OFF				
		8: DHW-ON				
		9: SWP-OFF				
		10: SWP-ON				
		11: Alarm				
142	Tº ambiente exterior (Outdoor ambient temperature)	-80~100	Lectura			O
143	Temperatura de entrada del agua (Water Inlet unit temperature)	-80~100	Lectura			O
144	Temperatura de salida del agua (Water outlet unit temperature)	-80~100	Lectura			O
145	H-Link Communication State	0: No alarm	Lectura			O
		1: There is no communication with RCS or Yutaki unit during more than 180 seconds				
		2: Data initialization				
146	Software de la PCB		Lectura			O
147	Software de la LCD		Lectura			O
148	Capacidad de la unidad		Lectura			O
149	Unit Power Consumption		Lectura			O
150	Water Outler HP (TwoHP)	0~100 Solo para YUTAKI S y S Combi	Lectura			O
151	Ta1av: Outdoor Unit Ambient Average Temperature	-80~100	Lectura			O
152	Ta2: Second Ambient Temperature (inst)	-80~100	Lectura			O
153	Ta2av: Second Ambient Temperature (avg)	-80~100				O
154	O2: Water outlet Temp 2 (Two2)	-80~100	Lectura			O
155	O3: Water outlet Temp 3 (Two3)	-80~100	Lectura			O
156	Tg: Gas Temperature (THMg)	-80~100	Lectura			O
157	Tl: Liquid Temperature (THMl)	-80~100	Lectura			O
158	EVI: Indoor expansion valve openning	0~100	Lectura			O
159	CD: Capacity Data		Lectura			O
160	Mixing Valve Opening	0~100	Lectura			O
161	Descarche	0: No defrosting	Lectura			O
		1: Defrosting				

Offset	Descripción	Valores	Lectura/escritura	Disponibilidad		
				VRF	Adaptador	ATW
162	Modelo de unidad	0: Yutaki S	Lectura			O
		1: Yutaki SC				
		2: Yutaki S80				
		3: Yutaki M				
		4: Yutaki SC Lite (New)				
		5: Yutampo (New)				
		6: YCC (New)				
163	Th: Water Temp Setting (Ttwo)	-80~100	Lectura			O
164	Caudal de agua	Water Flow [0.1m3/h]	Lectura			O
165	Pump Speed	0~100	Lectura			O
166	Estado del sistema 2	Bit 0: Defrost	Lectura			O
		Bit 1: Solar				
		Bit 2: Water Pump 1				
		Bit 3: Water Pump 2				
		Bit 4: Water Pump 3				
		Bit 5: Compressor ON				
		Bit 6: Boiler ON				
		Bit 7: DHW Heater				
		Bit 8: Space Heater				
		Bit 9: Smart function input enabled				
		Bit10: Forced OFF				
		Bit11: DHW recirculation Pump State				
		Bit12: Solar Pump Output State				
167	Número de alarma	0: Alarm	Lectura			O
		XXX: Alarm number				
168	Temperatura de descarga R134a		Lectura			O
169	Temperatura de aspiración R134a		Lectura			O
170	Presión de descarga R134a		Lectura			O
171	Presión de aspiración R134a		Lectura			O
172	Frecuencia del compresor R134a		Lectura			O
173	Apertura de la válvula de expansión interior R134a		Lectura			O
174	Valor actual del compresor R134a		Lectura			O
175	Código de reintento R134a		Lectura			O
176	R134 Te SH		Lectura			O
177	R134 Secondary Current		Lectura			O
178	R134 Stop Code		Lectura			O
179~189	Reservado					
190	YCC - Enabled Units	0~8	Lectura			O
191	YCC - Working Units	0~8	Lectura			O

Offset	Descripción	Valores	Lectura/escritura	Disponibilidad		
				VRF	Adaptador	ATW
192	YCC - Required Units	0~8	Lectura			O

NOTE

- *Register address is calculated as: 5000+(Modbus_Id*200)+offset*
- *Modbus_Id as configured by configuration software*
- *For VRF / Package units, only the relevant data are available (heating units registers will not give any value). The situation is the same for heating units (registers related to air/air units will not give any value).*
- *Availability:*
  - PAC: VRF and package units.
  - RAC: Domestic units connected to the H-link via PSC-6RAD or SPX-RAMHLK
  - ATW: Air to water units.
- *(1) Take into account only if it is different from zero.*
- *(2) Bit 0 (ON/OFF) and Bit 4 (Louver) selectable only when all centrals are actived.*
- *In order to full lock setting from RCS (Central shown in RCS) set this register to 31*

5.3 UNIDADES EXTERIORES

Some state registers about outdoor unit have been added. Using these registers it is now possible to know the status of the refrigerant cycle. Some control registers have also been added.

Offset	Descripción	Valores	Lectura/escritura
0	Temperatura del aire exterior	-63 °C ~ 63 °C	Lectura
1	Compressor Discharge Temperature	0 ~ 200 ºC	Lectura
2	Heating Evaporating Temperature		Lectura
3	Number of operating Compressor		Lectura
4	Presión de descarga	0.0 ~ 5.0 MPa (0.1 MPa)	Lectura
5	Presión de aspiración	-0.2 ~2.0MPa (0.1 MPa or 0.01MPa depending unit)	Lectura
6	Total Current	0 ~ 255 A	Lectura
7	Total Real Frequency	0 ~ 255 Hz	Lectura
8	EVO1	0 ~ 100 %	Lectura
9	EVO2 / Hot Bypass	0 ~ 100 %	Lectura
10	EVB	0 ~ 100 %	Lectura
11	Outdoor Unit Option Enabled	0: Disable	Lectura/escritura
		1: Enable (it's possible to use the following options, also if the value of register 16 "Power Level Set" is 1)	
12	Noise Control Enabled	0: Disable	Lectura/escritura
		1: Enable (it's possible to send the noise level)	
13	Noise Control Level Set	0~9 (See the service manual of Outdoor unit, function db)	Lectura/escritura
14	Power Control Enabled	0: Disable	Lectura/escritura
		1: Enable (it's possible to send the power level)	
15	Power Level	0~100%	Lectura/escritura
16	Power Level Set	0~100%	Lectura
17	Power Level Current Value	0~100%	Lectura
18	Power Control Possible	0: Not possible	Lectura
		1: Possible	

NOTE

- *Register address is calculated as: 5000+(Modbus_Id*200)+offset*
- *Modbus_Id as configured by configuration software*

5.4 FUNCIONES OPCIONALES

Some optional functions of the indoor units have been added so that they can be managed from the BMS.

Offset	Descripción	Valores	Lectura/escritura
0	b1 (Heating temperature compensation)	0~4	Lectura/escritura
1	b2 (Circulation function at heating Thermo-OFF)	0~1	Lectura/escritura
2	b4 (Change of filter cleaning period)	0~4	Lectura/escritura
3	c5 (Static pressure selection)	0~2	Lectura/escritura
4	c8 (Control by the temperature sensor of the remote control switch)	0~2	Lectura/escritura
5	Cb (Selection of forced stoppage logic)	0~1	Lectura/escritura
6	Cd (Stop of indoor unit fan during cooling Thermo-OFF conditions)	0~1	Lectura/escritura
7	CE (Stop of indoor unit fan during heating Thermo-OFF conditions)	0~1	Lectura/escritura
8	d1 (Management of indoor unit operation after a power supply cut off -option 1)	0~1	Lectura/escritura
9	d3 (Management of indoor unit operation after a power supply cut off -option 2)	0~1	Lectura/escritura
10	d4 (RPI(M) Prevention of low air outlet temperature in cooling mode)	0~1	Lectura/escritura
11	d5 (Prevention of low air outlet temperature in heating mode)	0~1	Lectura/escritura
12	E1 (KPI: Ventilation mode / Econofresh cooling mode)	0~2	Lectura/escritura
13	E2 (KPI: Increase of air supply volume / Econofresh enthalpy Sensor)	0~1	Lectura/escritura
14	E4 (KPI: Pre-cooling / preheating period / Econofresh: CO2 sensor)	0~2	Lectura/escritura
15	E8 (Control for stop of the indoor unit fan during heating Thermo-OFF conditions (with remote sensor THM-R2AE connected to the THM4 connector in the indoor unit PCB)	0~1	Lectura/escritura
16	E9 (Intermittent fan operation in heating stop)	0~1	Lectura/escritura
17	Eb (Indoor unit fan control during cooling Thermo-OFF conditions)	0~2	Lectura/escritura
18	EE (Control in “Automatic” indoor fan speed mode)	0~1	Lectura/escritura
19	EF (Control in “Automatic” indoor fan speed mode (supporting High H))	0~1	Lectura/escritura
20	H4 (KPI: Operation modes for the ventilation unit with energy recovery)	0~1	Lectura/escritura
21	K5 (Detection level of the motion sensor kit)	0~2	Lectura/escritura
22	K6 (Selection of allowed operation modes when the control sensor of the indoor unit is set by C8 function)	0~3	Lectura/escritura

NOTE

- *Register address is calculated as: 40000+(Modbus_Id*100)+offset*
- *Modbus_Id as configured by configuration software*

5.5 LISTA DE CÓDIGOS DE ALARMA

La dirección 19 indica el código de alarma que se muestra en la unidad interior. Consulte el Manual de Servicio para la explicación de la alarma y el procedimiento de reparación en caso de alarma en la unidad interior o exterior.

5.6 RESOLUCIÓN DE PROBLEMAS

CÓDIGO DE ALARMA	DESCRIPCIÓN	CONTRAMEDIDA
El LED2 parpadea	Funcionamiento anómalo	Apague la fuente de alimentación del dispositivo y enciéndala pasados 5 segundos. Si el LED2 sigue parpadeando póngase en contacto con el servicio de atención al cliente de Hitachi.

6 KIT DE CONFIGURACIÓN DE LA RED

Este accesorio proporciona al instalador de Hitachi todos los cables necesarios para poner en marcha la instalación del Modbus.

Lista de componentes:

Cable USB		Cable cruzado Ethernet		Memoria USB	
1x		1x		1x	

La memoria USB incluye un software para la comprobación de la comunicación Modbus en la puesta en marcha.

El cable USB es solo necesario durante la configuración del dispositivo (parámetros de red)

El cable Ethernet se proporciona para una conexión rápida con un ordenador portátil para la comprobación de la comunicación Modbus.

1 PRODUKTÜBERSICHT

1.1 KLASSIFIZIERUNG DER GERÄTE

- Interface Fernbedienungssteuerung
- Armaturenbrett-Trennung
- H-LINK II Kompatibel
- Maximale Anzahl der steuerbaren Geräte (8/16/64)
- MB: Modbus-Gateway
- NET: Gateway für CSNET-Manager

HC	-	A	X	X

1.2 MODELLE

BESCHREIBUNG
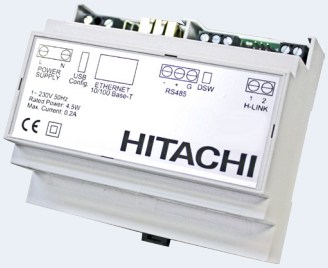
HC-A8MB
HC-A16MB
HC-A64MB
HC-A64NET

1.3 ZUBEHÖR-LISTE

BESCHREIBUNG
Netzkonfigurationsset

DEUTSCH

2 ALLGEMEINE DATEN DES NEUEN PRODUKTS

2.3.1 Technische Beschreibung der Hardware

Element	Spezifikationen
Stromversorgung	1~ 230 V ±10% 50 Hz
Verbrauch	4,5W (Maximum)
Außenabmessungen	Breite: 106 mm, Tiefe: 90 mm, Höhe: 58 mm
Gewicht	165 g
Montagebedingungen	Innen (Installation innen und Gehäuse mit begrenztem Zugang mit einem Werkzeug)
Umgebungstemperatur	0~60 ºC
Feuchtigkeit	20~85% (ohne Kondensation)

2.3.2 Kommunikation

◆ RS485

Element	Spezifikationen
Typ	Modbus RTU für HC-A(8/16/64)MB
	Nicht verfügbar für HC-A64NET
Anschluss	Serieller Anschluss RS485 (3-Schrauben-Anschluss)
Kommunikationsleitung	Abgeschirmtes Torsionskabel, mit drittem Draht (für die Datenleitung), mit Polarität.
Kommunikationssystem	Halbduplex, serieller Mehrpunktanschluss
Kommunikationsmethode	Ohne Parität oder Auswahl der ungeraden/geraden Parität. Daten-Länge: 8 Bit – 1 Stopp-Bit
Baudraten-Übertragung	19.200/9.600 Bauds
Länge	Max. 1200 m gemäß EIA-485

◆ Ethernet

Element	Spezifikationen
Typ	Modbus TCP für HC-A(8/16/64)MB
	TCP/IP-Kommunikation für HC-A64NET
Anschluss	Ethernet (RJ45)
Kommunikationsleitung	Zwei abgeschirmte paarverseilte Kabel CAT5 oder besser (T-568A/T-568B)
Kommunikationssystem	Voll-Duplex
Länge	Max. 100 m gemäß IEEE 802.3

◆ H-LINK

Element	Spezifikationen
Kommunikation mit	HC-A(16/64)MB: SET FREE-, UTOPIA-, CENTRIFUGAL- und HEATING-Systeme HC-A8MB und HC-A64NET: SET FREE-, UTOPIA- und CENTRIFUGAL-Systeme
Kommunikationsleitung	Abgeschirmtes Torsionskabel, ohne Polarität
Kommunikationssystem	Halbduplex
Kommunikationsmethode	Asynchron
Übertragungsgeschwindigkeit	9600 Bauds
Kabellänge	1000 m maximal (Gesamtlänge des H-LINK I/O-Busses)
Maximale Anzahl der Gateways	1 Gateway (HC-A8MB, HC-A64MB)/H-LINK SYSTEM
Maximale Anzahl der IG	HC-A64MB → bis zu 64 * Innengeräte
	HC-A16MB → bis zu 16 * Innengeräte
	HC-A8MB → bis zu 8 * Innengeräte
	HC-A64NET → bis zu 64 * Innengeräte

3 INSTALLATION

3.1 SICHERHEITSÜBERSICHT

GEFAHR

- ***Lesen Sie dieses Handbuch vor der Installation sorgfältig durch.***
- ***Dieses Gerät darf nicht öffentlich zugänglich sein. Montieren Sie es bitte in einem Schaltschrank, der nur mithilfe von einem Werkzeug geöffnet werden kann und außerdem Schutz bei elektromagnetischen Störungen bietet.***
- ***Erst nach der korrekten Geräteinstallation die Stromversorgung anschließen. Trennen Sie vor allen Wartungs- und Instandsetzungsarbeiten das Stromversorgungskabel vom Gerät.***

VORSICHT

- *Dieses Gerät darf nur von Erwachsenen und befähigten Personen betrieben werden, die zuvor technische Informationen oder Instruktionen zu dessen sachgemäßen und sicheren Handhabung erhalten haben.*
- *Dies ein Produkt für die Netzklasse A In häuslicher Umgebung kann es durch dieses Produkt eventuell zu Funkstörungen kommen, zu deren Verhinderung seitens des Benutzers geeignete Vorkehrungen zu treffen sind.*
- *Achten Sie darauf, dass Kinder nicht mit dem Gerät spielen.*
- *Vergewissern Sie sich, dass die vor Ort beschafften elektrischen Komponenten (Netzschalter, Stromkreisunterbrecher, Kabel, Stecker und Kabelanschlüsse) gemäß den angegebenen elektrischen Daten ausgewählt wurden und die nationalen und lokalen Bestimmungen erfüllen. Wenn notwendig, wenden Sie sich im Hinblick auf Normen, Vorschriften, Verordnungen usw. an die für Sie zuständige Behörde.*
- *Installieren Sie nicht Netzwerk-/ Modbus-Gateways an Orten:*
  - *an denen Dampf, Öl oder andere zerstreute Flüssigkeiten das Gerät beeinträchtigen können.*
  - *mit einer möglichen Aufstauung, Erzeugung, oder Leckage von entzündbaren Gasen.*
  - *in der Nähe von jeglichen Wärmequellen oder elektromagnetischen Geräuschquellen.*
  - *die sich in Meeresnähe, in salzhaltigen, säurehaltigen oder alkalinen Umgebungen befinden.*

DEUTSCH

3.2 WERKSEITIG GELIEFERTE KOMPONENTEN

Gateway-Gerät		Bedienungsanleitung		USB-Pen-Drive-Memory	
1x	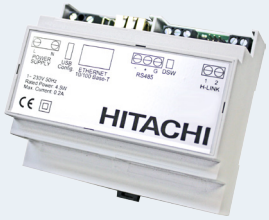	1x		1x	

3.3 ABMESSUNGEN

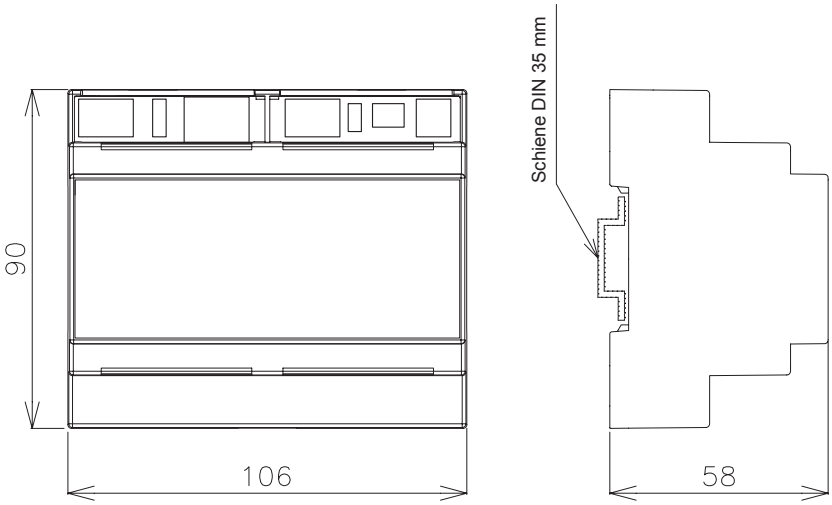

3.4 BESCHREIBUNG DER TEILE

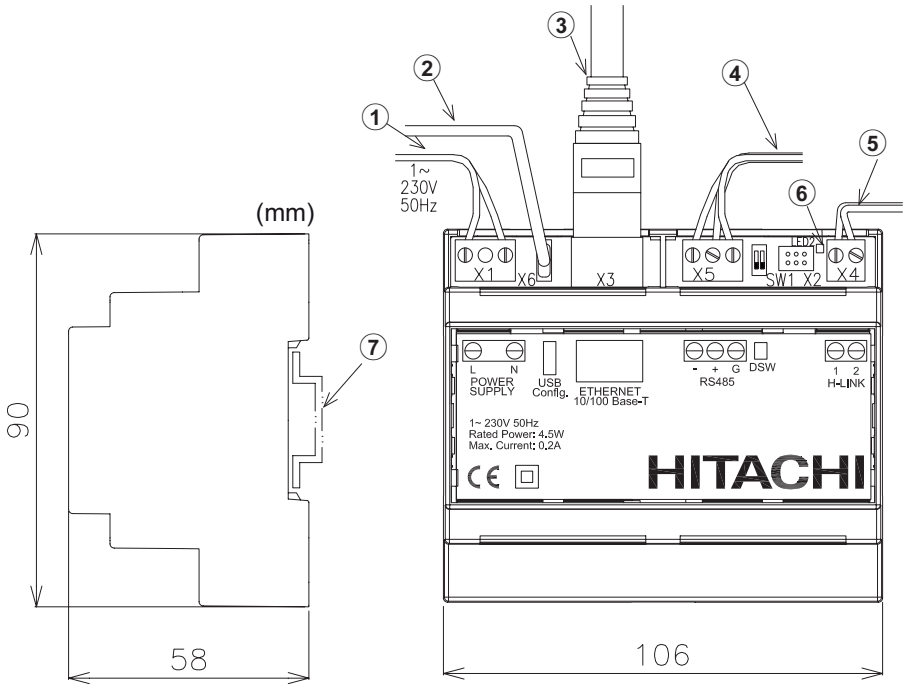

Nr.	Beschreibung
1	Externe Stromversorgung
2	USB-Kabel nur zum Zeitpunkt der Konfiguration
3	RJ45 Ethernet HC-A(8/16/64)MB: Modbus TCP HC-A64NET : TCP/IP
4	RS485 Modbus RTU für HC-A(8/16/64)MB Nicht verfügbar für HC-A64NET
5	H-LINK-Kommunikationsbus mit Hitachi-Geräten
6	LED-Betriebsanzeige
7	Schiene DIN 35 mm für den Zusammenbau innerhalb des Schaltkastens

3.5 INSTALLATIONSRAUM

Halten Sie den grauen Bereich für den korrekten Betrieb des Geräts frei.

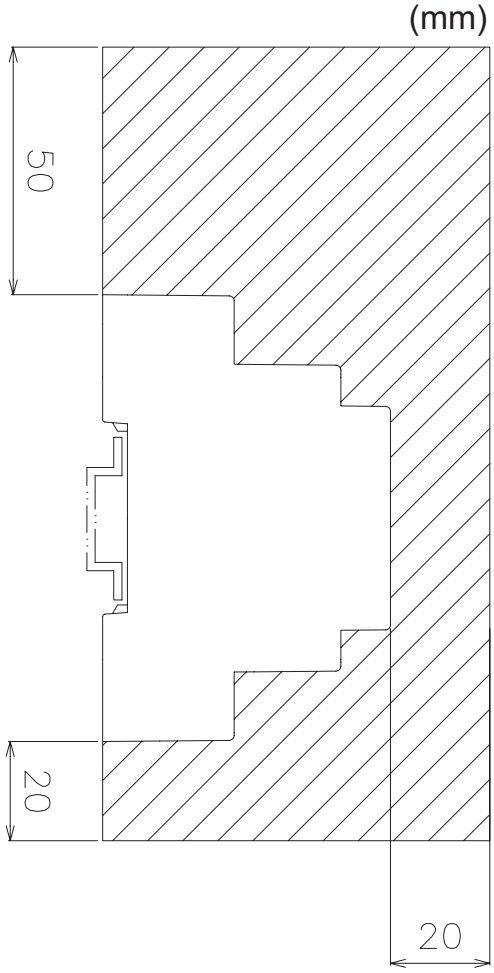

3.6 INSTALLATIONSSCHRITTE

⚠ GEFAHR

- ***Dieses Gerät muss an Orten installiert werden, die für die Öffentlichkeit unzugänglich sind. Installieren Sie es in Gehäusen oder an anderen Stellen, die nur mit einem Werkzeug zugänglich sind.***
- ***Erst nach der korrekten Geräteinstallation die Stromversorgung anschließen. Trennen Sie vor allen Wartungs- und Instandsetzungsarbeiten das Stromversorgungskabel vom Gerät.***

⚠ VORSICHT

- *Vergewissern Sie sich, dass die vor Ort beschafften elektrischen Komponenten (Netzschalter, Stromkreisunterbrecher, Kabel, Stecker und Kabelanschlüsse) gemäß den angegebenen elektrischen Daten ausgewählt wurden und die nationalen und lokalen Bestimmungen erfüllen.*
- *Geräte, die beim Einschalten der Netzwerk-/Modbus-Gateways nicht angeschlossen oder mit Strom versorgt sind, werden nicht erkannt und müssen später konfiguriert werden.*
  - *Bevor Sie die Stromversorgung und die Netzwerk-/ Modbus-Gateways einschalten, müssen Sie sicher stellen, dass:*
    - ◆ *1. Alle anzuschließenden Kreisläufe sind korrekt verbunden.*
    - ◆ *2. Alle H-Link-Verbindungen wurden eingerichtet.*
    - ◆ *3. Der Modbus-Anschluss wurde korrekt ausgeführt.*
- *Die Signalkabel sollten so kurz wie möglich sein. Halten Sie einen Abstand von mehr als 150 mm zu anderen spannungsführenden Kabeln. Verlegen Sie sie nicht zusammen (sie können sich allerdings überkreuzen). Sollte es notwendig sein, sie gemeinsam zu verlegen, treffen Sie zur Vermeidung von Störungen folgende Maßnahmen:*
  - *Verwenden Sie für die Kommunikation abgeschirmte, an einer Seite geerdete Kabel.*

DEUTSCH

3.7 NETZWERK-KONFIGURATION

Im USB-Memory-Stick wird ein Computer-Software-Tool, “Net configuration Tool”, zur einfachen und benutzerfreundlichen Konfiguration mitgeliefert.

3.7.1 Computer-Anforderungen.

Die Verwendung eines PCs mir Microsoft Windows 7 oder höher, ein freier USB-Port und Java ist erforderlich.

3.7.2 Parameter der Konfiguration:

- *Parität: Ungerade/Gerade/Deaktiviert*
- *Kommunikationsgeschwindigkeit: 9600/19200 Bps*
- *Modbus-Adresse*
- *Modbus-TCP IP*

3.7.3 Konfigurationsverfahren

◆ Konfiguration über USB-Port

Diese Methode ist notwendig, wenn die Geräte-IP unbekannt ist.

1. Schließen Sie das Netzwerkgerät mit dem USB-Kabel an den Computer an (Feld geliefert oder zur Verfügung mit dem Netzkonfigurationsset)
2. Wählen Sie den Kommunikationsport des Computers.
3. Drücken Sie das Schaltfeld am Bildschirm

◆ Konfiguration über Ethernet-Port

1 Schließen Sie das Netzwerkgerät mit dem Ethernet-Kabel an den Computer an (Feld geliefert oder zur Verfügung mit dem Netzkonfigurationsset oder auch mit dem CSNET MANAGER)

2 Eingabe der folgenden Parameter:

- IP-Adresse: 192.168.0.4
- Port: Modbus Gateway/ HC-A64NET

3 Drücken Sie das Schaltfeld am Bildschirm

◆ Konfiguration des Geräts und Kommunikation

HC-A(8/16/64)MB

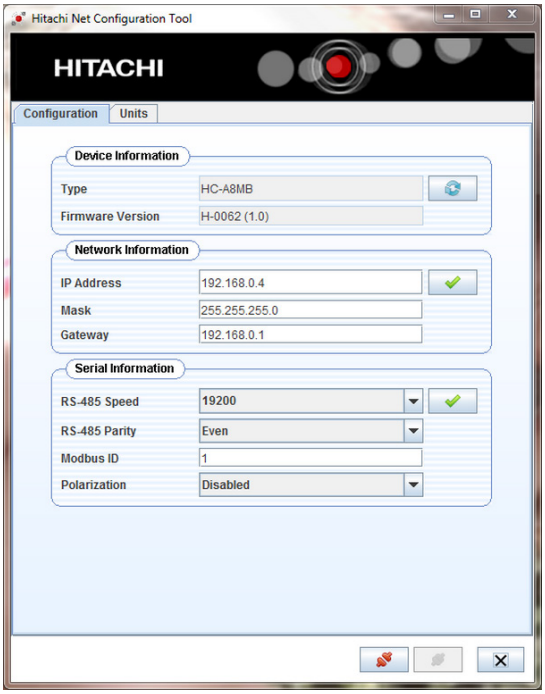

HC-A6NET

“Geräte-Information”

Prüfen Sie, dass das Netzwerkgerät korrekt in der “Geräte-Information”-Tabelle angezeigt wird. Drücken Sie -wenn notwendig- das Schaltfeld “Erneuern”.

“Netzwerk-Information”

Wenn das Netzwerkgerät über Ethernet in LAN/Modbus integriert ist, konfigurieren Sie folgende Parameter:

- IP-Adresse: Ermöglichen Sie die Modifizierung der IP des Netzwerkgeräte-Ports (standardmäßig “192.168.0.4).
- Maske: Fragen Sie Ihren IT-Techniker nach dem entsprechenden Wert. (standardmäßig “255.255.255.0”).
- Gateway: LAN-Gateway-Adresse (standardmäßig “192.168.0.1”).

Konfiguration der “Serien-Information”

Wenn das Netzwerkgerät über die serielle Schnittstelle RS485 in Modbus integriert ist, konfigurieren Sie folgende Parameter:

- RS485: 9600 / 19200 Bps (standardmäßig “19200” Bps)
- RS485: None/Ungerade/gerade Parität (standardmäßig “Gerade”)
- Modbus-ID: 1~128 (standardmäßig “1”)
- Polarisation: Kommunikations-Polarisation (standardmäßig “Deaktiviert”)

HINWEIS

Dieser Teil ist für HC-A64NET nicht verfügbar

“ID-Konfiguration der Geräte”

- Die automatische Adresse kann durch Drücken von durchgeführt werden
- Die manuelle Adressen-Konfiguration kann durch die Zuordnung von jeder ID zu einer spezifischen H-LINK-Adresse durchgeführt werden.
  - *Außengeräte-Adresse (Ou) und Innengeräte-Adresse (Iu)*

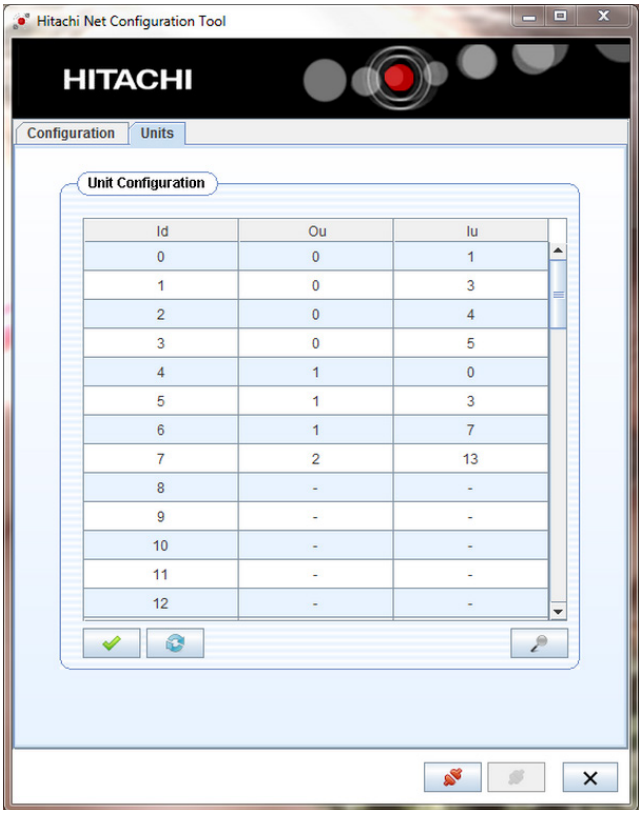

Id	Ou	Iu
0	0	1
1	0	3
2	0	4
3	0	5
4	1	0
5	1	3
6	1	7
7	2	13
8	-	-
9	-	-
10	-	-
11	-	-
12	-	-

- Bestätigen Sie die Konfiguration durch Drücken des
- Die Taste “Aktualisieren” muss gedrückt werden, wenn die am Netz angeschlossenen Geräte modifiziert werden

HINWEIS

Dieser Teil ist für HC-A64NET nicht verfügbar

4 KABELANSCHLUSS

Name	Anschluss	Technische Beschreibung der Kabel
X1	Stromversorgung (1)	Verwenden Sie 0,75 mm2-Kabel, die nicht leichter sind als die Polychloropren-Gummischlauchleitungen (Code-Bezeichnung 60245 IEC 57).
X3	Ethernet (1)	LAN-Kabel der Kategorie 5 oder höher PC-Anschluss: Verwenden Sie gekreuzte Kabel (1 Kabel-Set verfügbar im Netzkonfigurationsset) für den direkten Anschluss. LAN-Anschluss: Verwenden Sie ein direktes Kabel (nicht mitgeliefert) für die Verbindung zum kommerziellen Verteiler (Hub).
X4	H-LINK (1)	Abgeschirmtes Torsionskabel, 0,75 mm². Die Abschirmung darf nur an einer Kabelseite geerdet sein.
X5	RS485 (1)	3-adriger Kabelstrang 0,75 mm² nur an einer Kabelseite geerdet. Unterschiedliche Farben für jedes Kabel verwenden.
X6	USB (1)	USB Mini-B-Kabelstecker verwenden (1 Kabelset im Netzkonfigurationsset verfügbar)

HINWEIS

(1) Diese Kabel werden werkseitig nicht mitgeliefert.

4.1 DSW-KONFIGURATION

Name	Funktion	Werkseitige Einstellung	Beschreibung
SW1	Konfiguration		SW1-1: Modbus-Endwiderstand (*). SW1-2: Nicht verwendet (immer auf “ON” stellen)

HINWEIS

(*) Nicht anwendbar bei HC-A64NET.

5 BETRIEB

5.1 KOMPATIBILITÄT

Diese Geräte sind mit keiner der folgenden Hitachi-steuerungen kompatibel:

- *Zentralisierte Fernbedienungen*
- *Steuerungen zur Klimatisierung von Gebäuden (*)*
- *Andere Hitachi-BMS-Gateways (LONWORKS, BACNET, KNX, FIDELIO)*
- *Andere Hitachi-MODBUS-Gateways*
- *Andere Einheiten des gleichen Modells*

HINWEIS

(*) HC-A64NET ist mit dem CSNET Manager kompatibel.

5.2 INNENEINHEITEN

5.2.1 Verfügbare daten für HC-A(8/16/64)MB

Offset (1)	Name	Beschreibung	Werte	Lesen/Schreiben
0	EXIST	Existiert	0: Existiert nicht 1: Existiert	Lesen
1	SYSTEM_ADDRESS	Systemadresse	0~63	Lesen
2	UNIT_ ADDRESS	Geräteadresse		
3	SET_ONOFF	Ein/Aus-Einstellbefehl	0: Aus 1: Ein	Lesen/Schreiben
4	SET_MODE	Befehl Betriebsarteinstellung	0: Kühlen 1: Entfeuchten 2: Lüfter 3: Heizen 4: Auto	Lesen/Schreiben
5	SET_FAN	Befehl Lüftereinstellung	0: Niedrig 1: Medium 2: Hoch 3: High2 4: Auto	Lesen/Schreiben
6	SET_TSET	Temperatureinstellung	ºC (Stellen Sie es nach dem Arbeitsbereich der Einheit)	Lesen/Schreiben
7	SET_LOUVER	Luftklappen-einstellung	0 ~ 7 (7 ist Auto)	Lesen/Schreiben
8	SET_CENTRAL	Zentral-einstellung (3)	Bit 0: On/Off (kann jederzeit gestoppt werden) Bit 1: Modus Bit 2: Temperatur-einstellung Bit 3: Lüfter Bit 4: Luftklappe	Lesen/Schreiben
9	READ_ONOFF	On/Off-Status	0: Off 1: On	Lesen
10	READ_MODE	Statusmodus	0: Kühlen 1: Entfeuchten 2: Lüfter 3: Heizen 4: Auto	Lesen
11	READ_FAN	Lüfter-Status	0: Niedrig 1: Medium 2: Hoch 3: High2 4: Auto	Lesen
12	READ_TSET	Temperatur-einstellungsstatus	ºC (Stellen Sie es nach dem Arbeitsbereich der Einheit)	Lesen
13	READ_LOUVER	Luftklappe-Status	0 ~ 7 (7 ist Auto)	Lesen
14	(Nicht verwendet)	(Nicht verwendet)	(Nicht verwendet)	(Nicht verwendet)
15	TIN	Einlasstemperatur lesen (2)	-63ºC ~ 63ºC	Lesen
16	TOUT	Auslasstemperatur lesen (2)	-63ºC ~ 63ºC	Lesen
17	TGAS	Gasleitungstemperatur lesen (2)	-63ºC ~ 63ºC	Lesen
18	TLIQUID	Flüssigkeitsleitungstemperatur lesen (2)	-63ºC ~ 63ºC	Lesen
19	ERROR_CODE	Alarmcode	Geräte-Alarm von der 7-Segment-Anzeige	Lesen
20	STOP_CAUSE	Ursache Kompressor-stopp	(Lesen Sie das Wartungshandbuch des Geräts)	Lesen

Offset (1)	Name	Beschreibung	Werte	Lesen/Schreiben
21	VALVE_OPEN	Expansions-ventilöffnung des Innengeräts	0~100	(Nicht verwendet)
22	OPER_CONDITION	Gerätebetriebszustand	0: OFF 1: Thermo OFF 2: Thermo ON 3: Alarm	Lesen
23	(Nicht verwendet)	(Nicht verwendet)	(Nicht verwendet)	(Nicht verwendet)
24	AMBIENT TEMPERATURE	Umgebungstemperatur (2)	-63ºC ~ 63ºC	Lesen
25	RCS_TEM	Fernbedienungs-temperatur (nur wenn im Gerät verfügbar) (2)	-63ºC ~ 63ºC	Lesen
26	RCS_CONFIG	Fernbedienung Switch-Konfiguration	b0: 0 Haupteinheit / 1 Arbeitseinheit b1: 0 mit Fernbedienung / 1 ohne Fernbedienung	Lesen/Schreiben
27	RCS_GROUP	Fernbedienungsschalter Gruppe	0: Keine Gruppe 1~255	Lesen/Schreiben
28~30	(Nicht verwendet)	(Nicht verwendet)	(Nicht verwendet)	(Nicht verwendet)
31	REM_TEM	Fernbedienungs-Sensor-temperatur (2)	-63ºC ~ 63ºC	Lesen

HINWEIS

- *(1) Die Registrieradresse wird berechnet als: “N + (Adresse *32) + Offset” wenn:*
- *N: Die Datentabellenposition ist 2000, die Position 20000 ist ebenso verfügbar, um die Kompatibilität mit dem alten Modbus-Gateway aufrecht zu erhalten.*
- *Adresse: Innengeräteadresse wie von der Konfigurations-software konfiguriert.*
- *(2) Diese Nummern beziehen sich auf den angezeigten 16-Bit Wert, der das 2-Komplement-Format für negative Werte verwendet.*
- *(3) Bit 0 (An/Aus) und Bit 4 (Luftklappe) können nur gewählt werden, wenn alle Zentralen aktiviert sind.*
- *Um die Einstellung von der Fernbedienung aus zu sichern (Zentrale wird auf der Fernbedienung angezeigt), stellen Sie den Wert auf 31 ein.*

5.2.3 Verfügbare daten für HC-A(16/64)MB

Offset	Beschreibung	Werte	Lesen/Schreiben	Verfügbarkeit		
				VRF	RAC-	ATW
0	Existiert	0: No exist	Lesen	O	O	
		1: Exist				
1	Systemadresse	H-LINK 1: 0~15	Lesen	O	O	
2	Geräteadresse	H-LINK 2: 0~63		O	O	
3	Type	0: Indoor Unit	Lesen	O	O	
4	Ein/Aus-Einstellbefehl	0: Stop	Lesen/Schreiben	O	O	
		1: Run				
5	Befehl Betriebsarteinstellung	0: Cool	Lesen/Schreiben	O	O	
		1: Dry				
		2: Fan				
		3: Heat				
		4: Auto				
6	Befehl Lüftereinstellung	0: Low	Lesen/Schreiben	O	O	
		1: Medium				
		2: High				
		3: High2				
		4: Auto				
7	Einstelltemperatur	ºC (set according to the unit working range)	Lesen/Schreiben	O	O	
8	Temperature setting with 0.5°C intervals	ºC x 10 (19.5ºC read as 195)	Lesen/Schreiben	O		
9	Heating temperature setting for AUTO Cool/Heat	ºC	Lesen/Schreiben	O		
10	Heating Temperature setting for AUTO Cool/heat with 0.5°C intervals	ºC x 10 (19.5ºC read as 195)	Lesen/Schreiben	O		
11	Cooling Temperature setting for AUTO Cool/heat	ºC	Lesen/Schreiben	O		
12	Cooling Temperature setting for AUTO Cool/heat with 0.5°C intervals	ºC x 10 (19.5ºC read as 195)	Lesen/Schreiben	O		
13	Luftklappeneinstellung	0 ~ 7 (7 is Auto)	Lesen/Schreiben	O		
14	Central setting (2)	Bit 0: On/Off (always can be stopped)	Lesen/Schreiben	O	O	
		Bit 1: Mode				
		Bit 2: Setting Temp				
		Bit 3: Fan				
		Bit4: Louver				
15	On/Off-Status	0: Off	Lesen	O	O	
		1: On				
16	Statusmodus	0: Cool	Lesen	O	O	
		1: Dry				
		2: Fan				
		3: Heat				
		4: Auto				

DEUTSCH

Offset	Beschreibung	Werte	Lesen/Schreiben	Verfügbarkeit		
				VRF	RAC-	ATW
17	Lüfter-Status	0: Low 1: Medium 2: High 3: High2 4: Auto	Lesen	O	O	
18	Temperatureinstellungsstatus	ºC (set according to the unit working range)	Lesen	O	O	
19	Temperature setting with 0.5°C intervals status	ºC x10 (19.5ºC read as 195)	Lesen	O		
20	Heating temperature setting for AUTO Cool/Heat status	ºC	Lesen	O		
21	Heating Temperature setting for AUTO Cool/heat with 0.5°C intervals status	ºC x 10 (19.5ºC read as 195)	Lesen	O		
22	Cooling Temperature setting for AUTO Cool/heat status	ºC	Lesen	O		
23	Cooling Temperature setting for AUTO Cool/heat with 0.5°C intervals status	ºC x 10 (19.5ºC read as 195)	Lesen	O		
24	Luftklappe-Status	0 ~ 7 (7 is Auto)	Lesen	O		
25	Air inlet temperature reading	-63ºC ~ 63ºC	Lesen	O		
26	Air outlet temperature reading	-63ºC ~ 63ºC	Lesen	O		
27	Ablesen der Gasleitungstemperatur	-63ºC ~ 63ºC	Lesen	O		
28	Ablesen der Flüssigkeitsleitungstemperatur	-63ºC ~ 63ºC	Lesen	O		
29	Alarmcode	Geräte-Alarm von der 7-Segment-Anzeige	Lesen	O	O(1)	
30	Ursache Kompressorstopp	(Lesen Sie das Wartungshandbuch des Geräts)	Lesen	O		
31	Expansionsventilöffnung des Innengeräts	0~100	Lesen	O		
32	Gerätebetriebszustand	0: OFF 1: Thermo OFF 2: Thermo ON 3: Alarm	Lesen	O	O	
33	Remote temperature sensor (THM4) value	-63ºC ~ 63ºC	Lesen	O		
34	Remote control switch temperature (only when available in the unit)	-63ºC ~ 63ºC	Lesen	O	O	
35	Fernbedienungskonfiguration	b0: 0 Master/1Slave b1: 0 wih RCS/1 Without RCS	Lesen/Schreiben	O		
36	Fernbedienungsgruppe	0: No group 1~255	Lesen/Schreiben	O		

Offset	Beschreibung	Werte	Lesen/Schreiben	Verfügbarkeit		
				VRF	RAC-	ATW
37	CN3 Configuration status	b0: Input 1 open/close b1: Input 2 open/close b2: Enabled/Disabled (Indicates if the unit has CN3 enabled with any function)	Lesen	O		
38~49	Reserviert					
50	Steuergerät Start/Stopp	0: Stop 1: Run	Lesen/Schreiben			O
51	Steuergeräte-Modus	0: Cool 1: Heat	Lesen/Schreiben			O
52	Steuerkreis 1 Start/Stopp	0: Stop 1: Run	Lesen/Schreiben			O
53	Control Heat. OTC Zone 1	0: No 1: Points 2: Gradient 3: Fix	Lesen/Schreiben			O
54	Control Cool. OTC 1	0: No 1: Points 2: Fix	Lesen/Schreiben			O
55	Control Circuit 1: Water heating Fix Setting Temp	0~80	Lesen/Schreiben			O
56	Control Circuit 1: Water cooling Fix Setting Temp	0~80	Lesen/Schreiben			O
57	Steuerkreis 1: ECO-Modus	0: ECO 1: Comfort	Lesen/Schreiben			O
58	Steuerkreis 1: Heizen ECO Ausgleichstemperatur	1~10	Lesen/Schreiben			O
59	Control Circuit 1: Cool ECO Offset Temperature	1~10	Lesen/Schreiben			O
60	Control Circuit 1: External MBS/KNX Thermostat Available	0: Not Available 1: Available	Lesen/Schreiben			O
61	Control Zone 1: Thermostat Setting	0~65535	Lesen/Schreiben			O
62	Control Zone 1: Room Ambient Temperature	-32667~32667	Lesen/Schreiben			O
63	Control Circuit 2 Run/Stop	0: Stop 1: Run	Lesen/Schreiben			O
64	Control Heat. OTC Zone 2	0: No 1: Points 2: Gradient 3: Fix	Lesen/Schreiben			O
65	Control Cool. OTC Zone 2	0: No 1: Points 2: Fix	Lesen/Schreiben			O
66	Control Circuit 2: Water heating Fix Setting Temp	0~80	Lesen/Schreiben			O

Offset	Beschreibung	Werte	Lesen/Schreiben	Verfügbarkeit		
				VRF	RAC-	ATW
67	Control Circuit 2: Water cooling Fix Setting Temp	0~80	Lesen/Schreiben			O
68	Control Circuit 2: Eco mode	0: ECO 1: Comfort	Lesen/Schreiben			O
69	Control Circuit 2: Heat ECO Offset Temperature	1~10	Lesen/Schreiben			O
70	Control Circuit 2: Cool ECO Offset Temperature	1~10	Lesen/Schreiben			O
71	Control Circuit 2: External MBS/KNX Thermostat Available	0: Not Available 1: Available	Lesen/Schreiben			O
72	Control Zone 2: Thermostat Setting	0~65535	Lesen/Schreiben			O
73	Control Zone 2: Room Ambient Temperature	-32667~32667	Lesen/Schreiben			O
74	Wärmewasserspeichersteuerung Start/Stopp	0: Stop 1: Run	Lesen/Schreiben			O
75	Wärmewasserspeichersteuerung Einstelltemperatur	0~80	Lesen/Schreiben			O
76	Steuerung TWE-Verstärkung	0: No request 1: Request	Lesen/Schreiben			O
77	Reserviert					
78	Steuerung TWE-Bedarfsmodus	0: Standard 1: High demand	Lesen/Schreiben			O
79	Steuerung Schwimmbad Start/Stopp	0: Stop 1: Run	Lesen/Schreiben			O
80	Steuerung Schwimmbad Einstelltemperatur	0~80	Lesen/Schreiben			O
81	Steuerung Anti-Legionellen An/Aus	0: Stop 1: Run	Lesen/Schreiben			O
82	Steuerung Anti-Legionellen Einstelltemperatur	0~80	Lesen/Schreiben			O
83	Steuerung Blockierung/Freigabe Menü	0: No 1: Block (user cannot access the menu)	Lesen/Schreiben			O
84	Control Yutaki Forced OFF	0: Normal Operation 1: Forced OFF	Lesen/Schreiben			O
85	Space Heating Heater Forced OFF	0: Normal Operation 1: Heater Forced OFF	Lesen/Schreiben			O
86	Steuerung Fehler/Alarm	0: No 1: Alarm	Lesen/Schreiben			O
87~99	Reserviert					
100	Status Einheit Start/Stopp	0: Stop 1: Run	Lesen			O
101	Status Mode	B0: 0: Cool / 1: Heat B1: 0: Normal / 1: Auto	Lesen			O
102	Status Kreis 1 Start/Stopp	0: Stop 1: Run	Lesen			O

Offset	Beschreibung	Werte	Lesen/Schreiben	Verfügbarkeit		
				VRF	RAC-	ATW
103	Status Heat. OTC 1	0: No 1: Points 2: Gradient 3: Fix	Lesen			O
104	Status Cool. OTC 1	0: No 1: Points 2: Fix	Lesen			O
105	Status Circuit 1: Water heating Fix Setting Temp	0~80	Lesen			O
106	Status Circuit 1: Water cooling Fix Setting Temp	0~80	Lesen			O
107	Status Kreislauf 1: ECO-Betriebsart	0: ECO 1: Comfort	Lesen			O
108	Status Kreislauf 1: Heizen ECO Ausgleichstemperatur	1~10	Lesen			O
109	Status Circuit 1: Cool ECO Offset Temperature	1~10	Lesen			O
110	Status Kreislauf 1: Thermostat-Einstelltemperatur	50~350 (5,0~35,0)	Lesen			O
111	Status Circuit 1: Thermostat Room Temperature	0~1000 (0,0~100,0)	Lesen			O
112	Status Kreislauf 1: Drahtlos Einstelltemperatur	50~350 (5,0~35,0)	Lesen			O
113	Status Kreislauf 1: Drahtlos Raumtemperatur	0~1000 (0,0~100,0)	Lesen			O
114	Status Circuit 2 Run/Stop	0: Stop 1: Run	Lesen			O
115	Status Modus OTC 2 Heizung	0: No 1: Points 2: Gradient 3: Fix	Lesen			O
116	Status Modus OTC 2 Kühlung	0: No 1: Points 2: Fix	Lesen			O
117	Status Circuit 2: Water heating Fix Setting Temp	0~80	Lesen			O
118	Status Circuit 2: Water cooling Fix Setting Temp	0~80	Lesen			O
119	Status Circuit 2: Eco mode	0: ECO 1: Comfort	Lesen			O
120	Status Kreislauf 1: Heizen ECO Ausgleichstemperatur	1~10	Lesen			O
121	Status Circuit 1: Cool ECO Offset Temperature	1~10	Lesen			O
122	Status Zone 2: Thermostat Setting	50~350 (5,0~35,0)	Lesen			O
123	Status Zone 2: Ambient Temperature	0~1000 (0,0~100,0)	Lesen			O

Offset	Beschreibung	Werte	Lesen/Schreiben	Verfügbarkeit		
				VRF	RAC-	ATW
124	Status Circuit 2: Wireless Setting Temperature	50~350 (5,0~35,0)	Lesen			O
125	Status Circuit 2: Wireless Room temperature	0~1000 (0,0~100,0)	Lesen			O
126	Wärmewasserspeicherstatus Start/ Stopp	0: Stop 1: Run	Lesen			O
127	Wärmewasserspeicherstatus Einstelltemperatur	0~80	Lesen			O
128	Status DHW Boost	0: Disable 1: Enable	Lesen			O
129	Reserviert					
130	Status TWE-Bedarfsmodus	0: Standard 1: High demand	Lesen			O
131	Status DHW Temperature	-80~100	Lesen			O
132	Status Schwimmbad An/Aus	0: Stop 1: Run	Lesen			O
133	Status Swim. Pool Setting Temperature	0~80	Lesen			O
134	Status Swim. Pool Temperature	-80~100	Lesen			O
135	Status AntiLeg. Start/Stopp	0: Stop 1: Run	Lesen			O
136	Status Anti-Legionellen Einstelltemperatur	0~80	Lesen			O
137	Status Blockierung/Freigabe Menü	0: No 1: Block	Lesen			O
138	Status Fehler/Alarm	0: No 1: Alarm	Lesen			O
139	LCD Zentralmodus	0: Local 1: Air (Not available for Yutampo) 2:Water (Not available for Yutampo) 3: Full	Lesen			O

DEUTSCH

Offset	Beschreibung	Werte	Lesen/Schreiben	Verfügbarkeit		
				VRF	RAC-	ATW
140	Systemkonfiguration	b0: Zone 1 Heating Available	Lesen			O
		b1: Zone 2 Heating Available				
		b2: Zone 1 Cooling Available				
		b3: Zone 2 Cooling Available				
		b4: DHWT Available				
		b5: SWP Available				
		b6: Room thermostat available Zone 1				
		b7: Room thermostat available Zone 2				
		b8: Wireless Setting C1				
		b9: Wireless Setting C2				
		b10: Wireless Room Temperature C1				
		b11: Wireless Room Temperature C2				
		b12: Slave Unit				
141	Betriebsstatus	0: OFF	Lesen			O
		1: Cool Demand –OFF				
		2: Cool Thermo-OFF				
		3: Cool Thermo-ON				
		4: Heat Demand-OFF				
		5: Heat Thermo-OFF				
		6: Heat Thermo-ON				
		7: DHW-OFF				
		8: DHW-ON				
		9: SWP-OFF				
		10: SWP-ON				
		11: Alarm				
142	Außenluft-T° (Outdoor ambient temperature)	-80~100	Lesen			O
143	Wassereinlass-T° (Water Inlet unit temperature)	-80~100	Lesen			O
144	Wasserauslass-T° (Water outlet unit temperature)	-80~100	Lesen			O
145	H-Link Communication State	0: No alarm	Lesen			O
		1: There is no communication with RCS or Yutaki unit during more than 180 seconds				
		2: Data initialization				
146	PCB-Software		Lesen			O

Offset	Beschreibung	Werte	Lesen/Schreiben	Verfügbarkeit		
				VRF	RAC-	ATW
147	LCD-Software		Lesen			O
148	Geräteleistung		Lesen			O
149	Unit Power Consumption		Lesen			O
150	Water Outler HP (TwoHP)	0~100 Nur für YUTAKI S & S Combi	Lesen			O
151	Ta1av: Outdoor Unit Ambient Average Temperature	-80~100	Lesen			O
152	Ta2: Second Ambient Temperature (inst)	-80~100	Lesen			O
153	Ta2av: Second Ambient Temperature (avg)	-80~100				O
154	O2: Water outlet Temp 2 (Two2)	-80~100	Lesen			O
155	O3: Water outlet Temp 3 (Two3)	-80~100	Lesen			O
156	Tg: Gas Temperature (THMg)	-80~100	Lesen			O
157	Tl: Liquid Temperature (THMl)	-80~100	Lesen			O
158	EVI: Indoor expansion valve openning	0~100	Lesen			O
159	CD: Capacity Data		Lesen			O
160	Mixing Valve Opening	0~100	Lesen			O
161	Entfrosten	0: No defrosting	Lesen			O
		1: Defrosting				
162	Gerätemodell	0: Yutaki S	Lesen			O
		1: Yutaki SC				
		2: Yutaki S80				
		3: Yutaki M				
		4: Yutaki SC Lite (New)				
		5: Yutampo (New)				
		6: YCC (New)				
163	Th: Water Temp Setting (Ttwo)	-80~100	Lesen			O
164	Wasserdurchfluss	Water Flow [0.1m3/h]	Lesen			O
165	Pump Speed	0~100	Lesen			O
166	Systemstatus 2	Bit 0: Defrost	Lesen			O
		Bit 1: Solar				
		Bit 2: Water Pump 1				
		Bit 3: Water Pump 2				
		Bit 4: Water Pump 3				
		Bit 5: Compressor ON				
		Bit 6: Boiler ON				
		Bit 7: DHW Heater				
		Bit 8: Space Heater				
		Bit 9: Smart function input enabled				
		Bit10: Forced OFF				
		Bit11: DHW recirculation Pump State				
		Bit12: Solar Pump Output State				

Offset	Beschreibung	Werte	Lesen/Schreiben	Verfügbarkeit		
				VRF	RAC-	ATW
167	Alarmnummer	0: Alarm XXX: Alarm number	Lesen			O
168	R134a Abgastemperatur		Lesen			O
169	R134a Ansaugtemperatur		Lesen			O
170	R134a Ausströmdruck		Lesen			O
171	R134a Ansaugdruck		Lesen			O
172	R134a Kompressorfrequenz		Lesen			O
173	R134a Innen-Expansionsventilöffnung		Lesen			O
174	R134a Wert des Kompressorstroms		Lesen			O
175	R134a Wiederholungscode		Lesen			O
176	R134 Te SH		Lesen			O
177	R134 Secondary Current		Lesen			O
178	R134 Stop Code		Lesen			O
179~ 189	Reserviert					
190	YCC - Enabled Units	0~8	Lesen			O
191	YCC - Working Units	0~8	Lesen			O
192	YCC - Required Units	0~8	Lesen			O

NOTE

- *Register address is calculated as: 5000+(Modbus_Id*200)+offset*
- *Modbus_Id as configured by configuration software*
- *For VRF / Package units, only the relevant data are available (heating units registers will not give any value). The situation is the same for heating units (registers related to air/air units will not give any value).*
- *Availability:*
  - PAC: VRF and package units.
  - RAC: Domestic units connected to the H-link via PSC-6RAD or SPX-RAMHLK
  - ATW: Air to water units.
- *(1) Take into account only if it is different from zero.*
- *(2) Bit 0 (ON/OFF) and Bit 4 (Louver) selectable only when all centrals are actived.*
- *In order to full lock setting from RCS (Central shown in RCS) set this register to 31*

5.3 AUSSENGERÄTE

Some state registers about outdoor unit have been added. Using these registers it is now possible to know the status of the refrigerant cycle. Some control registers have also been added.

Offset	Beschreibung	Werte	Lesen/Schreiben
0	Außenlufttemperatur	-63ºC ~ 63ºC	Lesen
1	Compressor Discharge Temperature	0 ~ 200 ºC	Lesen
2	Heating Evaporating Temperature		Lesen
3	Number of operating Compressor		Lesen
4	Ausströmdruck	0.0 ~ 5.0 MPa (0.1 MPa)	Lesen
5	Ansaugdruck	-0.2 ~2.0MPa (0.1 MPa or 0.01MPa depending unit)	Lesen
6	Total Current	0 ~ 255 A	Lesen
7	Total Real Frequency	0 ~ 255 Hz	Lesen
8	EVO1	0 ~ 100 %	Lesen
9	EVO2 / Hot Bypass	0 ~ 100 %	Lesen
10	EVB	0 ~ 100 %	Lesen
11	Outdoor Unit Option Enabled	0: Disable	Lesen/Schreiben
		1: Enable (it's possible to use the following options, also if the value of register 16 "Power Level Set" is 1)	
12	Noise Control Enabled	0: Disable	Lesen/Schreiben
		1: Enable (it's possible to send the noise level)	
13	Noise Control Level Set	0~9 (See the service manual of Outdoor unit, function db)	Lesen/Schreiben
14	Power Control Enabled	0: Disable	Lesen/Schreiben
		1: Enable (it's possible to send the power level)	
15	Power Level	0~100%	Lesen/Schreiben
16	Power Level Set	0~100%	Lesen
17	Power Level Current Value	0~100%	Lesen
18	Power Control Possible	0: Not possible	Lesen
		1: Possible	

NOTE

- *Register address is calculated as: 5000+(Modbus_Id*200)+offset*
- *Modbus_Id as configured by configuration software*

5.4 OPTIONALE FUNKTIONEN

Some optional functions of the indoor units have been added so that they can be managed from the BMS.

Offset	Beschreibung	Werte	Lesen/Schreiben
0	b1 (Heating temperature compensation)	0~4	Lesen/Schreiben
1	b2 (Circulation function at heating Thermo-OFF)	0~1	Lesen/Schreiben
2	b4 (Change of filter cleaning period)	0~4	Lesen/Schreiben
3	c5 (Static pressure selection)	0~2	Lesen/Schreiben
4	c8 (Control by the temperature sensor of the remote control switch)	0~2	Lesen/Schreiben
5	Cb (Selection of forced stoppage logic)	0~1	Lesen/Schreiben
6	Cd (Stop of indoor unit fan during cooling Thermo-OFF conditions)	0~1	Lesen/Schreiben
7	CE (Stop of indoor unit fan during heating Thermo-OFF conditions)	0~1	Lesen/Schreiben
8	d1 (Management of indoor unit operation after a power supply cut off -option 1)	0~1	Lesen/Schreiben
9	d3 (Management of indoor unit operation after a power supply cut off -option 2)	0~1	Lesen/Schreiben
10	d4 (RPI(M) Prevention of low air outlet temperature in cooling mode)	0~1	Lesen/Schreiben
11	d5 (Prevention of low air outlet temperature in heating mode)	0~1	Lesen/Schreiben
12	E1 (KPI: Ventilation mode / Econofresh cooling mode)	0~2	Lesen/Schreiben
13	E2 (KPI: Increase of air supply volume / Econofresh enthalpy Sensor)	0~1	Lesen/Schreiben
14	E4 (KPI: Pre-cooling / preheating period / Econofresh: CO2 sensor)	0~2	Lesen/Schreiben
15	E8 (Control for stop of the indoor unit fan during heating Thermo-OFF conditions (with remote sensor THM-R2AE connected to the THM4 connector in the indoor unit PCB)	0~1	Lesen/Schreiben
16	E9 (Intermittent fan operation in heating stop)	0~1	Lesen/Schreiben
17	Eb (Indoor unit fan control during cooling Thermo-OFF conditions)	0~2	Lesen/Schreiben
18	EE (Control in “Automatic” indoor fan speed mode)	0~1	Lesen/Schreiben
19	EF (Control in “Automatic” indoor fan speed mode (supporting High H))	0~1	Lesen/Schreiben
20	H4 (KPI: Operation modes for the ventilation unit with energy recovery)	0~1	Lesen/Schreiben
21	K5 (Detection level of the motion sensor kit)	0~2	Lesen/Schreiben
22	K6 (Selection of allowed operation modes when the control sensor of the indoor unit is set by C8 function)	0~3	Lesen/Schreiben

NOTE

- *Register address is calculated as: 40000+(Modbus_Id*100)+offset*
- *Modbus_Id as configured by configuration software*

5.5 ALARMCODE-LISTE

Die Adresse 19 zeigt den Alarmcode an, wie er im Innengerät angezeigt wird Siehe das Wartungshandbuch zu der Alarmbeschreibung und Reparaturverfahren bei einem Innengeräte- oder Außengerätealarm.

5.6 FEHLERBEHEBUNG

ALARMCODE	BESCHREIBUNG	GEGENMASSNAHME
LED2 flackert	Anormaler Betrieb	Schalten Sie die Stromversorgung des Geräts ab und stellen Sie sie nach 5 s wieder her. Wenn LED2 noch immer flackert, setzen Sie sich mit dem Hitachi-Kundendienst in Verbindung.

6 NETZKONFIGURATIONSSET

Dieses Zubehör bietet alle notwendigen Kabel für Hitachi-Installateure, wenn eine Modbus-Installation in Betrieb genommen wird.

Teileliste:

USB-Kabel		Gekreuztes Ethernet-Kabel		USB-Pen-Drive-Memory	
1x		1x		1x	

Die USB-Pen-Drive-Memory enthält ein Software-Tool für die Prüfung der Modbus-Kommunikation bei der Inbetriebnahme.

Das USB-Kabel ist nur notwendig, wenn das Gerät konfiguriert wird (Netzwerkparameter)

Das Ethernet-Kabel dient zum Schnellanschluss mit einem Laptop für die Prüfung der Modbus-Kommunikation.

1 GUIDE DU PRODUIT

1.1 NOMENCLATURE DES UNITÉS

Commande du contrôleur d'interface				
	Tiret de séparation			
		Compatible H-LINK II		
			Nombre maximum d'unités contrôlables (8/16/64)	
				MB : gateway Modbus NET : gateway pour CSNET Manager
HC	-	A	X	X

1.2 MODÈLES

DESCRIPTION
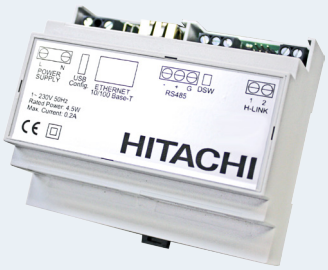
HC-A8MB
HC-A16MB
HC-A64MB
HC-A64NET

1.3 LISTE D'ACCESSOIRES

DESCRIPTION
Kit de configuration réseau

FRANÇAIS

2 CARACTÉRISTIQUES GÉNÉRALES DE NOUVEAU PRODUIT

2.3.1 Spécifications du matériel

Élément	Spécifications
Source d'alimentation	1~ 230 V ±10 % 50 Hz
Consommation	4,5W (maximum)
Dimensions extérieures	Largeur : 106 mm, Profondeur : 90 mm, Hauteur : 58 mm
Poids	165 g
Conditions d'assemblage	Intérieur (installation dans un coffret nécessitant un outil d'accès spécifique)
Température ambiante	0~60 ºC
Humidité	20~85 % (sans condensation)

2.3.2 Communication

◆ RS485

Élément	Spécifications
Type	Modbus RTU pour HC-A(8/16/64)MB
	Non disponible pour HC-A64NET
Connecteur	Port série RS485 (bornier 3 vis)
Ligne de communication	Câble blindé à paire torsadée, avec troisième câble (pour la commune), avec polarité.
Système de communication	Connexion en série multipoints et semi-duplex
Méthode de communication	Pas de parité ou sélection de parité paire/impaire. Longueur de données : 8 bits - 1 bit d'arrêt
Transmission débit en bauds	19 200 / 9 600 bauds
Longueur	Max. 1 200 m conformément à EIA-485

◆ Ethernet

Élément	Spécifications
Type	Modbus TCP pour HC-A(8/16/64)MB
	Communication TCP/IP pour HC-A64NET
Connecteur	Ethernet (RJ45)
Ligne de communication	Deux câbles à paire torsadée CAT5 ou supérieurs (T-568A/T-568B)
Système de communication	Duplex complet
Longueur	max. 100 m conformément à IEEE 802.3

◆ H-LINK

Élément	Spécifications
Communication avec	HC-A(16/64)MB: systèmes FREE SET, UTOPIA, CENTRIFUGAL et HEATING HC-A8MB et HC-A64NET: systèmes SET FREE, UTOPIA et CENTRIFUGAL
Ligne de communication	Câble blindé à paire torsadée, sans polarité
Système de communication	Semi-duplex
Méthode de communication	Asynchrone
Vitesse de transmission	9 600 bauds
Longueur du câblage	1 000 m maximum (longueur totale du bus H-LINK I/E)
Nombre maximum de gateways	1 gateway (HC-A(8/16/64)MB)/SYSTÈME H-LINK
Nombre maximum d'UI	HC-A64MB → jusqu'à 64 * unités intérieures
	HC-A16MB → jusqu'à 16 * unités intérieures
	HC-A8MB → jusqu'à 8 * unités intérieures
	HC-A64NET → jusqu'à 64 * unités intérieures

3 INSTALLATION

3.1 CONSIGNES DE SÉCURITÉ

DANGER

- ***Veuillez lire ce manuel soigneusement avant de réaliser les travaux d'installation.***
- ***N'installez pas ce système dans des endroits accessibles au grand public. Installez-le dans des coffrets électriques, uniquement accessibles à l'aide d'un outil et protégez-le contre de potentielles perturbations électromagnétiques.***
- ***Ne connectez pas la source d'alimentation avant d'avoir correctement terminé l'installation. Déconnectez toujours la source d'alimentation du dispositif avant les travaux de maintenance ou d'entretien.***

ATTENTION

- *Cet équipement ne peut être utilisé que par des personnes adultes et compétentes ayant reçu des informations ou une instruction technique pour manipuler l'équipement de façon correcte et sûre.*
- *C'est un produit de catégorie A. Dans un environnement domestique, ce produit peut provoquer des interférences radio auquel cas l'utilisateur devra prendre les mesures appropriées.*
- *Les enfants doivent être surveillés pour s'assurer qu'ils ne jouent pas avec l'appareil.*
- *Assurez-vous que les composants électriques fournis sur site (interrupteurs d'alimentation principale, disjoncteurs, câbles, connecteurs de câbles et bornes) ont été correctement choisis en fonction des spécifications électriques indiquées dans ce document et qu'ils sont conformes aux normes nationales et locales. Si nécessaire, contactez les autorités locales pour connaître les normes, règles et réglementations en vigueur.*
- *N'installez pas de gateways Réseau / Modbus dans des lieux :*
  - *où de la vapeur, de l'huile ou d'autres liquides répandus pourraient affecter le dispositif.*
  - *où ont été détectées une accumulation, une génération ou des fuites de gaz inflammables.*
  - *près de sources de chaleur ou de bruits électromagnétiques.*
  - *près de la mer, dans des milieux salins, acides ou alcalins.*

FRANÇAIS

3.2 COMPOSANTS FOURNIS

Dispositif de gateway		Manuel d'utilisation		Clé USB	
1x	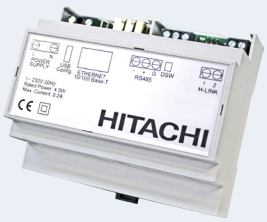	1x		1x	

3.3 DIMENSIONS

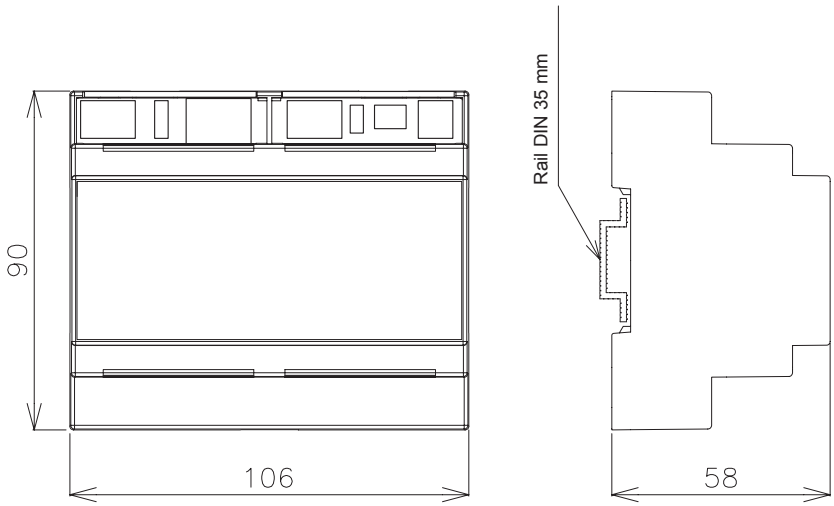

3.4 DESCRIPTION DES ÉLÉMENTS

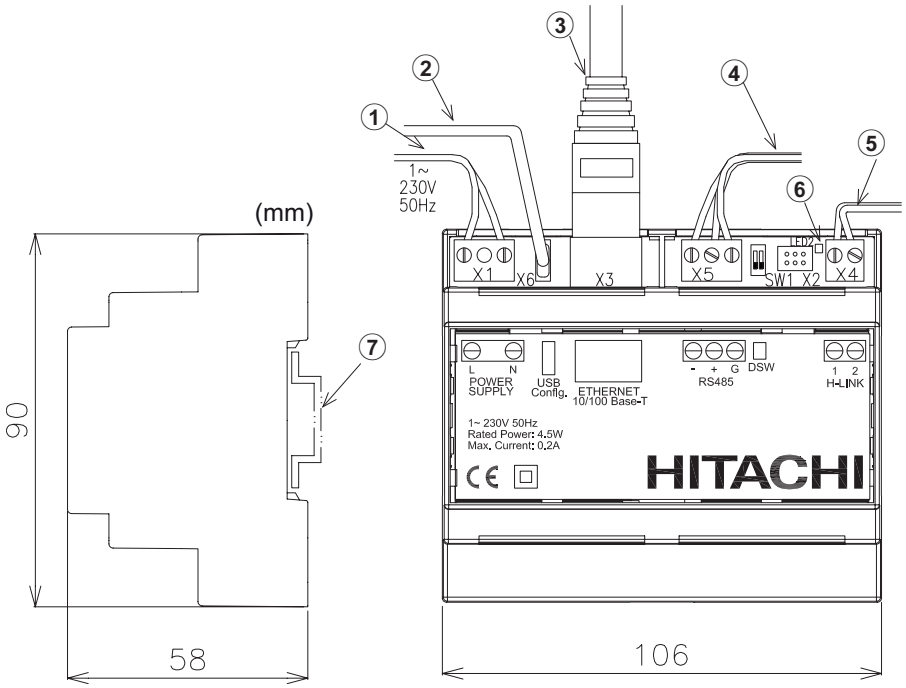

Nº	Description
①	Source d'alimentation externe
②	Câble USB au moment de la configuration uniquement
③	Ethernet RJ45 HC-A(8/16/64)MB: Modbus TCP HC-A64NET : TCP/IP
④	RS485 Modbus RTU pour HC-A(8/16/64)MB Non disponible pour HC-A64NET
⑤	Bus de communication H-LINK avec unités Hitachi
⑥	LED d'indication de fonctionnement
⑦	Rail DIN 35 mm pour montage dans coffret électrique

3.5 ESPACE D'INSTALLATION

Maintenez la zone grise libre pour le bon fonctionnement du dispositif.

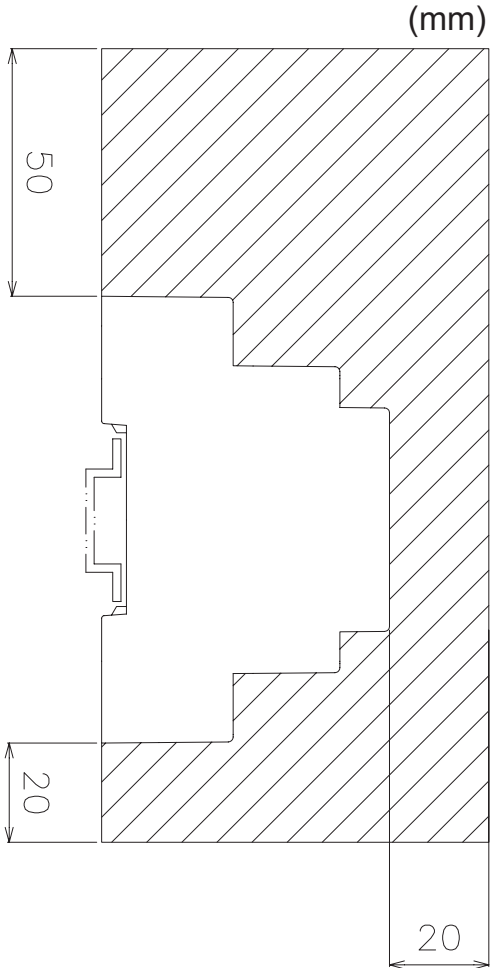

3.6 PROCÉDURE D'INSTALLATION

⚠ DANGER

- ***N'installez pas ce dispositif dans des endroits accessibles au grand public. Installez-le dans un coffret ou un lieu uniquement accessible à l'aide d'un outil.***
- ***Ne connectez pas la source d'alimentation avant d'avoir correctement terminé l'installation. Déconnectez toujours la source d'alimentation du dispositif avant les travaux de maintenance ou d'entretien.***

⚠ ATTENTION

- *Assurez-vous que les composants électriques fournis sur site (interrupteurs d'alimentation principale, disjoncteurs, câbles, connecteurs de câbles et bornes) ont été correctement choisis en fonction des spécifications électriques indiquées dans ce document et qu'ils sont conformes aux normes nationales et locales.*
- *Toute unité non connectée ou non alimentée au moment du démarrage des gateways Réseau / Modbus ne sera pas reconnue et devra être configurée ultérieurement.*
  - *Avant d'activer la source d'alimentation et d'allumer les gateways Réseau / Modbus , vous devez vous assurer que :*
    - *1. Tous les circuits à connecter ont été appliqués correctement.*
    - *2. Toutes les connexions H-Link ont été configurées.*
    - *3. La connexion Modbus est bien réalisée.*
- *Les câbles des signaux doivent être aussi courts que possible. Maintenez-les éloignés d'autres câbles d'alimentation d'au moins 150 mm. Ne les attachez pas ensemble (mais vous pouvez les croiser). S'il est nécessaire de les installer ensemble, adoptez les mesures suivantes pour éviter les bruits électriques :*
  - *Pour les communications, utilisez du câble blindé dont une extrémité est reliée à la terre.*

FRANÇAIS

3.7 CONFIGURATION RÉSEAU

"Net configuration Tool", un logiciel-outil informatique est fourni à l'intérieur de la clé USB pour une configuration simple et agréable.

3.7.1 Configuration de l'ordinateur

Il est requis d'utiliser un ordinateur personnel avec Microsoft Windows 7 ou supérieur, un port USB libre et Java.

3.7.2 Paramètres sous configuration :

- *Parité : impair/pair/désactivé*
- *Vitesse de communication : 9 600 / 19 200 Bps*
- *Adresse Modbus*
- *Modbus TCP IP*

3.7.3 Procédure de configuration

◆ Configuration via port USB

Cette méthode est requise quand le dispositif IP est inconnu.

1. Connectez le dispositif de réseau à un ordinateur via un câble USB (fourni sur site ou disponible avec le kit de configuration réseau)
2. Sélectionnez le port de communication de l'ordinateur.
3. Appuyez sur le bouton à l'écran

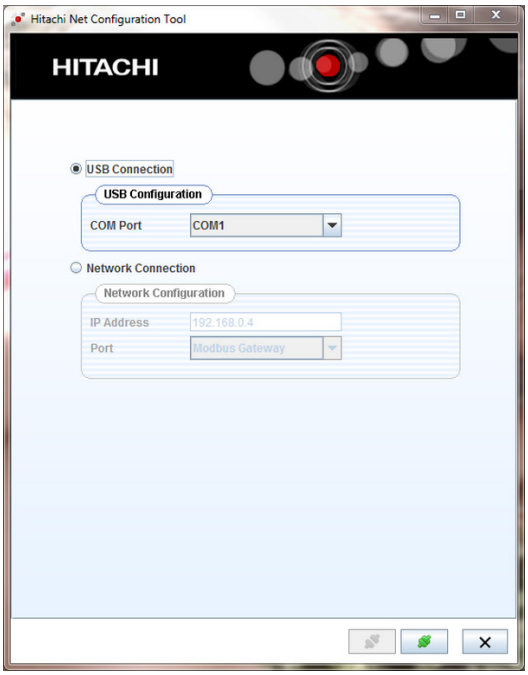

◆ Configuration via port Ethernet

1 Connectez le dispositif de réseau à un ordinateur via un câble Ethernet (fourni sur site ou disponible avec le kit de configuration réseau ou avec le CSNET MANAGER)

2 Saisissez les paramètres suivants :

- Adresse IP : 192.168.0.4
- Port : Modbus Gateway/ HC-A64NET

3 Appuyez sur le bouton à l'écran

◆ Configuration du dispositif et de la communication

HC-A(8/16/64)MB

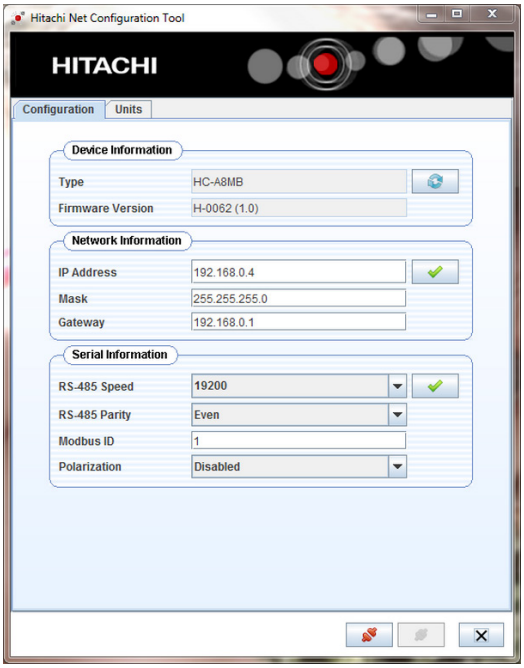

HC-A64NET

« Informations de dispositif »

Vérifiez que le dispositif de réseau est bien affiché dans le tableau des « Informations de dispositif ». Appuyez sur le bouton de mise à jour si nécessaire.

« Informations de réseau »

- Quand le dispositif de réseau est intégré à la LAN / au Modbus via Ethernet, configurez les paramètres suivants :
- Adresse IP : permettez de modifier l'IP du port du dispositif de réseau («192.168.0.4» par défaut).
- Masque : Demandez à votre technicien informatique la valeur adéquate («255.255.255.0» par défaut).
- Gateway : adresse gateway LAN («192.168.0.1» par défaut).

« Informations de série »

Quand le dispositif de réseau est intégré au Modbus via le port de série RS485, configurez les paramètres suivants :

- RS485 : 9 600 / 19 200 Bps (« 19 200 » par défaut)
- RS485 : parité none / impair / pair (« pair » par défaut)
- ID Modbus : 1~128 (« 1 » par défaut)
- Polarisation : polarisation de communication (« Désactivée » par défaut)

REMARQUE

Cette option n'est pas disponible pour HC-A64NET

« Configuration d'ID d'unité »

- L'adresse automatique peut être réglée en appuyant sur
- La configuration d'adresse manuelle peut se faire via l'assignation de chaque ID à une adresse H-LINK spécifique
  - *Adresse de groupe extérieur (Ou) et adresse d'unité intérieure (Iu)*

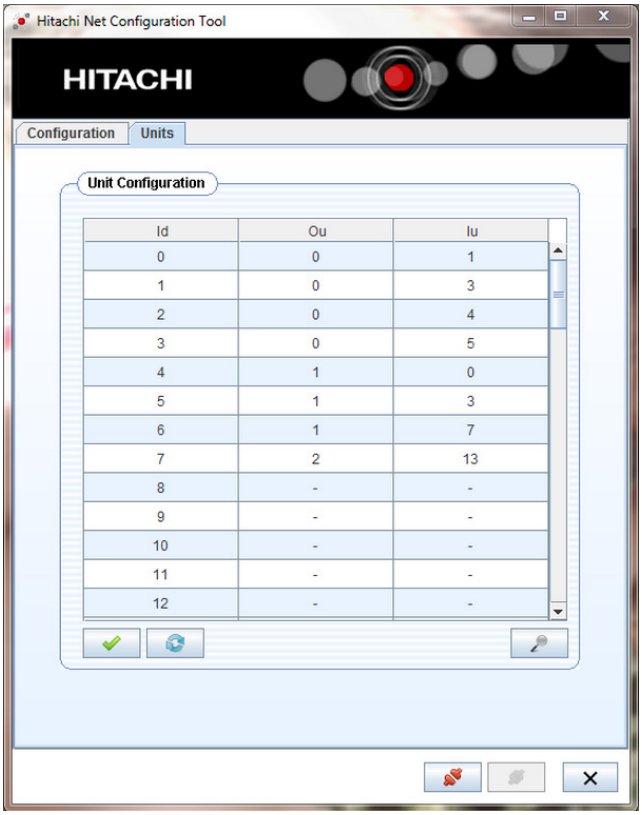

Id	Ou	Iu
0	0	1
1	0	3
2	0	4
3	0	5
4	1	0
5	1	3
6	1	7
7	2	13
8	-	-
9	-	-
10	-	-
11	-	-
12	-	-

- Confirmez la configuration en appuyant sur
- Il faut appuyer sur le bouton de mise à jour pour modifier les unités connectés au réseau

REMARQUE

Cette option n'est pas disponible pour HC-A64NET

FRANÇAIS

4 CÂBLAGE ÉLECTRIQUE

Nom	Connexion	Spécifications du câble
X1	Source d'alimentation (1)	Utilisez des câbles de 0,75 mm2 qui ne sont pas plus légers que le câble souple gainé de polychloroprène (code de désignation 60245 IEC 57).
X3	Ethernet (1)	Câbles LAN de catégorie 5 ou supérieure Connexion au PC : Utilisez un câble croisé (1 ensemble de câble disponible avec le kit de configuration réseau) pour connexion directe. Connexion LAN : utilisez un câble direct (fourni) pour la connexion à un distributeur commercial (Hub).
X4	H-LINK (1)	Câble blindé à paire torsadée de 0,75 mm². Le câble blindé doit être connecté à la terre d'un seul côté.
X5	RS485 (1)	Collier câble à 3 fils 0,75 mm² connecté à la terre d'un seul côté. Utilisez une couleur différente pour chaque câble.
X6	USB (1)	Câble USB Mini-B (1 ensemble de câble disponible avec le kit de configuration réseau).

REMARQUE

(1) Ces câbles doivent être fournis sur site.

4.1 CONFIGURATION DSW

Nom	Fonction	Réglage d'usine	Description
SW1	Configuration		SW1-1 : résistance terminale Modbus (*). SW1-2 : non utilisé (toujours sur « ON »)

REMARQUE

(*) Non applicable pour HC-A64NET.

5 FONCTIONNEMENT

5.1 COMPATIBILITÉ

Ces dispositifs ne sont compatibles avec aucun des contrôleurs Hitachi ci-dessous :

- *Télécommandes centralisés*
- *Contrôles de conditionnement d'air de bâtiment (*1)*
- *Autres gateways BMS Hitachi (LONWORKS, BACNET, KNX, FIDELIO)*
- *Autres gateways MODBUS Hitachi*
- *Autres unités du même modèle*

REMARQUE

(*) HC-A64NET est compatible avec CSNET Manager.

5.2 UNITÉS INTÉRIEURES

5.2.1 Données disponibles pour HC-A(8/16/64)MB

Offset (1)	Nom	Description	Valeurs	Lecture/Écriture
0	EXIST	Existe	0 : n'existe pas 1 : existe	Lecture
1	SYSTEM_ADDRESS	Adresse du système	0~63	Lecture
2	UNIT_ADDRESS	Adresse de l'unité		
3	SET_ONOFF	Réglage marche/arrêt	0 : arrêt 1 : marche	Lecture/Écriture
4	SET_MODE	Réglage des modes	0 : froid 1 : déshumidification 2 : ventilateur 3 : chaud 4 : Auto	Lecture/Écriture
5	SET_FAN	Réglage du ventilateur	0 : basse 1 : moyen 2 : rapide 3 : high2 4 : auto	Lecture/Écriture
6	SET_TSET	Température de consigne	ºC (Réglez selon la plage de fonctionnement de l'unité)	Lecture/Écriture
7	SET_LOUVER	Réglage du déflecteur	0 à 7 (7 correspond à Auto)	Lecture/Écriture
8	SET_CENTRAL	Réglage centralisé (3)	Bit 0 : On/Off (peut être arrêté à tout moment) Bit 1 : mode Bit 2 : réglage temp. Bit 3 : ventilateur Bit 4 : Déflecteur	Lecture/Écriture
9	READ_ONOFF	État On/Off	0 : Off 1: On	Lecture
10	READ_MODE	État du mode	0 : froid 1 : déshumidification 2 : ventilateur 3 : chaud 4 : Auto	Lecture
11	READ_FAN	État du ventilateur	0 : basse 1 : moyen 2 : rapide 3 : high2 4 : Auto	Lecture
12	READ_TSET	État de réglage de température	ºC (Réglez selon la plage de fonctionnement de l'unité)	Lecture
13	READ_LOUVER	État du déflecteur	0 à 7 (7 correspond à Auto)	Lecture
14	(Non utilisé)	(Non utilisé)	(Non utilisé)	(Non utilisé)
15	TIN	Lecture de température d'admission (2)	-63ºC ~ 63ºC	Lecture
16	TOUT	Lecture de température de sortie (2)	-63ºC ~ 63ºC	Lecture
17	TGAS	Lecture de température de conduite de gaz (2)	-63ºC ~ 63ºC	Lecture
18	TLIQUID	Lecture de temp. de tuyau de liquide (2)	-63ºC ~ 63ºC	Lecture
19	ERROR_CODE	Code d'alarme	Alarme de l'unité à 7 segments	Lecture
20	STOP_CAUSE	Cause de l'arrêt du compresseur	(Lire le manuel de maintenance de l'unité)	Lecture
21	VALVE_OPEN	Ouverture de la soupape de sécurité de l'unité intérieure	0~100	(Non utilisé)

FRANÇAIS

Offset (1)	Nom	Description	Valeurs	Lecture/Écriture
22	OPER_CONDITION	Conditions de fonctionnement de l'unité	0 : OFF 1 : Thermo-OFF 2 : Thermo-ON 3 : Alarme	Lecture
23	(Non utilisé)	(Non utilisé)	(Non utilisé)	(Non utilisé)
24	AMBIENT TEMPERATURE	Température ambiante (2)	-63ºC ~ 63ºC	Lecture
25	RCS_TEM	Télécommande change la temp. (uniquement quand disponible sur l'unité) (2)	-63ºC ~ 63ºC	Lecture
26	RCS_CONFIG	La configuration du commutateur de commande à distance	b0 : 0 maître / 1 esclave b1 : 0 avec télécommande/ 1 sans télécommande	Lecture/Écriture
27	RCS_GROUP	Groupe de commutateurs de commande à distance	0 : pas de groupe 1~255	Lecture/Écriture
28~30	(Non utilisé)	(Non utilisé)	(Non utilisé)	(Non utilisé)
31	REM_TEM	Température de sonde (2)	-63ºC ~ 63ºC	Lecture

REMARQUE

- *(1) L'adresse d'enregistrement est calculée selon : « N + (Adresse * 32) + Offset » où :*
- *N : la position du tableau de données est 2000, la position 20000 est également disponible pour maintenir la compatibilité avec l'ancien gateway Modbus.*
- *Adresse : l'adresse de l'unité intérieure configurée par le logiciel de configuration.*
- *(2) Ces numéros font référence à la valeur 16-bits soussignée en utilisant le format 2 compléments pour des valeurs négatives.*
- *(3) Bit 0 (ON/OFF) et Bit 4 (déflecteur) ne peuvent être sélectionnés que lorsque toutes les centrales sont activées.*
- *Pour le réglage de verrouillage complet de la télécommande (central affiché sur la télécommande), réglez ce registre sur 31.*

5.2.2 Données disponibles pour HC-A(16/64)MB

Offset	Description	Valeurs	Lecture/Écriture	Disponibilité		
				VRF	RAC	ATW
0	Existe	0: No exist	Lecture	O	O	
		1: Exist				
1	Adresse du système	H-LINK 1: 0~15	Lecture	O	O	
2	Adresse de l'unité	H-LINK 2: 0~63		O	O	
3	Type	0: Indoor Unit	Lecture	O	O	
4	Réglage marche/arrêt	0: Stop	Lecture/Écriture	O	O	
		1: Run				
5	Réglage des modes	0: Cool	Lecture/Écriture	O	O	
		1: Dry				
		2: Fan				
		3: Heat				
		4: Auto				
6	Réglage du ventilateur	0: Low	Lecture/Écriture	O	O	
		1: Medium				
		2: High				
		3: High2				
		4: Auto				
7	Température de consigne	ºC (set according to the unit working range)	Lecture/Écriture	O	O	
8	Temperature setting with 0.5°C intervals	ºC x 10 (19.5ºC read as 195)	Lecture/Écriture	O		
9	Heating temperature setting for AUTO Cool/Heat	°C	Lecture/Écriture	O		
10	Heating Temperature setting for AUTO Cool/heat with 0.5°C intervals	ºC x 10 (19.5ºC read as 195)	Lecture/Écriture	O		
11	Cooling Temperature setting for AUTO Cool/heat	°C	Lecture/Écriture	O		
12	Cooling Temperature setting for AUTO Cool/heat with 0.5°C intervals	ºC x 10 (19.5ºC read as 195)	Lecture/Écriture	O		
13	Réglage du volet d'air	0 ~ 7 (7 is Auto)	Lecture/Écriture	O		
14	Central setting (2)	Bit 0: On/Off (always can be stopped)	Lecture/Écriture	O	O	
		Bit 1: Mode				
		Bit 2: Setting Temp				
		Bit 3: Fan				
		Bit4: Louver				
15	État Marche/Arrêt	0: Off	Lecture	O	O	
		1: On				
16	État du mode	0: Cool	Lecture	O	O	
		1: Dry				
		2: Fan				
		3: Heat				
		4: Auto				

FRANÇAIS

Offset	Description	Valeurs	Lecture/Écriture	Disponibilité		
				VRF	RAC	ATW
17	État du ventilateur	0: Low 1: Medium 2: High 3: High2 4: Auto	Lecture	O	O	
18	État de la température de consigne	ºC (set according to the unit working range)	Lecture	O	O	
19	Temperature setting with 0.5°C intervals status	ºC x10 (19.5ºC read as 195)	Lecture	O		
20	Heating temperature setting for AUTO Cool/Heat status	°C	Lecture	O		
21	Heating Temperature setting for AUTO Cool/heat with 0.5°C intervals status	ºC x 10 (19.5ºC read as 195)	Lecture	O		
22	Cooling Temperature setting for AUTO Cool/heat status	°C	Lecture	O		
23	Cooling Temperature setting for AUTO Cool/heat with 0.5°C intervals status	ºC x 10 (19.5ºC read as 195)	Lecture	O		
24	État du volet d'air	0 ~ 7 (7 is Auto)	Lecture	O		
25	Air inlet temperature reading	-63 °C à 63 °C	Lecture	O		
26	Air outlet temperature reading	-63 °C à 63 °C	Lecture	O		
27	Lecture de la température des conduites de gaz	-63 °C à 63 °C	Lecture	O		
28	Lecture de la température des tuyaux de liquide	-63 °C à 63 °C	Lecture	O		
29	Code d'alarme	Alarme de l'unité sur l'afficheur à 7 segments	Lecture	O	O(1)	
30	Cause de l'arrêt du compresseur	(Lire le manuel de maintenance de l'unité)	Lecture	O		
31	Ouverture de la soupape de sécurité de l'unité intérieure	0~100	Lecture	O		
32	Conditions de fonctionnement de l'unité	0: OFF 1: Thermo OFF 2: Thermo ON 3: Alarm	Lecture	O	O	
33	Remote temperature sensor (THM4) value	-63 °C à 63 °C	Lecture	O		
34	Remote control switch temperature (only when available in the unit)	-63 °C à 63 °C	Lecture	O	O	
35	Configuration de la télécommande	b0: 0 Master/1Slave b1: 0 wih RCS/1 Without RCS	Lecture/Écriture	O		
36	Groupe de télécommande	0: No group 1~255	Lecture/Écriture	O		

Offset	Description	Valeurs	Lecture/Écriture	Disponibilité		
				VRF	RAC	ATW
37	CN3 Configuration status	b0: Input 1 open/close b1: Input 2 open/close b2: Enabled/Disabled (Indicates if the unit has CN3 enabled with any function)	Lecture	O		
38~49	Réservées					
50	Contrôle d'unité Marche/Arrêt	0: Stop 1: Run	Lecture/Écriture			O
51	Contrôle d'unité de mode	0: Cool 1: Heat	Lecture/Écriture			O
52	Contrôle circuit 1 Marche/Arrêt	0: Stop 1: Run	Lecture/Écriture			O
53	Control Heat. OTC Zone 1	0: No 1: Points 2: Gradient 3: Fix	Lecture/Écriture			O
54	Control Cool. OTC 1	0: No 1: Points 2: Fix	Lecture/Écriture			O
55	Control Circuit 1: Water heating Fix Setting Temp	0~80	Lecture/Écriture			O
56	Control Circuit 1: Water cooling Fix Setting Temp	0~80	Lecture/Écriture			O
57	Contrôle de circuit 1 : mode ECO	0: ECO 1: Comfort	Lecture/Écriture			O
58	Contrôle de circuit 1 : température de compensation ECO de chauffage	1~10	Lecture/Écriture			O
59	Control Circuit 1: Cool ECO Offset Temperature	1~10	Lecture/Écriture			O
60	Control Circuit 1: External MBS/KNX Thermostat Available	0: Not Available 1: Available	Lecture/Écriture			O
61	Control Zone 1: Thermostat Setting	0~65535	Lecture/Écriture			O
62	Control Zone 1: Room Ambient Temperature	-32667~32667	Lecture/Écriture			O
63	Control Circuit 2 Run/Stop	0: Stop 1: Run	Lecture/Écriture			O
64	Control Heat. OTC Zone 2	0: No 1: Points 2: Gradient 3: Fix	Lecture/Écriture			O
65	Control Cool. OTC Zone 2	0: No 1: Points 2: Fix	Lecture/Écriture			O
66	Control Circuit 2: Water heating Fix Setting Temp	0~80	Lecture/Écriture			O

FRANÇAIS

Offset	Description	Valeurs	Lecture/Écriture	Disponibilité		
				VRF	RAC	ATW
67	Control Circuit 2: Water cooling Fix Setting Temp	0~80	Lecture/Écriture			O
68	Control Circuit 2: Eco mode	0: ECO 1: Comfort	Lecture/Écriture			O
69	Control Circuit 2: Heat ECO Offset Temperature	1~10	Lecture/Écriture			O
70	Control Circuit 2: Cool ECO Offset Temperature	1~10	Lecture/Écriture			O
71	Control Circuit 2: External MBS/KNX Thermostat Available	0: Not Available 1: Available	Lecture/Écriture			O
72	Control Zone 2: Thermostat Setting	0~65535	Lecture/Écriture			O
73	Control Zone 2: Room Ambient Temperature	-32667~32667	Lecture/Écriture			O
74	Contrôle ballon ECS Marche/Arrêt	0: Stop 1: Run	Lecture/Écriture			O
75	Contrôle température consigne ballon ECS	0~80	Lecture/Écriture			O
76	Contrôle de l'augmentation d'ECS	0: No request 1: Request	Lecture/Écriture			O
77	Réservées					
78	Contrôle mode de demande d'ECS	0: Standard 1: High demand	Lecture/Écriture			O
79	Contrôle piscine Marche/Arrêt	0: Stop 1: Run	Lecture/Écriture			O
80	Contrôle température consigne piscine	0~80	Lecture/Écriture			O
81	Contrôle anti-légionelles Marche/Arrêt	0: Stop 1: Run	Lecture/Écriture			O
82	Contrôle température consigne anti-légionelles	0~80	Lecture/Écriture			O
83	Contrôle blocage/déblocage menu	0: No 1: Block (user cannot access the menu)	Lecture/Écriture			O
84	Control Yutaki Forced OFF	0: Normal Operation 1: Forced OFF	Lecture/Écriture			O
85	Space Heating Heater Forced OFF	0: Normal Operation 1: Heater Forced OFF	Lecture/Écriture			O
86	Contrôle erreur/alarme	0: No 1: Alarm	Lecture/Écriture			O
87~99	Réservées					
100	État de l'unité Marche/Arrêt	0: Stop 1: Run	Lecture			O
101	Status Mode	B0: 0: Cool / 1: Heat B1: 0: Normal / 1: Auto	Lecture			O
102	État circuit 1 Marche/Arrêt	0: Stop 1: Run	Lecture			O

Offset	Description	Valeurs	Lecture/Écriture	Disponibilité		
				VRF	RAC	ATW
103	Status Heat. OTC 1	0: No 1: Points 2: Gradient 3: Fix	Lecture			O
104	Status Cool. OTC 1	0: No 1: Points 2: Fix	Lecture			O
105	Status Circuit 1: Water heating Fix Setting Temp	0~80	Lecture			O
106	Status Circuit 1: Water cooling Fix Setting Temp	0~80	Lecture			O
107	État circuit 1 : mode ECO	0: ECO 1: Comfort	Lecture			O
108	État circuit 1 : température de compensation ECO de chauffage	1~10	Lecture			O
109	Status Circuit 1: Cool ECO Offset Temperature	1~10	Lecture			O
110	État circuit 1 : thermostat de la température de réglage	50~350 (5,0~35,0)	Lecture			O
111	État circuit 1 : thermostat de la température de la pièce	0~1000 (0,0~100,0)	Lecture			O
112	État circuit 1 : température de réglage sans fil	50~350 (5,0~35,0)	Lecture			O
113	État circuit 1 : température de la pièce sans fil	0~1000 (0,0~100,0)	Lecture			O
114	Status Circuit 2 Run/Stop	0: Stop 1: Run	Lecture			O
115	État mode OTC 2 chauffage	0: No 1: Points 2: Gradient 3: Fix	Lecture			O
116	État mode OTC 2 refroidissement	0: No 1: Points 2: Fix	Lecture			O
117	Status Circuit 2: Water heating Fix Setting Temp	0~80	Lecture			O
118	Status Circuit 2: Water cooling Fix Setting Temp	0~80	Lecture			O
119	Status Circuit 2: Eco mode	0: ECO 1: Comfort	Lecture			O
120	État circuit 1 : température de compensation ECO de chauffage	1~10	Lecture			O
121	Status Circuit 1: Cool ECO Offset Temperature	1~10	Lecture			O
122	Status Zone 2: Thermostat Setting	50~350 (5,0~35,0)	Lecture			O
123	Status Zone 2: Ambient Temperature	0~1000 (0,0~100,0)	Lecture			O

Offset	Description	Valeurs	Lecture/Écriture	Disponibilité		
				VRF	RAC	ATW
124	Status Circuit 2: Wireless Setting Temperature	50~350 (5,0~35,0)	Lecture			O
125	Status Circuit 2: Wireless Room temperature	0~1000 (0,0~100,0)	Lecture			O
126	État ballon ECS Marche/Arrêt	0: Stop 1: Run	Lecture			O
127	État température consigne ballon ECS	0~80	Lecture			O
128	Status DHW Boost	0: Disable 1: Enable	Lecture			O
129	Réservées					
130	État mode de demande d'ECS	0: Standard 1: High demand	Lecture			O
131	Status DHW Temperature	-80~100	Lecture			O
132	État piscine Marche/Arrêt	0: Stop 1: Run	Lecture			O
133	Status Swim. Pool Setting Temperature	0~80	Lecture			O
134	Status Swim. Pool Temperature	-80~100	Lecture			O
135	Status AntiLeg. Marche/arrêt	0: Stop 1: Run	Lecture			O
136	État température consigne anti-légionelles	0~80	Lecture			O
137	État blocage/déblocage menu	0: No 1: Block	Lecture			O
138	État erreur/alarme	0: No 1: Alarm	Lecture			O
139	LCD mode central	0: Local 1: Air (Not available for Yutampo) 2:Water (Not available for Yutampo) 3: Full	Lecture			O

Offset	Description	Valeurs	Lecture/Écriture	Disponibilité		
				VRF	RAC	ATW
140	Configuration système	b0: Zone 1 Heating Available	Lecture			O
		b1: Zone 2 Heating Available				
		b2: Zone 1 Cooling Available				
		b3: Zone 2 Cooling Available				
		b4: DHWT Available				
		b5: SWP Available				
		b6: Room thermostat available Zone 1				
		b7: Room thermostat available Zone 2				
		b8: Wireless Setting C1				
		b9: Wireless Setting C2				
		b10: Wireless Room Temperature C1				
		b11: Wireless Room Temperature C2				
		b12: Slave Unit				
141	État opérationnel	0: OFF	Lecture			O
		1: Cool Demand –OFF				
		2: Cool Thermo-OFF				
		3: Cool Thermo-ON				
		4: Heat Demand-OFF				
		5: Heat Thermo-OFF				
		6: Heat Thermo-ON				
		7: DHW-OFF				
		8: DHW-ON				
		9: SWP-OFF				
		10: SWP-ON				
		11: Alarm				
142	Tº extérieure ambiante (Outdoor ambient temperature)	-80~100	Lecture			O
143	Tº d'arrivée de l'eau (Water Inlet unit temperature)	-80~100	Lecture			O
144	Tº de sortie de l'eau (Water outlet unit temperature)	-80~100	Lecture			O
145	H-Link Communication State	0: No alarm	Lecture			O
		1: There is no communication with RCS or Yutaki unit during more than 180 seconds				
		2: Data initialization				
146	Logiciel de la PCB		Lecture			O

FRANÇAIS

Offset	Description	Valeurs	Lecture/Écriture	Disponibilité		
				VRF	RAC	ATW
147	Logiciel de LCD		Lecture			O
148	Puissance de l'unité		Lecture			O
149	Unit Power Consumption		Lecture			O
150	Water Outler HP (TwoHP)	0~100 uniquement pour YUTAKI S et S Combi	Lecture			O
151	Ta1av: Outdoor Unit Ambient Average Temperature	-80~100	Lecture			O
152	Ta2: Second Ambient Temperature (inst)	-80~100	Lecture			O
153	Ta2av: Second Ambient Temperature (avg)	-80~100				O
154	O2: Water outlet Temp 2 (Two2)	-80~100	Lecture			O
155	O3: Water outlet Temp 3 (Two3)	-80~100	Lecture			O
156	Tg : température du gaz (THMg)	-80~100	Lecture			O
157	Tl: Liquid Temperature (THMl)	-80~100	Lecture			O
158	EVI: Indoor expansion valve openning	0~100	Lecture			O
159	CD: Capacity Data		Lecture			O
160	Mixing Valve Opening	0~100	Lecture			O
161	Dégivrage	0: No defrosting	Lecture			O
		1: Defrosting				
162	Modèle d'unité	0: Yutaki S	Lecture			O
		1: Yutaki SC				
		2: Yutaki S80				
		3: Yutaki M				
		4: Yutaki SC Lite (New)				
		5: Yutampo (New)				
		6: YCC (New)				
163	Th: Water Temp Setting (Ttwo)	-80~100	Lecture			O
164	Débit d'eau	Water Flow [0.1m3/h]	Lecture			O
165	Pump Speed	0~100	Lecture			O
166	État du système 2	Bit 0: Defrost	Lecture			O
		Bit 1: Solar				
		Bit 2: Water Pump 1				
		Bit 3: Water Pump 2				
		Bit 4: Water Pump 3				
		Bit 5: Compressor ON				
		Bit 6: Boiler ON				
		Bit 7: DHW Heater				
		Bit 8: Space Heater				
		Bit 9: Smart function input enabled				
		Bit10: Forced OFF				
		Bit11: DHW recirculation Pump State				
		Bit12: Solar Pump Output State				

Offset	Description	Valeurs	Lecture/Écriture	Disponibilité		
				VRF	RAC	ATW
167	Numéro d'alarme	0: Alarm XXX: Alarm number	Lecture			O
168	Température de refoulement R134a		Lecture			O
169	Température d'aspiration R134a		Lecture			O
170	Pression de refoulement R134a		Lecture			O
171	Pression d'aspiration R134a		Lecture			O
172	Fréquence de compresseur R134a		Lecture			O
173	Ouverture de la soupape de sécurité intérieur R134a		Lecture			O
174	Valeur actuelle du compresseur R134a		Lecture			O
175	Code de nouvel essai R134a		Lecture			O
176	R134 Te SH		Lecture			O
177	R134 Secondary Current		Lecture			O
178	R134 Stop Code		Lecture			O
179~ 189	Réservées					
190	YCC - Enabled Units	0~8	Lecture			O
191	YCC - Working Units	0~8	Lecture			O
192	YCC - Required Units	0~8	Lecture			O

NOTE

- *Register address is calculated as: 5000+(Modbus_Id*200)+offset*
- *Modbus_Id as configured by configuration software*
- *For VRF / Package units, only the relevant data are available (heating units registers will not give any value). The situation is the same for heating units (registers related to air/air units will not give any value).*
- *Availability:*
  - PAC: VRF and package units.
  - RAC: Domestic units connected to the H-link via PSC-6RAD or SPX-RAMHLK
  - ATW: Air to water units.
- *(1) Take into account only if it is different from zero.*
- *(2) Bit 0 (ON/OFF) and Bit 4 (Louver) selectable only when all centrals are actived.*
- *In order to full lock setting from RCS (Central shown in RCS) set this register to 31*

FRANÇAIS

5.2.3 Unités extérieures

Some state registers about outdoor unit have been added. Using these registers it is now possible to know the status of the refrigerant cycle. Some control registers have also been added.

Offset	Description	Valeurs	Lecture/Écriture
0	Température de l'air extérieur	-63 °C à 63 °C	Lecture
1	Compressor Discharge Temperature	0 ~ 200 ºC	Lecture
2	Heating Evaporating Temperature		Lecture
3	Number of operating Compressor		Lecture
4	Pression de refoulement	0.0 ~ 5.0 MPa (0.1 MPa)	Lecture
5	Pression d'aspiration	-0.2 ~2.0MPa (0.1 MPa or 0.01MPa depending unit)	Lecture
6	Total Current	0 ~ 255 A	Lecture
7	Total Real Frequency	0 ~ 255 Hz	Lecture
8	EVO1	0 ~ 100 %	Lecture
9	EVO2 / Hot Bypass	0 ~ 100 %	Lecture
10	EVB	0 ~ 100 %	Lecture
11	Outdoor Unit Option Enabled	0: Disable	Lecture/Écriture
		1: Enable (it's possible to use the following options, also if the value of register 16 "Power Level Set" is 1)	
12	Noise Control Enabled	0: Disable	Lecture/Écriture
		1: Enable (it's possible to send the noise level)	
13	Noise Control Level Set	0~9 (See the service manual of Outdoor unit, function db)	Lecture/Écriture
14	Power Control Enabled	0: Disable	Lecture/Écriture
		1: Enable (it's possible to send the power level)	
15	Power Level	0~100%	Lecture/Écriture
16	Power Level Set	0~100%	Lecture
17	Power Level Current Value	0~100%	Lecture
18	Power Control Possible	0: Not possible	Lecture
		1: Possible	

NOTE

- *Register address is calculated as: 5000+(Modbus_Id*200)+offset*
- *Modbus_Id as configured by configuration software*

5.2.4 Fonctions optionnelles

Some optional functions of the indoor units have been added so that they can be managed from the BMS.

Offset	Description	Valeurs	Lecture/Écriture
0	b1 (Heating temperature compensation)	0~4	Lecture/Écriture
1	b2 (Circulation function at heating Thermo-OFF)	0~1	Lecture/Écriture
2	b4 (Change of filter cleaning period)	0~4	Lecture/Écriture
3	c5 (Static pressure selection)	0~2	Lecture/Écriture
4	c8 (Control by the temperature sensor of the remote control switch)	0~2	Lecture/Écriture
5	Cb (Selection of forced stoppage logic)	0~1	Lecture/Écriture
6	Cd (Stop of indoor unit fan during cooling Thermo-OFF conditions)	0~1	Lecture/Écriture
7	CE (Stop of indoor unit fan during heating Thermo-OFF conditions)	0~1	Lecture/Écriture
8	d1 (Management of indoor unit operation after a power supply cut off -option 1)	0~1	Lecture/Écriture
9	d3 (Management of indoor unit operation after a power supply cut off -option 2)	0~1	Lecture/Écriture
10	d4 (RPI(M) Prevention of low air outlet temperature in cooling mode)	0~1	Lecture/Écriture
11	d5 (Prevention of low air outlet temperature in heating mode)	0~1	Lecture/Écriture
12	E1 (KPI: Ventilation mode / Econofresh cooling mode)	0~2	Lecture/Écriture
13	E2 (KPI: Increase of air supply volume / Econofresh enthalpy Sensor)	0~1	Lecture/Écriture
14	E4 (KPI: Pre-cooling / preheating period / Econofresh: CO2 sensor)	0~2	Lecture/Écriture
15	E8 (Control for stop of the indoor unit fan during heating Thermo-OFF conditions (with remote sensor THM-R2AE connected to the THM4 connector in the indoor unit PCB)	0~1	Lecture/Écriture
16	E9 (Intermittent fan operation in heating stop)	0~1	Lecture/Écriture
17	Eb (Indoor unit fan control during cooling Thermo-OFF conditions)	0~2	Lecture/Écriture
18	EE (Control in “Automatic” indoor fan speed mode)	0~1	Lecture/Écriture
19	EF (Control in “Automatic” indoor fan speed mode (supporting High H))	0~1	Lecture/Écriture
20	H4 (KPI: Operation modes for the ventilation unit with energy recovery)	0~1	Lecture/Écriture
21	K5 (Detection level of the motion sensor kit)	0~2	Lecture/Écriture
22	K6 (Selection of allowed operation modes when the control sensor of the indoor unit is set by C8 function)	0~3	Lecture/Écriture

NOTE

- *Register address is calculated as: 40000+(Modbus_Id*100)+offset*
- *Modbus_Id as configured by configuration software*

5.3 LISTE DES CODES D'ALARME

L'adresse 19 indique le code d'alarme comme il apparaît sur l'unité intérieure. Consultez le manuel de maintenance pour des explications sur l'alarme et la procédure de réparation en cas d'alarme d'unité intérieure ou de groupe extérieur.

5.4 DÉPANNAGE

CODE D'ALARME	DESCRIPTION	CONTRE-MESURE
La LED2 clignote	Fonctionnement anormal	Éteignez la source d'alimentation du dispositif et rétablissez-la après 5 s. Si la LED2 continue de clignoter, contactez le service clientèle d'Hitachi

6 KIT DE CONFIGURATION RÉSEAU

Cet accessoire fournit tous les câbles nécessaires pour les installateurs d'Hitachi lors de la mise en service d'une installation Modbus.

Liste des composants :

Câble USB		Câble Ethernet croisé		Clé USB	
1x		1x		1x	

La clé USB comprend un logiciel-outil pour la vérification de la communication Modbus au moment de la mise en service.

Le câble USB n'est requis que pour la configuration du dispositif (paramètres de réseau)

Le câble Ethernet est fourni pour une connexion rapide avec un ordinateur portable pour la vérification de la communication Modbus.

1 GUIDA DEI PRODOTTI

1.1 NOMENCLATURA DELLE UNITÀ

Controllo del dispositivo di controllo di interfaccia	Trattino	Compatibile con H-LINK II	Numero massimo di unità controllabili (8/16/64)	MB: Gateway modbus NET: Gateway gestore CSNET
HC	-	A	X	X

1.2 MODELLI

DESCRIZIONE
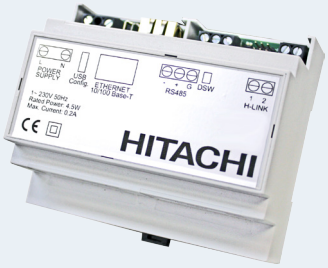
HC-A8MB
HC-A16MB
HC-A64MB
HC-A64NET

1.3 ELENCO DEGLI ACCESSORI

DESCRIZIONE
Kit configurazione rete

ITALIANO

2 SPECIFICHE GENERALI DEL NUOVO PRODOTTO

2.3.1 Specifiche dell'Hardware

Elemento	Specifiche
Alimentazione	1~ 230 V ±10% 50 Hz
Consumo	4,5W (massimo)
Dimensioni esterne	Larghezza: 106 mm, Profondità: 90 mm, Altezza: 58 mm
Peso	165 g
Condizioni di montaggio	Interne (installazione all'interno di un contenitore con accesso tramite uno strumento)
Temperatura ambiente	0~60 ºC
Umidità	20~85% (Senza condensazione)

2.3.2 Comunicazione

◆ RS485

Elemento	Specifiche
Tipo	Modbus RTU per HC-A(8/16/64)MB
	Non disponibile per HC-A64NET
Connettore	Porta seriale RS485 (morsetti a 3 viti)
Linea di comunicazione	Cavo doppino ritorto schermato, con terzo cavo (per il comune), con polarità.
Sistema di comunicazione	Collegamento seriale multipunto semi-duplex
Metodo di comunicazione	Selezione di non parità o parità dispari/pari. Lunghezza dati: 8 bit - 1 stop bit
Velocità di trasmissione in Baud	19200/9600 Baud
Lunghezza	Max. 1200 m in conformità a EIA-485

◆ Ethernet

Elemento	Specifiche
Tipo	Modbus TCP per HC-A(8/16/64)MB
	Comunicazione TCP/IP per HC-A64NET
Connettore	Ethernet (RJ45)
Linea di comunicazione	Due doppini ritorti CAT5 o superiore (T-568A/T-568B)
Sistema di comunicazione	Full-duplex
Lunghezza	Max. 100 m in conformità a IEEE 802.3

◆ H-LINK

Elemento	Specifiche
Comunicazione con	HC-A(16/64)MB: SET FREE, UTOPIA, CENTRIFUGAL e sistemi di RISCALDAMENTO HC-A8MB e HC-A64NET: SET FREE, UTOPIA e CENTRIFUGAL
Linea di comunicazione	Doppino ritorto schermato, senza polarità
Sistema di comunicazione	Semiduplex
Metodo di comunicazione	Asincrono
Velocità di trasmissione	9600 Baud
Lunghezza del cablaggio	1000 m massimo (lunghezza totale del bus I/E H-LINK)
Numero massimo di gateway	1 Gateway (HC-A(8/16/64)MB)/SISTEMA H-LINK
Numero massimo di UI	HC-A64MB → fino a 64 * unità interne
	HC-A16MB → fino a 16 * unità interne
	HC-A8MB → fino a 8 * unità interne
	HC-A64NET → fino a 64 * unità interne

3 INSTALLAZIONE

3.1 PRECAUZIONI PER LA SICUREZZA

PERICOLO

- ***Leggere attentamente il presente manuale prima di eseguire l'installazione.***
- ***Non installare questo dispositivo in un luogo accessibile al pubblico. Installarlo in involucri per dispositivi elettrici, che siano accessibili solo tramite l'utilizzo di uno strumento e che, inoltre, forniscano una protezione contro eventuali disturbi elettromagnetici.***
- ***Effettuare l'installazione correttamente prima di collegare l'alimentazione elettrica. Scollegare sempre l'alimentazione elettrica dal dispositivo prima di eventuali attività di manutenzione o servizio.***

AVVERTENZA

- *Questo dispositivo deve essere utilizzato unicamente da adulti competenti, ai quali siano state fornite informazioni tecniche o istruzioni atte a garantire un uso corretto e sicuro del dispositivo.*
- *E' un prodotto classe A. In un ambente domestico questo prodotto potrebbe causare interferenze radio nel qual caso l'utente deve adottare misure adeguate.*
- *Mantenere i bambini fuori dalla portata dei dispositivi elettrici.*
- *Accertarsi che i componenti elettrici non in dotazione (interruttori di alimentazione, interruttori di circuito, cavi, connettori e morsetti) siano stati scelti accuratamente tenendo presente quanto precisato nei dati elettrici indicati nel presente documento e che siano conformi alle normative nazionali e locali in vigore. Se necessario, rivolgersi all'ente locale competente per informazioni riguardanti standard, norme, regolamentazioni, ecc. in vigore.*
- *Non installare i Gateway Rete / Modbus:*
  - *in luoghi dove eventuale vapore, olio o liquidi dispersi potrebbero provocare danni al dispositivo.*
  - *in luoghi in cui si sia rilevato accumulo, generazione o perdite di gas infiammabili.*
  - *vicino a qualunque fonte di calore o di rumori elettromagnetici.*
  - *in prossimità del mare, in ambienti salini, acidi o alcalini.*

ITALIANO

3.2 COMPONENTI IN DOTAZIONE

Dispositivo gateway		Manuale di istruzioni		Memoria pen drive USB	
1x	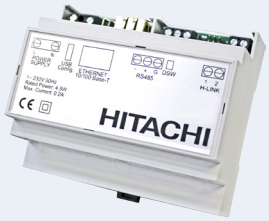	1x		1x	

3.3 DIMENSIONI

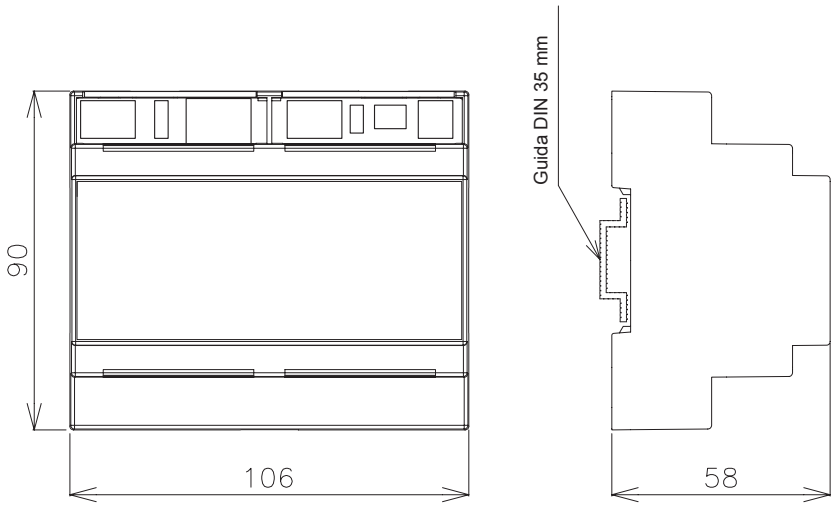

3.4 DESCRIZIONE DEI COMPONENTI

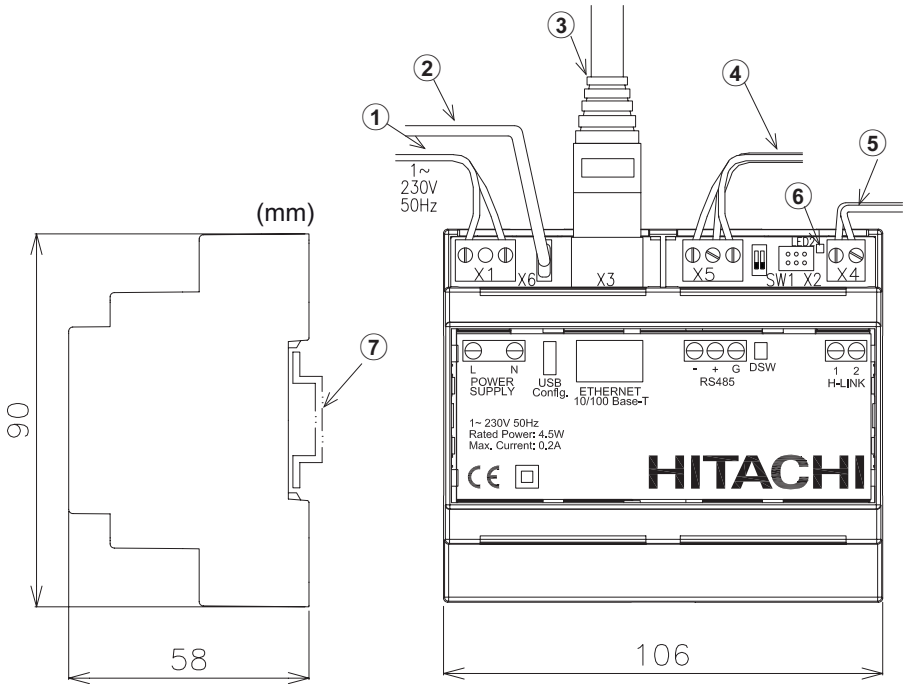

Nº	Descrizione
1	Alimentazione elettrica esterna
2	Cavo USB per la configurazione
3	Cavo Ethernet RJ45 HC-A(8/16/64)MB: Modbus TCP HC-A64NET : TCP/IP
4	Cavo RS485 Modbus RTU per HC-A(8/16/64)MB Non disponibile per HC-A64NET
5	Bus di comunicazione H-LINK con le unità Hitachi
6	Indicatore LED di funzionamento
7	Guida DIN 35mm per i collegamenti all'interno del quadro elettrico

3.5 SPAZIO DI INSTALLAZIONE

Mantenere libera l'aria grigia per il corretto funzionamento del dispositivo.

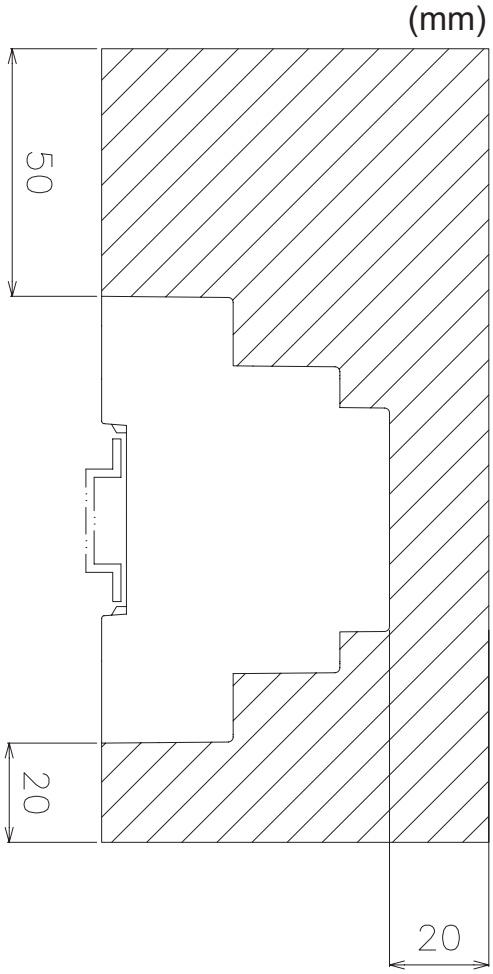

3.6 PROCEDURA DI INSTALLAZIONE

PERICOLO

- ***Non installare questa unità in luoghi accessibili al pubblico. Installare l'unità all'interno di contenitori o in altri luoghi accessibili solo attraverso l'utilizzo di uno strumento.***
- ***Effettuare l'installazione correttamente prima di collegare l'alimentazione elettrica. Scollegare sempre l'alimentazione elettrica dal dispositivo prima di eventuali attività di manutenzione o servizio***

AVVERTENZA

- *Accertarsi che i componenti elettrici non in dotazione (interruttori di alimentazione, interruttori di circuito, cavi, connettori e morsetti) siano stati scelti accuratamente tenendo presente quanto precisato nei dati elettrici indicati nel presente documento e che siano conformi alle normative nazionali e locali in vigore*
- *Le unità non collegate o che non si trovano sotto tensione nel momento in cui vengono attivati i gateway Rete / Modbus, non verranno riconosciute e dovranno essere configurate in seguito.*
  - *Prima di alimentare e accendere i gateway Rete/Modbus, è necessario controllare che:*
    - *1. Tutti i circuiti da collegare siano applicati correttamente.*
    - *2. Tutte le connessioni H-Link siano state impostate.*
    - *3. Il collegamento al Modbus sia stato eseguito correttamente.*
- *Accorciare il più possibile i cavi dei segnali. Mantenere una distanza superiore a 150 mm da altri cavi di alimentazione. Non cablarli insieme (anche se possono incrociarsi). Se fosse necessario installarli insieme, prendere le seguenti precauzioni per evitare disturbi:*
  - *Per le comunicazioni, utilizzare un cavo schermato con messa a terra a un lato.*

3.7 CONFIGURAZIONE DI RETE

Per facilitare la configurazione, all'interno della memory stick USB, viene fornito uno strumento software per computer, il "Net configuration Tool".

3.7.1 Requisiti del computer

E' richiesto un personal computer con Microsoft Windows 7 o superiore, una porta USB libera e Java.

3.7.2 Parametri configurabili:

- *Parità: Pari/Dispari/Disattivato*
- *Velocità di comunicazione: 9600/19200 Bps*
- *Indirizzo Modbus*
- *Modbus TCP IP*

3.7.3 Procedura di configurazione

◆ Configurazione attraverso la porta USB

Questo metodo è necessario quando l'IP del dispositivo è sconosciuto.

1. Collegare il dispositivo di rete ad un computer attraverso un cavo USB (non in dotazione, ma fornito con il kit di configurazione di rete)
2. Selezionare la porta di comunicazione del computer.
3. Premere il pulsante sullo schermo

ITALIANO

◆ Configurazione attraverso la porta Ethernet

1 Collegare il dispositivo di rete ad un computer attraverso un cavo ethernet (non in dotazione, ma fornito con il kit di configurazione di rete o anche con il CSNET MANAGER)

2 Inserire i seguenti parametri:

- Indirizzo IP: 192.168.0.4
- Porta: Modbus Gateway/ HC-A64NET

3 Premere il pulsante sullo schermo

◆ Configurazione di dispositivo e di comunicazione

HC-A(8/16/64)MB

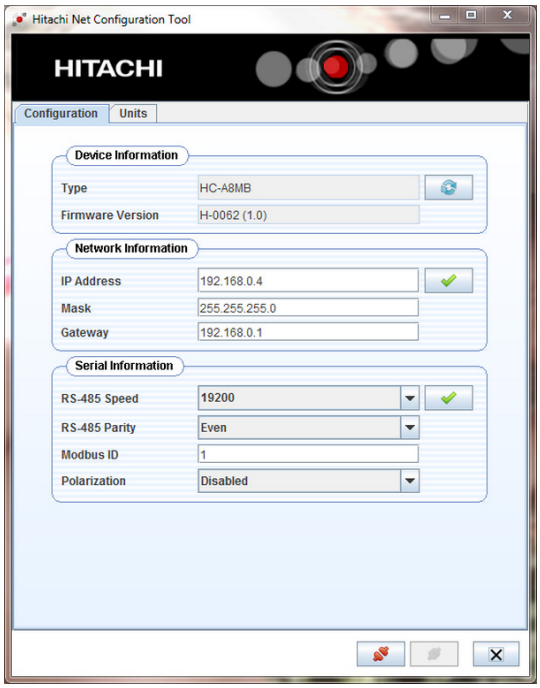

HC-A64NET

“Informazioni sul dispositivo”

Controllare che il dispositivo di rete sia correttamente visualizzato nella tabella “Informazioni sul dispositivo”. Se necessario premere il pulsante aggiorna.

“Informazioni di rete”

Quando il dispositivo di rete è integrato alla rete LAN / Modbus attraverso un cavo Ethernet, configurare i seguenti parametri:

- Indirizzo IP: Permettere la modifica dell’IP del dispositivo di rete (“192.168.0.4” di default).
- Maschera: Chiedere al proprio tecnico informatico il valore corretto (“255.255.255.0” di default).
- Gateway: Indirizzo gateway LAN (“192.168.0.1” di default).

“Informazioni di serie”

Quando il dispositivo di rete è integrato alla rete Modbus attraverso una porta seriale RS485, configurare i seguenti parametri:

- RS485: 9600 / 19200 Bps (“19200” Bps di default)
- RS485: Parità None / Pari / Dispari (“Pari” di default)
- Modbus Id: 1~128 (“1” di default)
- Polarizzazione: Polarizzazione comunicazione (“Disabilitata” di default)

NOTA

Questa sezione non è disponibile per il HC-A64NET

“Configurazione dell’Id dell’unità”

- Può essere assegnato un indirizzo automatico premendo
- La configurazione manuale dell’indirizzo può essere fatta attraverso l’assegnamento di ciascun Id ad uno specifico indirizzo H-LINK
  - *Indirizzo dell’unità esterna (Ou) e indirizzo dell’unità interna (Iu)*

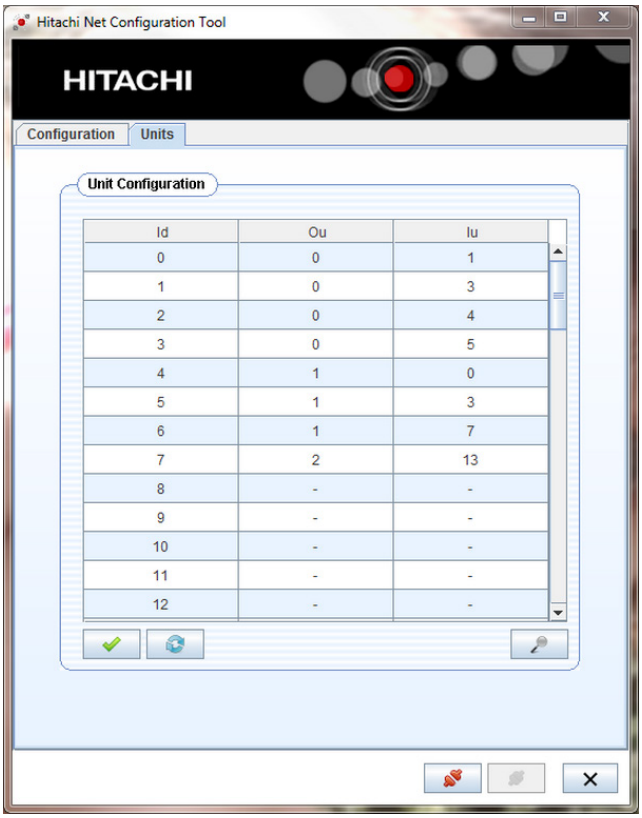

Id	Ou	Iu
0	0	1
1	0	3
2	0	4
3	0	5
4	1	0
5	1	3
6	1	7
7	2	13
8	-	-
9	-	-
10	-	-
11	-	-
12	-	-

- Confermare la configurazione premendo
- Il pulsante aggiorna deve essere premuto quando si modificano le unità collegate alla rete

NOTA

Questa sezione non è disponibile per il HC-A64NET

ITALIANO

4 COLLEGAMENTO DELLO SCHEMA ELETTRICO

Nome	Collegamento	Specifiche del cavo
X1	Alimentazione elettrica (1)	Utilizzare cavi da 0,75 mm2 che non siano più leggeri dei cavi flessibili con rivestimento in policloroprene (codice 60245 IEC 57).
X3	Ethernet (1)	Cavi LAN categoria 5 o superiore. Collegamento al PC: Utilizzare il cavo incrociato (1 cavo disponibile nel kit di configurazione di rete) per il collegamento diretto. Collegamento LAN: È necessario un cavo diretto (non in dotazione) per il collegamento a un distributore commerciale (Hub).
X4	H-LINK (1)	Doppino ritorto schermato 0,75 mm². I cavi schermati devono essere messi a terra solo su un lato.
X5	RS485 (1)	Cablaggio cavo tripolare da 0,75 mm² messi a terra solo su un lato. Utilizzare un colore differente per ogni cavo.
X6	USB (1)	Cavo USB Mini-B (1 cavo disponibile nel kit di configurazione di rete)

NOTA

(1) Questi cavi non sono in dotazione.

4.1 CONFIGURAZIONE DSW

Nome	Funzione	Impostazione di fabbrica	Descrizione
SW1	Configurazione		SW1-1: Resistenza finale Modbus (*). SW1-2: Non usato (lasciare sempre “ON”)

NOTA

(*) Non applicabile al HC-A64NET.

5 FUNZIONAMENTO

5.1 COMPATIBILITÀ

Questi dispositivi non sono compatibili con nessuno dei seguenti controller Hitachi:

- *Controlli remoti centralizzati*
- *Controlli di aria condizionata per edifici (*)*
- *Altri Gateway BMS Hitachi (LONWORKS, BACNET, KNX, FIDELIO)*
- *Altri Gateway MODBUS Hitachi*
- *Altre unità dello stesso modello*

NOTA

(*) HC-A64NET è compatibile con il CSNET MANAGER.

5.2 UNITÀ INTERNE

5.2.1 Dati disponibili per HC-A(8/16/64)MB

Offset (1)	Nome	Descrizione	Valori	Lettura/Scrittura
0	EXIST	Esiste	0: Non esiste 1: Esiste	Lettura
1	SYSTEM_ADDRESS	Indirizzo sistema	0~63	Lettura
2	UNIT_ADDRESS	Indirizzo unità		
3	SET_ONOFF	Ordine di impostazione avvio/arresto	0: Arresto 1: Avvio	Lettura/Scrittura
4	SET_MODE	Ordine di impostazione modalità	0: Freddo 1: Deumidificazione 2: Ventilazione 3: Caldo 4: Auto	Lettura/Scrittura
5	SET_FAN	Ordine di impostazione ventola	0: Bassa 1: Media 2: Alta 3: High2 4: Auto	Lettura/Scrittura
6	SET_TSET	Temperatura di impostazione	ºC (Impostare secondo il campo di lavoro dell'unità)	Lettura/Scrittura
7	SET_LOUVER	Impostazione feritoia	da 0 a 7 (7 è Auto)	Lettura/Scrittura
8	SET_CENTRAL	Impostazione centrale (3)	Bit 0: On/Off (può essere sempre arrestato) Bit 1: Modalità Bit 2: Temperatura impostazione Bit 3: Ventilazione Bit 4: Louver	Lettura/Scrittura
9	READ_ONOFF	Stato On/Off	0: Off 1: On	Lettura
10	READ_MODE	Stato della modalità	0: Freddo 1: Deumidificazione 2: Ventilazione 3: Caldo 4: Auto	Lettura
11	READ_FAN	Stato ventilazione	0: Bassa 1: Media 2: Alta 3: High2 4: Auto	Lettura
12	READ_TSET	Stato temp. di impostazione	ºC (Impostare secondo il campo di lavoro dell'unità)	Lettura
13	READ_LOUVER	Stato feritoia	da 0 a 7 (7 è Auto)	Lettura
14	(non utilizzato)	(non utilizzato)	(non utilizzato)	(non utilizzato)
15	TIN	Lettura temp. di ingresso (2)	-63ºC ~ 63ºC	Lettura
16	TOUT	Lettura temp. di uscita (2)	-63ºC ~ 63ºC	Lettura
17	TGAS	Lettura temp. del tubo del gas (2)	-63ºC ~ 63ºC	Lettura
18	TLIQUID	Lettura temp. del tubo del liquido (2)	-63ºC ~ 63ºC	Lettura
19	ERROR_CODE	Codice di allarme	Allarme dall'unità dal display a 7 segmenti	Lettura

Offset (1)	Nome	Descrizione	Valori	Lettura/Scrittura
20	STOP_CAUSE	Causa dell'arresto del compressore	(Leggere manuale di servizio dell'unità)	Lettura
21	VALVE_OPEN	Apertura della valvola di espansione dell'unità interna	0~100	(non utilizzato)
22	OPER_CONDITION	Condizione funzionamento unità	0: OFF 1: Thermo OFF 2: Thermo ON 3: Allarme	Lettura
23	(non utilizzato)	(non utilizzato)	(non utilizzato)	(non utilizzato)
24	AMBIENT TEMPERATURE	Temperatura ambiente (2)	-63ºC ~ 63ºC	Lettura
25	RCS_TEM	Temp. controllo remoto (solo se disponibile nell'unità) (2)	-63ºC ~ 63ºC	Lettura
26	RCS_CONFIG	Configurazione degli switch Telecomando	b0: 0 Principale / 1 Secondaria b1: 0 con controllo remoto / 1 senza controllo remoto	Lettura/Scrittura
27	RCS_GROUP	Telecomando gruppo interruttore	0: Nessun gruppo 1~255	Lettura/Scrittura
28~30	(non utilizzato)	(non utilizzato)	(non utilizzato)	(non utilizzato)
31	**REM_TEM**	Temp. sensore remoto (2)	-63ºC ~ 63ºC	Lettura

NOTA

- *(1) L'indirizzo del registro è calcolato come: "N + (Indirizzo * 32) + Offset" dove:*
- *N: La posizione nella tabella dei dati è la 2000, la posizione 20000 è inoltre disponibile per la compatibilità con il vecchio gateway Modbus.*
- *Indirizzo: l'indirizzo dell'unità interna come configurato dal software di configurazione.*
- *(2) Questi numeri si riferiscono a un valore a 16 bit che utilizza un formato di configurazione in complemento a 2 per valori negativi*
- *(3) Bit 0 (on/off) e Bit 4 (louver) selezionabili solo quando tutte le centrali sono attivate.*
- *Per bloccare completamente le impostazioni dal controllo remoto (centrale mostrato nel controllo remoto) impostare questo registro a 31.*

5.2.2 Dati disponibili per HC-A(16/64)MB

Offset	Descrizione	Valori	Lettura/Scrittura	Disponibilità		
				VRF	RAC	ATW
0	Esiste	0: No exist	Lettura	O	O	
		1: Esiste				
1	Indirizzo del sistema	H-LINK 1: 0~15	Lettura	O	O	
2	Indirizzo dell'unità	H-LINK 2: 0~63		O	O	
3	Type	0: Indoor Unit	Lettura	O	O	
4	Ordine di impostazione avvio/arresto	0: Arresto	Lettura/Scrittura	O	O	
		1: Avvio				
5	Ordine di impostazione della modalità	0: Freddo	Lettura/Scrittura	O	O	
		1: Deumidificatore				
		2: Ventola				
		3: Caldo				
		4: Auto				
6	Ordine di impostazione della ventola	0: Basso	Lettura/Scrittura	O	O	
		1: Medio				
		2: Alto				
		3: High2				
		4: Auto				
7	Temperatura di impostazione	ºC (set according to the unit working range)	Lettura/Scrittura	O	O	
8	Temperature setting with 0.5°C intervals	ºC x 10 (19.5ºC read as 195)	Lettura/Scrittura	O		
9	Heating temperature setting for AUTO Cool/Heat	ºC	Lettura/Scrittura	O		
10	Heating Temperature setting for AUTO Cool/heat with 0.5°C intervals	ºC x 10 (19.5ºC read as 195)	Lettura/Scrittura	O		
11	Cooling Temperature setting for AUTO Cool/heat	ºC	Lettura/Scrittura	O		
12	Cooling Temperature setting for AUTO Cool/heat with 0.5°C intervals	ºC x 10 (19.5ºC read as 195)	Lettura/Scrittura	O		
13	Impostazione del deflettore	0 ~ 7 (7 is Auto)	Lettura/Scrittura	O		
14	Central setting (2)	Bit 0: On/Off (always can be stopped)	Lettura/Scrittura	O	O	
		Bit 1: Modalità				
		Bit 2: Impostazione temp				
		Bit 3: Ventola				
		Bit4: Louver				
15	Stato On/Off	0: Off	Lettura	O	O	
		1: On				
16	Stato della modalità	0: Freddo	Lettura	O	O	
		1: Deumidificatore				
		2: Ventola				
		3: Caldo				
		4: Auto				

ITALIANO

Offset	Descrizione	Valori	Lettura/Scrittura	Disponibilità		
				VRF	RAC	ATW
17	Stato della ventola	0: Basso 1: Medio 2: Alto 3: High2 4: Auto	Lettura	O	O	
18	Stato della temperatura di impostazione	ºC (set according to the unit working range)	Lettura	O	O	
19	Temperature setting with 0.5°C intervals status	ºC x10 (19.5ºC read as 195)	Lettura	O		
20	Heating temperature setting for AUTO Cool/Heat status	ºC	Lettura	O		
21	Heating Temperature setting for AUTO Cool/heat with 0.5°C intervals status	ºC x 10 (19.5ºC read as 195)	Lettura	O		
22	Cooling Temperature setting for AUTO Cool/heat status	ºC	Lettura	O		
23	Cooling Temperature setting for AUTO Cool/heat with 0.5°C intervals status	ºC x 10 (19.5ºC read as 195)	Lettura	O		
24	Stato della feritoia	0 ~ 7 (7 is Auto)	Lettura	O		
25	Air inlet temperature reading	da -63ºC a 63ºC	Lettura	O		
26	Air outlet temperature reading	da -63ºC a 63ºC	Lettura	O		
27	Lettura della temperatura del tubo del gas	da -63ºC a 63ºC	Lettura	O		
28	Lettura della temperatura del tubo del liquido	da -63ºC a 63ºC	Lettura	O		
29	Codice di allarme	Allarme dall'unità dal display a 7 segmenti	Lettura	O	O(1)	
30	Causa dell’arresto del compressore	(Leggere il manuale di servizio dell'unità)	Lettura	O		
31	Apertura della valvola di espansione dell'unità interna	0~100	Lettura	O		
32	Condizione di funzionamento dell'unità	0: OFF 1: Thermo OFF 2: Thermo ON 3: Allarme	Lettura	O	O	
33	Remote temperature sensor (THM4) value	da -63ºC a 63ºC	Lettura	O		
34	Remote control switch temperature (only when available in the unit)	da -63ºC a 63ºC	Lettura	O	O	
35	Configurazione del controllo remoto	b0: 0 Master/1Slave b1: 0 wih RCS/1 Without RCS	Lettura/Scrittura	O		
36	Gruppo di controllo remoto	0: No group 1~255	Lettura/Scrittura	O		

Offset	Descrizione	Valori	Lettura/Scrittura	Disponibilità		
				VRF	RAC	ATW
37	CN3 Configuration status	b0: Input 1 open/close b1: Input 2 open/close b2: Enabled/Disabled (Indicates if the unit has CN3 enabled with any function)	Lettura	O		
38~49	Riservata					
50	Controllo dell'unità Avvio/Arresto	0: Arresto 1: Avvio	Lettura/Scrittura			O
51	Controllo dell'unità modalità	0: Freddo 1: Heat	Lettura/Scrittura			O
52	Controllo del circuito 1 Avvio/Arresto	0: Arresto 1: Avvio	Lettura/Scrittura			O
53	Control Heat. OTC Zone 1	0: No 1: Points 2: Gradient 3: Fix	Lettura/Scrittura			O
54	Control Cool. OTC 1	0: No 1: Points 2: Fix	Lettura/Scrittura			O
55	Control Circuit 1: Water heating Fix Setting Temp	0~80	Lettura/Scrittura			O
56	Control Circuit 1: Water cooling Fix Setting Temp	0~80	Lettura/Scrittura			O
57	Controllo del circuito 1: modalità ECO	0: ECO 1: Comfort	Lettura/Scrittura			O
58	Controllo del circuito 1: temperatura di compensazione ECO per il riscaldamento	1~10	Lettura/Scrittura			O
59	Control Circuit 1: Cool ECO Offset Temperature	1~10	Lettura/Scrittura			O
60	Control Circuit 1: External MBS/KNX Thermostat Available	0: Not Available 1: Available	Lettura/Scrittura			O
61	Control Zone 1: Thermostat Setting	0~65535	Lettura/Scrittura			O
62	Control Zone 1: Room Ambient Temperature	-32667~32667	Lettura/Scrittura			O
63	Control Circuit 2 Run/Stop	0: Arresto 1: Avvio	Lettura/Scrittura			O
64	Control Heat. OTC Zone 2	0: No 1: Points 2: Gradient 3: Fix	Lettura/Scrittura			O
65	Control Cool. OTC Zone 2	0: No 1: Points 2: Fix	Lettura/Scrittura			O

ITALIANO

Offset	Descrizione	Valori	Lettura/Scrittura	Disponibilità		
				VRF	RAC	ATW
66	Control Circuit 2: Water heating Fix Setting Temp	0~80	Lettura/Scrittura			O
67	Control Circuit 2: Water cooling Fix Setting Temp	0~80	Lettura/Scrittura			O
68	Control Circuit 2: Eco mode	0: ECO 1: Comfort	Lettura/Scrittura			O
69	Control Circuit 2: Heat ECO Offset Temperature	1~10	Lettura/Scrittura			O
70	Control Circuit 2: Cool ECO Offset Temperature	1~10	Lettura/Scrittura			O
71	Control Circuit 2: External MBS/KNX Thermostat Available	0: Not Available 1: Available	Lettura/Scrittura			O
72	Control Zone 2: Thermostat Setting	0~65535	Lettura/Scrittura			O
73	Control Zone 2: Room Ambient Temperature	-32667~32667	Lettura/Scrittura			O
74	Controllo serbatoio di ACS Avvio/ Arresto	0: Arresto 1: Avvio	Lettura/Scrittura			O
75	Controllo temperatura di impostazione del serbatoio di ACS	0~80	Lettura/Scrittura			O
76	Controllo impulso di ACS	0: No request 1: Request	Lettura/Scrittura			O
77	Riservata					
78	Controllo modalità di richiesta dell'ACS	0: Standard 1: High demand	Lettura/Scrittura			O
79	Controllo della piscina Avvio/Arresto	0: Arresto 1: Avvio	Lettura/Scrittura			O
80	Controllo temperatura di impostazione della piscina	0~80	Lettura/Scrittura			O
81	Controllo antilegionella Avvio/Arresto	0: Arresto 1: Avvio	Lettura/Scrittura			O
82	Controllo temperatura di impostazione antilegionella	0~80	Lettura/Scrittura			O
83	Controllo blocco/sblocco menù	0: No 1: Block (user cannot access the menu)	Lettura/Scrittura			O
84	Control Yutaki Forced OFF	0: Normal Operation 1: Forced OFF	Lettura/Scrittura			O
85	Space Heating Heater Forced OFF	0: Normal Operation 1: Heater Forced OFF	Lettura/Scrittura			O
86	Controllo errore/allarme	0: No 1: Alarm	Lettura/Scrittura			O
87~99	Riservata					
100	Stato dell'unità avvio/arresto	0: Arresto 1: Avvio	Lettura			O
101	Status Mode	B0: 0: Cool / 1: Heat B1: 0: Normal / 1: Auto	Lettura			O

Offset	Descrizione	Valori	Lettura/Scrittura	Disponibilità		
				VRF	RAC	ATW
102	Stato del circuito 1 Avvio/Arresto	0: Arresto 1: Avvio	Lettura			O
103	Status Heat. OTC 1	0: No 1: Points 2: Gradient 3: Fix	Lettura			O
104	Status Cool. OTC 1	0: No 1: Points 2: Fix	Lettura			O
105	Status Circuit 1: Water heating Fix Setting Temp	0~80	Lettura			O
106	Status Circuit 1: Water cooling Fix Setting Temp	0~80	Lettura			O
107	Stato del circuito 1: modalità ECO	0: ECO 1: Comfort	Lettura			O
108	Stato del circuito 1: temperatura di compensazione ECO per il riscaldamento	1~10	Lettura			O
109	Status Circuit 1: Cool ECO Offset Temperature	1~10	Lettura			O
110	Stato del circuito 1: temperatura di impostazione del termostato	50~350 (5,0~35,0)	Lettura			O
111	Stato del circuito 1: temperatura ambiente del termostato	0~1000 (0,0~100,0)	Lettura			O
112	Stato del circuito 1: temperatura di impostazione wireless	50~350 (5,0~35,0)	Lettura			O
113	Stato del circuito 1: temperatura ambiente wireless	0~1000 (0,0~100,0)	Lettura			O
114	Status Circuit 2 Run/Stop	0: Arresto 1: Avvio	Lettura			O
115	Stato modalità OTC 2 riscaldamento	0: No 1: Points 2: Gradient 3: Fix	Lettura			O
116	Stato modalità OTC 2 raffreddamento	0: No 1: Points 2: Fix	Lettura			O
117	Status Circuit 2: Water heating Fix Setting Temp	0~80	Lettura			O
118	Status Circuit 2: Water cooling Fix Setting Temp	0~80	Lettura			O
119	Status Circuit 2: Eco mode	0: ECO 1: Comfort	Lettura			O
120	Stato del circuito 1: temperatura di compensazione ECO per il riscaldamento	1~10	Lettura			O

Offset	Descrizione	Valori	Lettura/Scrittura	Disponibilità		
				VRF	RAC	ATW
121	Status Circuit 1: Cool ECO Offset Temperature	1~10	Lettura			O
122	Status Zone 2: Thermostat Setting	50~350 (5,0~35,0)	Lettura			O
123	Status Zone 2: Ambient Temperature	0~1000 (0,0~100,0)	Lettura			O
124	Status Circuit 2: Wireless Setting Temperature	50~350 (5,0~35,0)	Lettura			O
125	Status Circuit 2: Wireless Room temperature	0~1000 (0,0~100,0)	Lettura			O
126	Stato serbatoio di ACS Avvio/Arresto	0: Arresto 1: Avvio	Lettura			O
127	Stato temperatura di impostazione del serbatoio di ACS	0~80	Lettura			O
128	Status DHW Boost	0: Disable 1: Enable	Lettura			O
129	Riservata					
130	Stato modalità di richiesta dell'ACS	0: Standard 1: High demand	Lettura			O
131	Status DHW Temperature	-80~100	Lettura			O
132	Stato della piscina Avvio/Arresto	0: Arresto 1: Avvio	Lettura			O
133	Status Swim. Pool Setting Temperature	0~80	Lettura			O
134	Status Swim. Pool Temperature	-80~100	Lettura			O
135	Status AntiLeg. Avvio/arresto	0: Arresto 1: Avvio	Lettura			O
136	Stato temperatura di impostazione antilegionella	0~80	Lettura			O
137	Stato blocco/sblocco menù	0: No 1: Block	Lettura			O
138	Stato errore/allarme	0: No 1: Alarm	Lettura			O
139	LCD modalità centrale	0: Locale 1: Air (Not available for Yutampo) 2:Water (Not available for Yutampo) 3: Full	Lettura			O

Offset	Descrizione	Valori	Lettura/Scrittura	Disponibilità		
				VRF	RAC	ATW
140	Configurazione sistema	b0: Zone 1 Heating Available	Lettura			O
		b1: Zone 2 Heating Available				
		b2: Zone 1 Cooling Available				
		b3: Zone 2 Cooling Available				
		b4: DHWT Available				
		b5: SWP Available				
		b6: Room thermostat available Zone 1				
		b7: Room thermostat available Zone 2				
		b8: Wireless Setting C1				
		b9: Wireless Setting C2				
		b10: Wireless Room Temperature C1				
		b11: Wireless Room Temperature C2				
		b12: Slave Unit				
141	Stato Operativo	0: OFF	Lettura			O
		1: Cool Demand –OFF				
		2: Cool Thermo-OFF				
		3: Cool Thermo-ON				
		4: Heat Demand-OFF				
		5: Heat Thermo-OFF				
		6: Heat Thermo-ON				
		7: DHW-OFF				
		8: DHW-ON				
		9: SWP-OFF				
		10: SWP-ON				
		11: Alarm				
142	Tº ambiente esterna (Outdoor ambient temperature)	-80~100	Lettura			O
143	Tº di ingresso dell'acqua (Water Inlet unit temperature)	-80~100	Lettura			O
144	Tº di uscita dell'acqua (Water outlet unit temperature)	-80~100	Lettura			O
145	H-Link Communication State	0: No alarm	Lettura			O
		1: There is no communication with RCS or Yutaki unit during more than 180 seconds				
		2: Data initialization				
146	Software PCB		Lettura			O

ITALIANO

Offset	Descrizione	Valori	Lettura/Scrittura	Disponibilità		
				VRF	RAC	ATW
147	Software LCD		Lettura			O
148	Taglia Unità		Lettura			O
149	Unit Power Consumption		Lettura			O
150	Water Outler HP (TwoHP)	0~100 solo per unità YUTAKI S e S Combi	Lettura			O
151	Ta1av: Outdoor Unit Ambient Average Temperature	-80~100	Lettura			O
152	Ta2: Second Ambient Temperature (inst)	-80~100	Lettura			O
153	Ta2av: Second Ambient Temperature (avg)	-80~100				O
154	O2: Water outlet Temp 2 (Two2)	-80~100	Lettura			O
155	O3: Water outlet Temp 3 (Two3)	-80~100	Lettura			O
156	Tg: Gas Temperature (THMg)	-80~100	Lettura			O
157	Tl: Liquid Temperature (THMl)	-80~100	Lettura			O
158	EVI: Indoor expansion valve openning	0~100	Lettura			O
159	CD: Capacity Data		Lettura			O
160	Mixing Valve Opening	0~100	Lettura			O
161	Sbrinamento	0: No defrosting	Lettura			O
		1: Defrosting				
162	Modello di unità	0: Yutaki S	Lettura			O
		1: Yutaki SC				
		2: Yutaki S80				
		3: Yutaki M				
		4: Yutaki SC Lite (New)				
		5: Yutampo (New)				
		6: YCC (New)				
163	Th: Water Temp Setting (Ttwo)	-80~100	Lettura			O
164	Flusso dell'acqua	Water Flow [0.1m3/h]	Lettura			O
165	Pump Speed	0~100	Lettura			O
166	Stato del sistema 2	Bit 0: Defrost	Lettura			O
		Bit 1: Solar				
		Bit 2: Water Pump 1				
		Bit 3: Water Pump 2				
		Bit 4: Water Pump 3				
		Bit 5: Compressor ON				
		Bit 6: Boiler ON				
		Bit 7: DHW Heater				
		Bit 8: Space Heater				
		Bit 9: Smart function input enabled				
		Bit10: Forced OFF				
		Bit11: DHW recirculation Pump State				
		Bit12: Solar Pump Output State				

Offset	Descrizione	Valori	Lettura/Scrittura	Disponibilità		
				VRF	RAC	ATW
167	Numero di allarme:	0: Alarm XXX: Alarm number	Lettura			O
168	Temperatura di scarico R134a		Lettura			O
169	Temperatura di aspirazione R134a		Lettura			O
170	Pressione di scarico R134a		Lettura			O
171	Pressione di aspirazione R134a		Lettura			O
172	Frequenza del compressore R134a		Lettura			O
173	Apertura della valvola di espansione interna R134a		Lettura			O
174	Valore della corrente del compressore R134a		Lettura			O
175	R134a Retry Code		Lettura			O
176	R134 Te SH		Lettura			O
177	R134 Secondary Current		Lettura			O
178	R134 Stop Code		Lettura			O
179~ 189	Riservata					
190	YCC - Enabled Units	0~8	Lettura			O
191	YCC - Working Units	0~8	Lettura			O
192	YCC - Required Units	0~8	Lettura			O

ITALIANO

NOTE

- *Register address is calculated as: 5000+(Modbus_Id*200)+offset*
- *Modbus_Id as configured by configuration software*
- *For VRF / Package units, only the relevant data are available (heating units registers will not give any value). The situation is the same for heating units (registers related to air/air units will not give any value).*
- *Availability:*
  - PAC: VRF and package units.
  - RAC: Domestic units connected to the H-link via PSC-6RAD or SPX-RAMHLK
  - ATW: Air to water units.
- *(1) Take into account only if it is different from zero.*
- *(2) Bit 0 (ON/OFF) and Bit 4 (Louver) selectable only when all centrals are actived.*
- *In order to full lock setting from RCS (Central shown in RCS) set this register to 31*

5.3 UNITÀ ESTERNE

Some state registers about outdoor unit have been added. Using these registers it is now possible to know the status of the refrigerant cycle. Some control registers have also been added.

Offset	Descrizione	Valori	Lettura/Scrittura
0	Temperatura dell'aria esterna	da -63ºC a 63ºC	Lettura
1	Compressor Discharge Temperature	0 ~ 200 ºC	Lettura
2	Heating Evaporating Temperature		Lettura
3	Number of operating Compressor		Lettura
4	Pressione di scarico	0.0 ~ 5.0 MPa (0.1 MPa)	Lettura
5	Pressione di aspirazione	-0.2 ~2.0MPa (0.1 MPa or 0.01MPa depending unit)	Lettura
6	Total Current	0 ~ 255 A	Lettura
7	Total Real Frequency	0 ~ 255 Hz	Lettura
8	EVO1	0 ~ 100 %	Lettura
9	EVO2 / Hot Bypass	0 ~ 100 %	Lettura
10	EVB	0 ~ 100 %	Lettura
11	Outdoor Unit Option Enabled	0: Disable	Lettura/Scrittura
		1: Enable (it's possible to use the following options, also if the value of register 16 "Power Level Set" is 1)	
12	Noise Control Enabled	0: Disable	Lettura/Scrittura
		1: Enable (it's possible to send the noise level)	
13	Noise Control Level Set	0~9 (See the service manual of Outdoor unit, function db)	Lettura/Scrittura
14	Power Control Enabled	0: Disable	Lettura/Scrittura
		1: Enable (it's possible to send the power level)	
15	Power Level	0~100%	Lettura/Scrittura
16	Power Level Set	0~100%	Lettura
17	Power Level Current Value	0~100%	Lettura
18	Power Control Possible	0: Not possible	Lettura
		1: Possible	

NOTE

- *Register address is calculated as: 5000+(Modbus_Id*200)+offset*
- *Modbus_Id as configured by configuration software*

5.4 FUNZIONI OPZIONALI

Some optional functions of the indoor units have been added so that they can be managed from the BMS.

Offset	Descrizione	Valori	Lettura/Scrittura
0	b1 (Heating temperature compensation)	0~4	Lettura/Scrittura
1	b2 (Circulation function at heating Thermo-OFF)	0~1	Lettura/Scrittura
2	b4 (Change of filter cleaning period)	0~4	Lettura/Scrittura
3	c5 (Static pressure selection)	0~2	Lettura/Scrittura
4	c8 (Control by the temperature sensor of the remote control switch)	0~2	Lettura/Scrittura
5	Cb (Selection of forced stoppage logic)	0~1	Lettura/Scrittura
6	Cd (Stop of indoor unit fan during cooling Thermo-OFF conditions)	0~1	Lettura/Scrittura
7	CE (Stop of indoor unit fan during heating Thermo-OFF conditions)	0~1	Lettura/Scrittura
8	d1 (Management of indoor unit operation after a power supply cut off -option 1)	0~1	Lettura/Scrittura
9	d3 (Management of indoor unit operation after a power supply cut off -option 2)	0~1	Lettura/Scrittura
10	d4 (RPI(M) Prevention of low air outlet temperature in cooling mode)	0~1	Lettura/Scrittura
11	d5 (Prevention of low air outlet temperature in heating mode)	0~1	Lettura/Scrittura
12	E1 (KPI: Ventilation mode / Econofresh cooling mode)	0~2	Lettura/Scrittura
13	E2 (KPI: Increase of air supply volume / Econofresh enthalpy Sensor)	0~1	Lettura/Scrittura
14	E4 (KPI: Pre-cooling / preheating period / Econofresh: CO2 sensor)	0~2	Lettura/Scrittura
15	E8 (Control for stop of the indoor unit fan during heating Thermo-OFF conditions (with remote sensor THM-R2AE connected to the THM4 connector in the indoor unit PCB)	0~1	Lettura/Scrittura
16	E9 (Intermittent fan operation in heating stop)	0~1	Lettura/Scrittura
17	Eb (Indoor unit fan control during cooling Thermo-OFF conditions)	0~2	Lettura/Scrittura
18	EE (Control in “Automatic” indoor fan speed mode)	0~1	Lettura/Scrittura
19	EF (Control in “Automatic” indoor fan speed mode (supporting High H))	0~1	Lettura/Scrittura
20	H4 (KPI: Operation modes for the ventilation unit with energy recovery)	0~1	Lettura/Scrittura
21	K5 (Detection level of the motion sensor kit)	0~2	Lettura/Scrittura
22	K6 (Selection of allowed operation modes when the control sensor of the indoor unit is set by C8 function)	0~3	Lettura/Scrittura

NOTE

- *Register address is calculated as: 40000+(Modbus_Id*100)+offset*
- *Modbus_Id as configured by configuration software*

5.5 ELENCO CODICI DI ALLARME

L'indirizzo 19 indica il codice di allarme come mostrato nell'unità interna. Fare riferimento al manuale di manutenzione per la descrizione dell'allarme e per la procedura di riparazione in caso di allarme della unità interna o della unità esterna.

5.6 RISOLUZIONE DEI PROBLEMI

CODICE ALLARME	DESCRIZIONE	CONTROMISURA
LED2 lampeggiante	Funzionamento anomalo	Scollegare l'alimentazione elettrica del dispositivo e ripristinarla dopo 5 s. Se il LED2 è ancora lampeggiante contattare l'assistenza clienti Hitachi

6 KIT CONFIGURAZIONE RETE

Questo accessorio fornisce tutti i cavi necessari agli installatori di Hitachi al momento della messa in esercizio di una installazione Modbus.

Elenco dei componenti:

Cavo USB		Cavo Ethernet incrociato		Memoria pen drive USB	
1x		1x		1x	

La memoria pen drive USB include uno strumento software per la verifica delle comunicazioni Modbus durante la messa in esercizio.

Il cavo USB è richiesto esclusivamente durante la configurazione del dispositivo (parametri di rete)

Il cavo Ethernet viene fornito per un collegamento veloce con un laptop allo scopo di testare le comunicazioni Modbus.

1 GUIA DO PRODUTO

1.1 CLASSIFICAÇÃO DAS UNIDADES

Controlo da interface do controlador	Separação com travessão	Compatível com H-LINK II	Número máximo de unidades controláveis (8/16/64)	MB: Gateway Modbus NET: Gateway para CSNET Manager
HC	-	A	X	X

1.2 NOVOS

DESCRIÇÃO
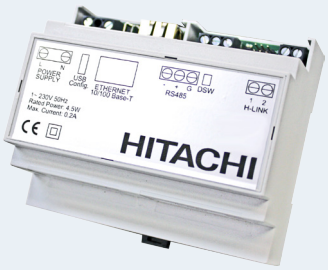
HC-A8MB
HC-A64MB
HC-A64NET

1.3 LISTA DOS ACESSÓRIOS

DESCRIÇÃO
Jogo de configuração da rede

PORTUGUÊS

2 DADOS GERAIS DO PRODUTO NOVO

2.3.1 Especificações de hardware

Item	Especificações
Alimentação	1~ 230 V ±10% 50 Hz
Consumo	4,5W (máximo)
Dimensões exteriores	Largura: 106 mm, Profundidade: 90 mm, Altura: 58 mm
Peso	165 g
Condições de montagem	Interiores (instalação dentro de um recinto fechado com acesso restrito por uma ferramenta)
Temperatura ambiente	0~60 ºC
Humidade	20~85% (não condensada)

2.3.2 Comunicação

◆ RS485

Item	Especificações
Tipo	Modbus RTU para HC-A(8/16/64)MB
	Não disponível para HC-A64NET
Conector	Porta série RS485 (3 terminais de parafuso)
Linha de comunicação	Cabo de par torcido blindado, com um terceiro fio (comum), com polaridade.
Sistema de comunicação	Ligação série multiponto half-duplex
Método de comunicação	Sem paridade ou seleção de paridade ímpar/par. Comprimento dos dados: 8 bits – 1 bit de paragem
Velocidade de transmissão	19200/9600 bauds
Comprimento	Máx. 1200 m de acordo com a EIA-485

◆ Ethernet

Item	Especificações
Tipo	Modbus TCP para HC-A(8/16/64)MB
	Comunicação TCP/IP para HC-A64NET
Conector	Ethernet (RJ45)
Linha de comunicação	Dois cabos de par torcido CAT5 ou superior (T-568A/T-568B)
Sistema de comunicação	Full-duplex
Comprimento	Máx. 100 m de acordo com a IEEE 802.3

◆ H-LINK

Item	Especificações
Comunicação com	HC-A (16/64) MB: SET FREE, UTOPIA, CENTRIFUGAL e AQUECIMENTO HC-A8MB e HC-A64NET: SET FREE, UTOPIA e CENTRIFUGAL
Linha de comunicação	Cabo de par torcido blindado, sem polaridade
Sistema de comunicação	Half-duplex
Método de comunicação	Assíncrona
Velocidade de transmissão	9600 bauds
Comprimento da cablagem	1000 m, no máximo (comprimento total do bus do HLINK I/O)
Número máximo de gateways	1 Gateway (HC-A(8/16/64)MB)/SISTEMA H-LINK
Número máximo de UI	HC-A64MB → até 64 * Unidades Interiores
	HC-A16MB → até 16 * Unidades Interiores
	HC-A8MB → até 8 * Unidades Interiores
	HC-A64NET → até 64 * Unidades Interiores

3 INSTALAÇÃO

3.1 RESUMO DA SEGURANÇA

PERIGO

- ***Leia cuidadosamente este manual antes de executar o trabalho de instalação.***
- ***Não instale este dispositivo em locais acessíveis ao público em geral. Faça a instalação em armários elétricos, acessíveis apenas mediante a utilização de uma ferramenta, e instale também proteção contra eventuais distúrbios eletromagnéticos.***
- ***Não ligue a fonte de alimentação antes de uma instalação correta do dispositivo. Desligue sempre a fonte de alimentação do dispositivo antes de qualquer ação de manutenção ou reparação.***

CUIDADO

- *Este equipamento deve ser utilizado somente por adultos e pessoas habilitadas que tenham recebido as informações ou instruções técnicas para o manejar de forma adequada e segura..*
- *Este é um produto de Classe A. Em ambiente doméstico este produto pode causar interferências de rádio que podem obrigar o utilizador a adotar as medidas específicas.*
- *As crianças devem ser vigiadas para garantir que não tocam no equipamento.*
- *Certifique-se de que os componentes elétricos fornecidos no local (interruptores de alimentação da rede, disjuntores, cabos, conectores e terminais de cabos) foram selecionados corretamente de acordo com os dados elétricos indicados neste documento e de que cumprem as regulamentações locais e nacionais. Se for necessário, consulte a autoridade local para mais informação acerca de normas, regras, regulamentos, etc.*
- *Não instale os gateways de rede / Modbus em locais:*
  - *onde o vapor, óleo ou outros líquidos dispersos possam afetar o dispositivo.*
  - *onde tiver sido detetada acumulação, geração ou fuga de gases inflamáveis.*
  - *próximo de quaisquer fontes de calor ou de fontes de ruídos eletromagnéticos.*
  - *próximo do mar, em ambientes salinos, ácidos ou alcalinos.*

3.2 COMPONENTES FORNECIDOS DE FÁBRICA

Dispositivo gateway		Manual de Instruções		Memória USB	
1x	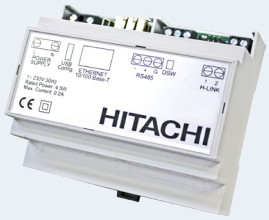	1x		1x	

PORTUGUÊS

3.3 DADOS DIMENSIONAIS

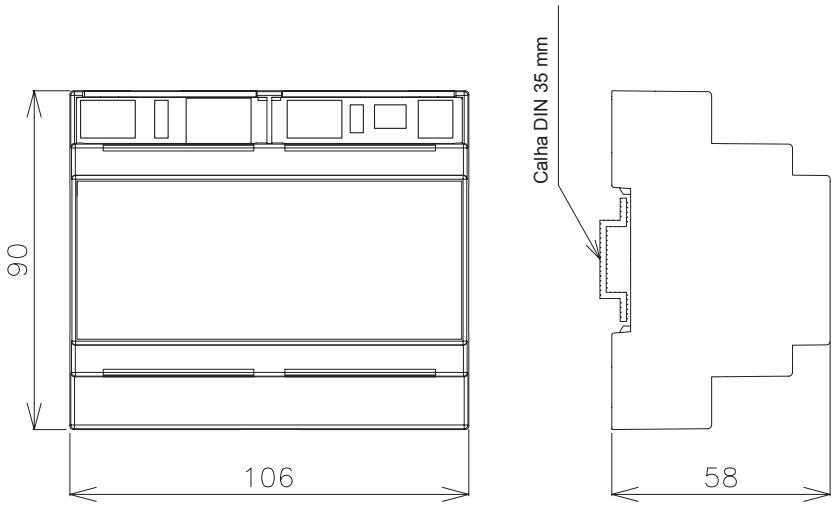

3.4 DESCRIÇÃO DAS PEÇAS

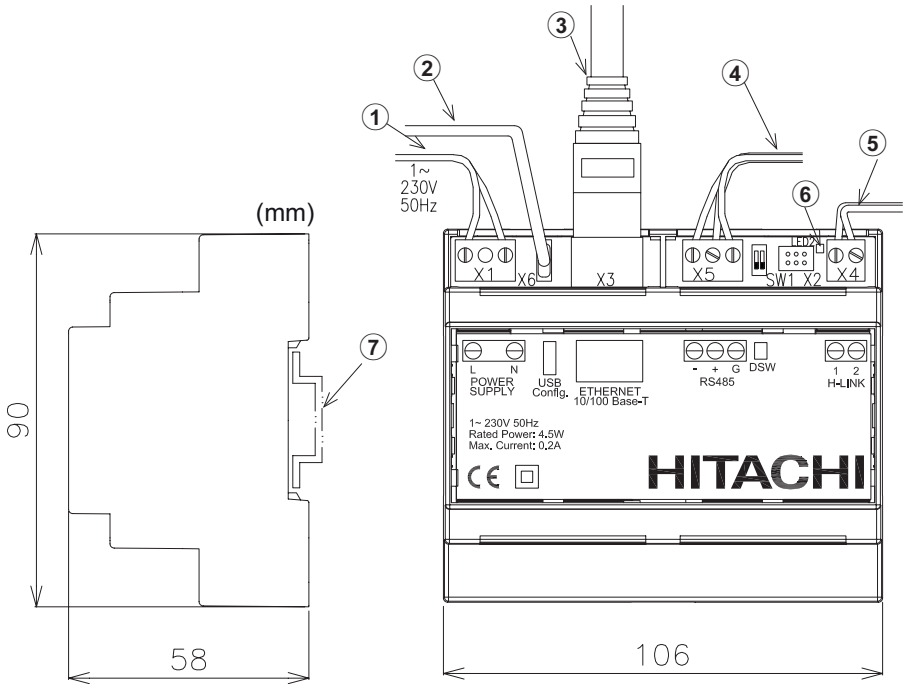

N.º	Descrição
1	Fonte de alimentação externa
2	Cabo USB somente para configuração
3	RJ45 Ethernet HC-A(8/16/64)MB: Modbus TCP HC-A64NET : TCP/IP
4	RS485 Modbus RTU para HC-A(8/16/64)MB Não disponível para HC-A64NET
5	Bus de comunicação H-LINK com unidades Hitachi
6	Indicador LED de funcionamento
7	Calha DIN 35 mm para montagem no interior da caixa elétrica

3.5 ESPAÇO DE INSTALAÇÃO

Mantenha livre a zona cinzenta para um funcionamento correto do dispositivo.

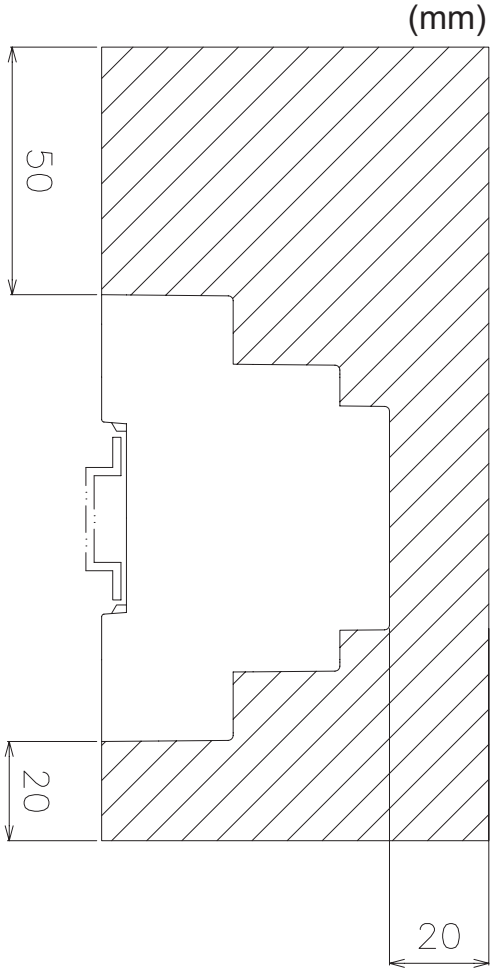

3.6 PROCEDIMENTO DE INSTALAÇÃO

⚠ PERIGO

- ***Não instale este dispositivo em locais acessíveis ao público em geral. Instale-o em recintos ou outros locais acessíveis unicamente mediante a utilização de uma ferramenta.***
- ***Não ligue a fonte de alimentação antes de uma instalação correta do dispositivo. Desligue sempre a fonte de alimentação do dispositivo antes de qualquer ação de manutenção ou reparação.***

⚠ CUIDADO

- *Certifique-se de que os componentes elétricos fornecidos no local (interruptores de alimentação da rede, disjuntores, cabos, conectores e terminais de cabos) foram selecionados corretamente de acordo com os dados elétricos indicados neste documento e de que cumprem as regulamentações locais e nacionais.*
- *Ao ligar os gateways de rede/Modbus, qualquer unidade que não esteja ligada não será reconhecida e terá que ser configurada posteriormente.*
  - *Antes de ligar a alimentação elétrica dos gateways de rede / Modbus, deve certificar-se de que:*
    - *1. Todos os circuitos estão ligados corretamente.*
    - *2. Todas as ligações do H-Link estão configuradas.*
    - *3. A ligação Modbus foi realizada corretamente.*
- *Os cabos de sinais devem ser o mais curtos possível. Certifique-se de que os cabos ficam instalados a uma distância maior que 150 mm em relação aos cabos de alimentação. Não os monte juntos (embora possam existir intersecções). Se for necessário instalá-los juntos, tome as seguintes medidas para evitar ruído:*
  - *Para as comunicações, utilize cabo blindado com uma das extremidades ligada à terra.*

3.7 CONFIGURAÇÃO DE REDE

É fornecida uma ferramenta de software informática, “Net Configuration Tool”, na memória USB para uma configuração fácil e intuitiva.

3.7.1 Requisitos do computador

É necessário usar um computador pessoal com Microsoft Windows 7 ou superior, uma porta USB livre e Java.

3.7.2 Parâmetros em configuração:

- *Paridade: Ímpar/Par/Desativado*
- *Velocidade de comunicação: 9600/19200 bps*
- *Endereço de Modbus*
- *Modbus TCP IP*

3.7.3 Procedimento de configuração

◆ Configuração através de porta USB

Este método é necessário quando não se conhece o dispositivo IP.

1. Ligue o dispositivo de rede a um computador através de um cabo USB (não fornecido, mas disponível com o jogo de configuração da rede)
2. Selecione a porta de comunicação do computador.
3. Carregue no botão do ecrã

PORTUGUÊS

◆ Configuração através de porta Ethernet

1 Ligue o dispositivo de rede a um computador através de um cabo Ethernet (não fornecido, mas disponível com o jogo de configuração da rede ou também com o CSNET MANAGER)

2 Introduza os seguintes parâmetros:

- Endereço IP: 192.168.0.4
- Porta: Modbus Gateway/ HC-A64NET

3 Carregue no botão do ecrã

◆ Configuração de dispositivo e de comunicação

HC-A(8/16/64)MB

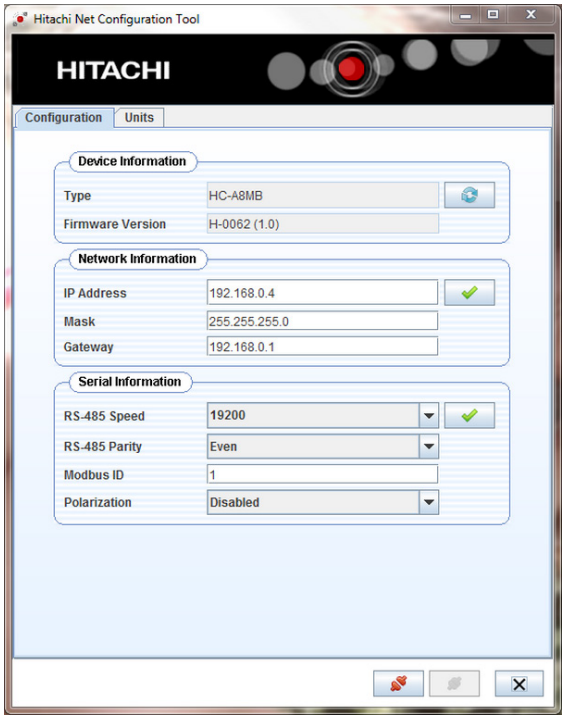

HC-A64NET

“Informação de Dispositivo”

Certifique-se de que o dispositivo de rede é apresentado corretamente no quadro “Informação de Dispositivo”. Carregue no botão atualizar, se for necessário.

“Informação de Rede”

Quando o dispositivo de rede estiver integrado na rede LAN / Modbus por Ethernet, configure os seguintes parâmetros:

- Endereço IP: permite modificar o IP da porta do dispositivo de rede (“192.168.0.4” por defeito).
- Mask: Pergunte ao seu técnico informático o valor correto (“255.255.255.0” por defeito).
- Gateway: Endereço de gateway LAN (“192.168.0.1” por defeito)

“Informação de Série”

Quando o dispositivo de rede estiver integrado na rede Modbus através da porta RS485, configure os seguintes parâmetros:

- RS485: 9600 / 19200 bps (“19200” bps por defeito)
- RS485: Paridade None / Ímpar / par (“par” por defeito)
- ID Modbus: 1~128 (“1” por defeito)
- Polarização: Polarização da comunicação (“Desativado” por defeito)

NOTA

Esta parte não está disponível para o HC-A64NET

“Configuração ID Unidades”

- Endereços automáticos ao carregar em
- A configuração manual dos endereços pode ser feita atribuindo cada ID a um endereço H-LINK específico.
  - *Endereço da unidade exterior (Ou) e endereço da unidade interior (Iu)*

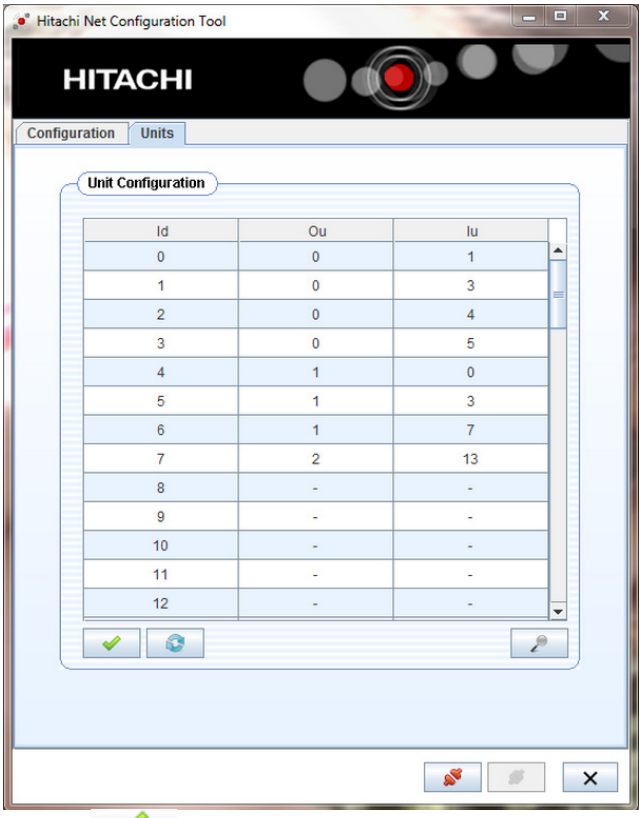

Id	Ou	Iu
0	0	1
1	0	3
2	0	4
3	0	5
4	1	0
5	1	3
6	1	7
7	2	13
8	-	-
9	-	-
10	-	-
11	-	-
12	-	-

- Confirme a configuração carregando em
- Carregue no botão de atualizar ao modificar as unidades ligadas à rede

NOTA

Esta parte não está disponível para o HC-A64NET

PORTUGUÊS

4 LIGAÇÕES ELÉTRICAS

Nome	Ligação	Especificações de cabo
X1	Fonte de alimentação (1)	Utilize cabos de 0,75 mm2 que não sejam mais leves que o cabo flexível com revestimento de policloropreno (designação de código 60245 IEC 57).
X3	Ethernet (1)	Cabos de LAN da categoria 5 ou superior Ligação ao PC: Utilize um cabo cruzado (um conjunto de cabo disponível no jogo de configuração da rede) para uma ligação direta. Ligação LAN: Utilize um cabo direto (fornecido no local) para a ligação a um distribuidor comercial (Hub).
X4	H-LINK (1)	Cabo torcido blindado com dois condutores de 0,75 mm².A blindagem deve estar ligada à terra numa das extremidades.
X5	RS485 (1)	Cabo com bainha e 3 núcleos de 0,75 mm² ligada à terra numa das extremidades.. Os isolamentos dos condutores devem ter cores diferentes.
X6	USB (1)	Utilize um cabo de ficha USB Mini-B (um conjunto de cabo disponível no jogo de configuração da rede).

NOTA

(1) Estes cabos são fornecidos no local.

4.1 CONFIGURAÇÃO DE DSW

Nome	Função	Ajuste de fábrica	Descrição
SW1	Configuração	ON 1 2	SW1-1: Resistência final de Modbus (*). SW1-2: Sem utilização (manter sempre “ON”)

NOTA

(*) Não aplicável a HC-A64NET.

5 FUNCIONAMENTO

5.1 COMPATIBILIDADE

Estes dispositivos não são compatíveis com nenhum dos seguintes controladores Hitachi:

- *Controlos remotos centralizados*
- *Controlos de ar condicionado de edifícios (*)*
- *Outros gateways BMS da Hitachi (LONWORKS, BACNET, KNX, FIDELIO)*
- *Outros gateways MODBUS da Hitachi*
- *Outras unidades do mesmo modelo*

NOTA

(*) HC-A64NET é compatível com CSNET Manager.

5.2 UNIDADES INTERIORES

5.2.1 Dados disponíveis para HC-A(8/16/64)MB

Offset (1)	Nome	Descrição	Valores	Leitura/Gravação
0	EXIST	Existe	0: Não existe 1: Existe	Leitura
1	SYSTEM_ADDRESS	Endereço de sistema	0~63	Leitura
2	UNIT_ADDRESS	Endereço de unidade		
3	SET_ONOFF	Ordem de ajuste Lig./Des.	0: Desligar 1: Ligar	Leitura/Gravação
4	SET_MODE	Ordem do modo de ajuste	0: Frio 1: Desumidificação 2: Ventilação 3: Calor 4: Automático	Leitura/Gravação
5	SET_FAN	Ordem de ajuste do ventilador	0: Baixa 1: Média 2: Alta 3: High2 4: Automático	Leitura/Gravação
6	SET_TSET	Ajuste de temperatura	ºC (Configurar de acordo com a escala de trabalho da unidade)	Leitura/Gravação
7	SET_LOUVER	Ajuste do defletor	0~7 (7 corresponde a Automático)	Leitura/Gravação
8	SET_CENTRAL	Ajuste central (3)	Bit 0: On/Off (pode sempre ser parado) Bit 1: Modo Bit 2: Ajuste de temperatura Bit 3: Ventilação Bit 4: defletor	Leitura/Gravação
9	READ_ONOFF	Estado On/Off	0: Off 1: On	Leitura
10	READ_MODE	Estado de modo	0: Frio 1: Desumidificação 2: Ventilação 3: Calor 4: Automático	Leitura
11	READ_FAN	Estado do ventilador	0: Baixa 1: Média 2: Alta 3: High2 4: Automático	Leitura
12	READ_TSET	Estado de ajuste da temperatura	ºC (Configurar de acordo com a escala de trabalho da unidade)	Leitura
13	READ_LOUVER	Estado do defletor	0~7 (7 corresponde a Automático)	Leitura
14	(não utilizado)	(não utilizado)	(não utilizado)	(não utilizado)
15	TIN	Leitura da temperatura de entrada (2)	-63ºC ~ 63ºC	Leitura
16	TOUT	Leitura da temperatura de saída (2)	-63ºC ~ 63ºC	Leitura
17	TGAS	Leitura da temperatura do tubo de gás (2)	-63ºC ~ 63ºC	Leitura
18	TLIQUID	Leitura da temperatura do tubo de líquido (2)	-63ºC ~ 63ºC	Leitura
19	ERROR_CODE	Código de alarme	Unidade de alarme a partir de 7 segmentos	Leitura
20	STOP_CAUSE	Causa de paragem do compressor	(Leia o manual de assistência da unidade)	Leitura

PORTUGUÊS

Offset (1)	Nome	Descrição	Valores	Leitura/Gravação
21	VALVE_OPEN	Abertura da válvula de expansão da unidade interior	0~100	(não utilizado)
22	OPER_CONDITION	Condição de funcionamento da unidade	0: OFF 1: Thermo OFF 2: Thermo ON 3: Alarme	Leitura
23	(não utilizado)	(não utilizado)	(não utilizado)	(não utilizado)
24	AMBIENT TEMPERATURE	Temperatura ambiente (2)	-63ºC ~ 63ºC	Leitura
25	RCS_TEM	Temperatura do controlo remoto (apenas quando disponível na unidade) (2)	-63ºC ~ 63ºC	Leitura
26	RCS_CONFIG	Configuração do switch de controle remoto	b0: 0 Mestre / 1 Escravo b1: 0 com controlo remoto / 1 sem controlo remoto	Leitura/Gravação
27	RCS_GROUP	Grupo interruptor de controle remoto	0: Nenhum grupo 1~255	Leitura/Gravação
26~30	(não utilizado)	(não utilizado)	(não utilizado)	(não utilizado)
31	REM_TEM	Temperatura do sensor remoto (2)	-63ºC ~ 63ºC	Leitura

NOTA

- *(1) O endereço de registo é calculado como: "N + (Endereço *32) + Offset" em que:*
- *N: A posição da tabela de dados é 2000, a posição 20000 também está disponível para manter a compatibilidade com o gateway Modbus antigo.*
- *Endereço: Endereço da unidade interior configurado pelo software.*
- *(2) Estes números referem-se a valores de 16 bits como sinal, usando um formato de complemento para dois nos valores negativos.*
- *(3) O Bit 0 (on/off) e o Bit 4 (defletor) apenas podem ser selecionados quando todas as centrais estiverem ativadas.*
- *Para bloquear completamente o ajuste do controlo remoto (central mostrada em controlo remoto), ajuste este registo em 31.*

5.2.2 Dados disponíveis para HC-A(16/64)MB

Offset	Descrição	Valores	Leitura/Gravação	Availability		
				VRF	RAC	ATW
0	Existe	0: No exist	Leitura	O	O	
		1: Exist				
1	Endereço de sistema	H-LINK 1: 0~15	Leitura	O	O	
2	Endereço de unidade	H-LINK 2: 0~63		O	O	
3	Tipo	0: Indoor Unit	Leitura	O	O	
4	Ordem de ajuste On/Off	0: Stop	Leitura/Gravação	O	O	
		1: Run				
5	Ordem do modo de ajuste	0: Cool	Leitura/Gravação	O	O	
		1: Dry				
		2: Fan				
		3: Heat				
		4: Auto				
6	Ordem de ajuste do ventilador	0: Low	Leitura/Gravação	O	O	
		1: Medium				
		2: High				
		3: High2				
		4: Auto				
7	Temperatura de ajuste	ºC (set according to the unit working range)	Leitura/Gravação	O	O	
8	Temperature setting with 0.5°C intervals	ºC x 10 (19.5ºC read as 195)	Leitura/Gravação	O		
9	Heating temperature setting for AUTO Cool/Heat	°C	Leitura/Gravação	O		
10	Heating Temperature setting for AUTO Cool/heat with 0.5°C intervals	ºC x 10 (19.5ºC read as 195)	Leitura/Gravação	O		
11	Cooling Temperature setting for AUTO Cool/heat	°C	Leitura/Gravação	O		
12	Cooling Temperature setting for AUTO Cool/heat with 0.5°C intervals	ºC x 10 (19.5ºC read as 195)	Leitura/Gravação	O		
13	Ajuste do defletor	0 ~ 7 (7 is Auto)	Leitura/Gravação	O		
14	Central setting (2)	Bit 0: On/Off (always can be stopped)	Leitura/Gravação	O	O	
		Bit 1: Mode				
		Bit 2: Setting Temp				
		Bit 3: Fan				
		Bit4: Louver				
15	Estado On/Off	0: Off	Leitura	O	O	
		1: On				
16	Estado de modo	0: Cool	Leitura	O	O	
		1: Dry				
		2: Fan				
		3: Heat				
		4: Auto				

PORTUGUÊS

Offset	Descrição	Valores	Leitura/Gravação	Availability		
				VRF	RAC	ATW
17	Estado do ventilador	0: Low 1: Medium 2: High 3: High2 4: Auto	Leitura	O	O	
18	Estado de ajuste da temperatura	ºC (set according to the unit working range)	Leitura	O	O	
19	Temperature setting with 0.5°C intervals status	ºC x10 (19.5ºC read as 195)	Leitura	O		
20	Heating temperature setting for AUTO Cool/Heat status	°C	Leitura	O		
21	Heating Temperature setting for AUTO Cool/heat with 0.5°C intervals status	ºC x 10 (19.5ºC read as 195)	Leitura	O		
22	Cooling Temperature setting for AUTO Cool/heat status	°C	Leitura	O		
23	Cooling Temperature setting for AUTO Cool/heat with 0.5°C intervals status	ºC x 10 (19.5ºC read as 195)	Leitura	O		
24	Estado do defletor	0 ~ 7 (7 is Auto)	Leitura	O		
25	Air inlet temperature reading	-63ºC ~ 63ºC	Leitura	O		
26	Air outlet temperature reading	-63ºC ~ 63ºC	Leitura	O		
27	Gas pipe temperature reading	-63ºC ~ 63ºC	Leitura	O		
28	Liquid pipe temperature reading	-63ºC ~ 63ºC	Leitura	O		
29	Código de alarme	Unidade de alarme a partir de 7 segmentos	Leitura	O	O(1)	
30	Causa de paragem do compressor	(Leia o manual de assistência da unidade)	Leitura	O		
31	Abertura da válvula de expansão da unidade interior	0~100	Leitura	O		
32	Condição de operação da unidade	0: OFF 1: Thermo OFF 2: Thermo ON 3: Alarm	Leitura	O	O	
33	Remote temperature sensor (THM4) value	-63ºC ~ 63ºC	Leitura	O		
34	Remote control switch temperature (only when available in the unit)	-63ºC ~ 63ºC	Leitura	O	O	
35	Remote control switch configuration	b0: 0 Master/1Slave b1: 0 wih RCS/1 Without RCS	Leitura/Gravação	O		
36	Grupo de controlo remoto	0: No group 1~255	Leitura/Gravação	O		
37	CN3 Configuration status	b0: Input 1 open/close b1: Input 2 open/close b2: Enabled/Disabled (Indicates if the unit has CN3 enabled with any function)	Leitura	O		

Offset	Descrição	Valores	Leitura/Gravação	Availability		
				VRF	RAC	ATW
38~49	Reservado					
50	Controlo de unidade Ligar/Parar	0: Stop 1: Run	Leitura/Gravação			O
51	Controlo de unidade de modo	0: Cool 1: Heat	Leitura/Gravação			O
52	Controlo de circuito 1 Ligar/Parar	0: Stop 1: Run	Leitura/Gravação			O
53	Control Heat. OTC Zone 1	0: No 1: Points 2: Gradient 3: Fix	Leitura/Gravação			O
54	Control Cool. OTC 1	0: No 1: Points 2: Fix	Leitura/Gravação			O
55	Control Circuit 1: Water heating Fix Setting Temp	0~80	Leitura/Gravação			O
56	Control Circuit 1: Water cooling Fix Setting Temp	0~80	Leitura/Gravação			O
57	Controlo de circuito 1: Modo ECO	0: ECO 1: Comfort	Leitura/Gravação			O
58	Controlo de circuito 1: Temperatura de compensação ECO de aquecimento	1~10	Leitura/Gravação			O
59	Control Circuit 1: Cool ECO Offset Temperature	1~10	Leitura/Gravação			O
60	Control Circuit 1: External MBS/KNX Thermostat Available	0: Not Available 1: Available	Leitura/Gravação			O
61	Control Zone 1: Thermostat Setting	0~65535	Leitura/Gravação			O
62	Control Zone 1: Room Ambient Temperature	-32667~32667	Leitura/Gravação			O
63	Control Circuit 2 Run/Stop	0: Stop 1: Run	Leitura/Gravação			O
64	Control Heat. OTC Zone 2	0: No 1: Points 2: Gradient 3: Fix	Leitura/Gravação			O
65	Control Cool. OTC Zone 2	0: No 1: Points 2: Fix	Leitura/Gravação			O
66	Control Circuit 2: Water heating Fix Setting Temp	0~80	Leitura/Gravação			O
67	Control Circuit 2: Water cooling Fix Setting Temp	0~80	Leitura/Gravação			O
68	Control Circuit 2: Eco mode	0: ECO 1: Comfort	Leitura/Gravação			O
69	Control Circuit 2: Heat ECO Offset Temperature	1~10	Leitura/Gravação			O

Offset	Descrição	Valores	Leitura/Gravação	Availability		
				VRF	RAC	ATW
70	Control Circuit 2: Cool ECO Offset Temperature	1~10	Leitura/Gravação			O
71	Control Circuit 2: External MBS/KNX Thermostat Available	0: Not Available 1: Available	Leitura/Gravação			O
72	Control Zone 2: Thermostat Setting	0~65535	Leitura/Gravação			O
73	Control Zone 2: Room Ambient Temperature	-32667~32667	Leitura/Gravação			O
74	Controlo de depósito de DHW Ligar/ Parar	0: Stop 1: Run	Leitura/Gravação			O
75	Controlo de temperatura de ajuste para depósito de DHW	0~80	Leitura/Gravação			O
76	Controlo do impulso de DHW	0: No request 1: Request	Leitura/Gravação			O
77	Reservado					
78	Controlo do modo de consumo de DHW	0: Standard 1: High demand	Leitura/Gravação			O
79	Controlo de piscina Ligar/Parar	0: Stop 1: Run	Leitura/Gravação			O
80	Controlo de temperatura de ajuste para piscina	0~80	Leitura/Gravação			O
81	Controlo de antilegionella Ligar/Parar	0: Stop 1: Run	Leitura/Gravação			O
82	Controlo de temperatura de ajuste para antilegionella	0~80	Leitura/Gravação			O
83	Controlo bloqueio/desbloqueio menu	0: No 1: Block (user cannot access the menu)	Leitura/Gravação			O
84	Control Yutaki Forced OFF	0: Normal Operation 1: Forced OFF	Leitura/Gravação			O
85	Space Heating Heater Forced OFF	0: Normal Operation 1: Heater Forced OFF	Leitura/Gravação			O
86	Controlo erro/alarme	0: No 1: Alarm	Leitura/Gravação			O
87~99	Reservado					
100	Estado unidade Ligar/Parar	0: Stop 1: Run	Leitura			O
101	Status Mode	B0: 0: Cool / 1: Heat B1: 0: Normal / 1: Auto	Leitura			O
102	Estado de circuito 1 Ligar/Parar	0: Stop 1: Run	Leitura			O
103	Status Heat. OTC 1	0: No 1: Points 2: Gradient 3: Fix	Leitura			O

Offset	Descrição	Valores	Leitura/Gravação	Availability		
				VRF	RAC	ATW
104	Status Cool. OTC 1	0: No 1: Points 2: Fix	Leitura			O
105	Status Circuit 1: Water heating Fix Setting Temp	0~80	Leitura			O
106	Status Circuit 1: Water cooling Fix Setting Temp	0~80	Leitura			O
107	Estado Circuito 1: Modo ECO	0: ECO 1: Comfort	Leitura			O
108	Estado Circuito 1: temperatura de compensação ECO de aquecimento	1~10	Leitura			O
109	Status Circuit 1: Cool ECO Offset Temperature	1~10	Leitura			O
110	Estado Circuito 1: Ajuste de temperatura do termóstato	50~350 (5,0~35,0)	Leitura			O
111	Estado Circuito 1: Temperatura ambiente do termóstato	0~1000 (0,0~100,0)	Leitura			O
112	Estado Circuito 1: Ajuste de temperatura Sem Fios	50~350 (5,0~35,0)	Leitura			O
113	Estado Circuito 1: Temperatura ambiente Sem Fios	0~1000 (0,0~100,0)	Leitura			O
114	Status Circuit 2 Run/Stop	0: Stop 1: Run	Leitura			O
115	Estado de zona 2 OTC para aquecimento	0: No 1: Points 2: Gradient 3: Fix	Leitura			O
116	Estado de zona 2 OTC para arrefecimento	0: No 1: Points 2: Fix	Leitura			O
117	Status Circuit 2: Water heating Fix Setting Temp	0~80	Leitura			O
118	Status Circuit 2: Water cooling Fix Setting Temp	0~80	Leitura			O
119	Status Circuit 2: Eco mode	0: ECO 1: Comfort	Leitura			O
120	Estado Circuito 1: temperatura de compensação ECO de aquecimento	1~10	Leitura			O
121	Status Circuit 1: Cool ECO Offset Temperature	1~10	Leitura			O
122	Status Zone 2: Thermostat Setting	50~350 (5,0~35,0)	Leitura			O
123	Status Zone 2: Ambient Temperature	0~1000 (0,0~100,0)	Leitura			O
124	Status Circuit 2: Wireless Setting Temperature	50~350 (5,0~35,0)	Leitura			O
125	Status Circuit 2: Wireless Room temperature	0~1000 (0,0~100,0)	Leitura			O

Offset	Descrição	Valores	Leitura/Gravação	Availability		
				VRF	RAC	ATW
126	Estado de depósito de DHW Ligar/ Parar	0: Stop 1: Run	Leitura			O
127	Estado de temperatura de ajuste para depósito de DHW	0~80	Leitura			O
128	Status DHW Boost	0: Disable 1: Enable	Leitura			O
129	Reservado					
130	Estado do modo de consumo de DHW	0: Standard 1: High demand	Leitura			O
131	Status DHW Temperature	-80~100	Leitura			O
132	Estado de piscina Ligar/Parar	0: Stop 1: Run	Leitura			O
133	Status Swim. Pool Setting Temperature	0~80	Leitura			O
134	Status Swim. Pool Temperature	-80~100	Leitura			O
135	Status AntiLeg. Run/Stop	0: Stop 1: Run	Leitura			O
136	Estado de temperatura de ajuste para antilegionella	0~80	Leitura			O
137	Estado bloqueio/desbloqueio menu	0: No 1: Block	Leitura			O
138	Estado erro/alarme	0: No 1: Alarm	Leitura			O
139	LCD modo central	0: Local 1: Air (Not available for Yutampo) 2:Water (Not available for Yutampo) 3: Full	Leitura			O

Offset	Descrição	Valores	Leitura/Gravação	Availability		
				VRF	RAC	ATW
140	Configuração do sistema	b0: Zone 1 Heating Available	Leitura			O
		b1: Zone 2 Heating Available				
		b2: Zone 1 Cooling Available				
		b3: Zone 2 Cooling Available				
		b4: DHWT Available				
		b5: SWP Available				
		b6: Room thermostat available Zone 1				
		b7: Room thermostat available Zone 2				
		b8: Wireless Setting C1				
		b9: Wireless Setting C2				
		b10: Wireless Room Temperature C1				
		b11: Wireless Room Temperature C2				
		b12: Slave Unit				
141	Estado de funcionamento	0: OFF	Leitura			O
		1: Cool Demand –OFF				
		2: Cool Thermo-OFF				
		3: Cool Thermo-ON				
		4: Heat Demand-OFF				
		5: Heat Thermo-OFF				
		6: Heat Thermo-ON				
		7: DHW-OFF				
		8: DHW-ON				
		9: SWP-OFF				
		10: SWP-ON				
		11: Alarm				
142	Tº ambiente exterior (Outdoor ambient temperature)	-80~100	Leitura			O
143	Tº entrada de água (Water Inlet unit temperature)	-80~100	Leitura			O
144	Tº saída de água (Water outlet unit temperature)	-80~100	Leitura			O
145	H-Link Communication State	0: No alarm	Leitura			O
		1: There is no communication with RCS or Yutaki unit during more than 180 seconds				
		2: Data initialization				
146	Software PCB		Leitura			O

PORTUGUÊS

Offset	Descrição	Valores	Leitura/Gravação	Availability		
				VRF	RAC	ATW
147	Software LCD		Leitura			O
148	Potência da unidade		Leitura			O
149	Unit Power Consumption		Leitura			O
150	Water Outler HP (TwoHP)	0~100 Apenas para YUTAKI S e S Combi	Leitura			O
151	Ta1av: Outdoor Unit Ambient Average Temperature	-80~100	Leitura			O
152	Ta2: Second Ambient Temperature (inst)	-80~100	Leitura			O
153	Ta2av: Second Ambient Temperature (avg)	-80~100				O
154	O2: Water outlet Temp 2 (Two2)	-80~100	Leitura			O
155	O3: Water outlet Temp 3 (Two3)	-80~100	Leitura			O
156	Tg: Gas Temperature (THMg)	-80~100	Leitura			O
157	Tl: Liquid Temperature (THMl)	-80~100	Leitura			O
158	EVI: Indoor expansion valve openning	0~100	Leitura			O
159	CD: Capacity Data		Leitura			O
160	Mixing Valve Opening	0~100	Leitura			O
161	Descongelação	0: No defrosting	Leitura			O
		1: Defrosting				
162	Modelo de unidade	0: Yutaki S	Leitura			O
		1: Yutaki SC				
		2: Yutaki S80				
		3: Yutaki M				
		4: Yutaki SC Lite (New)				
		5: Yutampo (New)				
		6: YCC (New)				
163	Th: Water Temp Setting (Ttwo)	-80~100	Leitura			O
164	Caudal de água	Water Flow [0.1m3/h]	Leitura			O
165	Pump Speed	0~100	Leitura			O
166	Estado de sistema 2	Bit 0: Defrost	Leitura			O
		Bit 1: Solar				
		Bit 2: Water Pump 1				
		Bit 3: Water Pump 2				
		Bit 4: Water Pump 3				
		Bit 5: Compressor ON				
		Bit 6: Boiler ON				
		Bit 7: DHW Heater				
		Bit 8: Space Heater				
		Bit 9: Smart function input enabled				
		Bit10: Forced OFF				
		Bit11: DHW recirculation Pump State				
		Bit12: Solar Pump Output State				

Offset	Descrição	Valores	Leitura/Gravação	Availability		
				VRF	RAC	ATW
167	Número de alarme	0: Alarm XXX: Alarm number	Leitura			O
168	Temperatura de descarga R134a		Leitura			O
169	Temperatura de aspiração R134a		Leitura			O
170	Pressão de descarga R134a		Leitura			O
171	Pressão de aspiração R134a		Leitura			O
172	Frequência do compressor R134a		Leitura			O
173	Abertura da válvula de expansão interior R134a		Leitura			O
174	Valor atual de compressor R134a		Leitura			O
175	Código de nova tentativa R134a		Leitura			O
176	R134 Te SH		Leitura			O
177	R134 Secondary Current		Leitura			O
178	R134 Stop Code		Leitura			O
179~ 189	Reservado					
190	YCC - Enabled Units	0~8	Leitura			O
191	YCC - Working Units	0~8	Leitura			O
192	YCC - Required Units	0~8	Leitura			O

NOTE

- *Register address is calculated as: 5000+(Modbus_Id*200)+offset*
- *Modbus_Id as configured by configuration software*
- *For VRF / Package units, only the relevant data are available (heating units registers will not give any value). The situation is the same for heating units (registers related to air/air units will not give any value).*
- *Availability:*
  - PAC: VRF and package units.
  - RAC: Domestic units connected to the H-link via PSC-6RAD or SPX-RAMHLK
  - ATW: Air to water units.
- *(1) Take into account only if it is different from zero.*
- *(2) Bit 0 (ON/OFF) and Bit 4 (Louver) selectable only when all centrals are actived.*
- *In order to full lock setting from RCS (Central shown in RCS) set this register to 31*

5.3 UNIDADES EXTERIORES

Some state registers about outdoor unit have been added. Using these registers it is now possible to know the status of the refrigerant cycle. Some control registers have also been added.

Offset	Descrição	Valores	Leitura/Gravação
0	Temperatura do ar exterior	-63ºC ~ 63ºC	Leitura
1	Compressor Discharge Temperature	0 ~ 200 ºC	Leitura
2	Heating Evaporating Temperature		Leitura
3	Number of operating Compressor		Leitura
4	Pressão de descarga	0.0 ~ 5.0 MPa (0.1 MPa)	Leitura
5	Pressão de aspiração	-0.2 ~2.0MPa (0.1 MPa or 0.01MPa depending unit)	Leitura
6	Total Current	0 ~ 255 A	Leitura
7	Total Real Frequency	0 ~ 255 Hz	Leitura
8	EVO1	0 ~ 100 %	Leitura
9	EVO2 / Hot Bypass	0 ~ 100 %	Leitura
10	EVB	0 ~ 100 %	Leitura
11	Outdoor Unit Option Enabled	0: Disable	Leitura/Gravação
		1: Enable (it's possible to use the following options, also if the value of register 16 "Power Level Set" is 1)	
12	Noise Control Enabled	0: Disable	Leitura/Gravação
		1: Enable (it's possible to send the noise level)	
13	Noise Control Level Set	0~9 (See the service manual of Outdoor unit, function db)	Leitura/Gravação
14	Power Control Enabled	0: Disable	Leitura/Gravação
		1: Enable (it's possible to send the power level)	
15	Power Level	0~100%	Leitura/Gravação
16	Power Level Set	0~100%	Leitura
17	Power Level Current Value	0~100%	Leitura
18	Power Control Possible	0: Not possible	Leitura
		1: Possible	

NOTE

- *Register address is calculated as: 5000+(Modbus_Id*200)+offset*
- *Modbus_Id as configured by configuration software*

5.4 FUNÇÕES OPCIONAIS

Some optional functions of the indoor units have been added so that they can be managed from the BMS.

Offset	Descrição	Valores	Leitura/Gravação
0	b1 (Heating temperature compensation)	0~4	Leitura/Gravação
1	b2 (Circulation function at heating Thermo-OFF)	0~1	Leitura/Gravação
2	b4 (Change of filter cleaning period)	0~4	Leitura/Gravação
3	c5 (Static pressure selection)	0~2	Leitura/Gravação
4	c8 (Control by the temperature sensor of the remote control switch)	0~2	Leitura/Gravação
5	Cb (Selection of forced stoppage logic)	0~1	Leitura/Gravação
6	Cd (Stop of indoor unit fan during cooling Thermo-OFF conditions)	0~1	Leitura/Gravação
7	CE (Stop of indoor unit fan during heating Thermo-OFF conditions)	0~1	Leitura/Gravação
8	d1 (Management of indoor unit operation after a power supply cut off -option 1)	0~1	Leitura/Gravação
9	d3 (Management of indoor unit operation after a power supply cut off -option 2)	0~1	Leitura/Gravação
10	d4 (RPI(M) Prevention of low air outlet temperature in cooling mode)	0~1	Leitura/Gravação
11	d5 (Prevention of low air outlet temperature in heating mode)	0~1	Leitura/Gravação
12	E1 (KPI: Ventilation mode / Econofresh cooling mode)	0~2	Leitura/Gravação
13	E2 (KPI: Increase of air supply volume / Econofresh enthalpy Sensor)	0~1	Leitura/Gravação
14	E4 (KPI: Pre-cooling / preheating period / Econofresh: CO2 sensor)	0~2	Leitura/Gravação
15	E8 (Control for stop of the indoor unit fan during heating Thermo-OFF conditions (with remote sensor THM-R2AE connected to the THM4 connector in the indoor unit PCB)	0~1	Leitura/Gravação
16	E9 (Intermittent fan operation in heating stop)	0~1	Leitura/Gravação
17	Eb (Indoor unit fan control during cooling Thermo-OFF conditions)	0~2	Leitura/Gravação
18	EE (Control in “Automatic” indoor fan speed mode)	0~1	Leitura/Gravação
19	EF (Control in “Automatic” indoor fan speed mode (supporting High H))	0~1	Leitura/Gravação
20	H4 (KPI: Operation modes for the ventilation unit with energy recovery)	0~1	Leitura/Gravação
21	K5 (Detection level of the motion sensor kit)	0~2	Leitura/Gravação
22	K6 (Selection of allowed operation modes when the control sensor of the indoor unit is set by C8 function)	0~3	Leitura/Gravação

NOTE

- *Register address is calculated as: 40000+(Modbus_Id*100)+offset*
- *Modbus_Id as configured by configuration software*

5.5 LISTA DE CÓDIGOS DE ALARME

O endereço 19 indica o código de alarme mostrado na unidade interior. Consulte o manual de manutenção para obter uma explicação do alarme e o procedimento de reparação em caso de alarme na unidade interior ou unidade exterior.

5.6 RESOLUÇÃO DE PROBLEMAS

CÓDIGO DE ALARME	DESCRIÇÃO	CONTRAMEDIDA
O LED2 está a piscar	Funcionamento anómalo	Ligue a fonte de alimentação do dispositivo e volte a ligá-la passados cinco segundos. Se o LED2 continuar a piscar, contacte o serviço de apoio ao cliente da Hitachi

6 JOGO DE CONFIGURAÇÃO DA REDE

Este acessório proporciona todos os cabos necessários para os instaladores Hitachi quando realizam uma instalação de Modbus.

Lista de componentes:

Cabo USB		Cabo de Ethernet cruzado		Memória USB	
1x		1x		1x	

A Memória USB inclui um software para verificar a comunicação Modbus durante a entrada em serviço.

O cabo USB somente é necessário para configurar o dispositivo (parâmetros de rede).

O cabo de Ethernet é fornecido para uma ligação rápida com um portátil para a verificação da comunicação Modbus.

1 PRODUKTVEJLEDNING

1.1 KLASSIFIKATIONER AF ENHEDER

Kontrol af grænseflade til styreenhed	Mellemrum	H-LINK II kompatibel	Maksimalt antal styrbare enheder (8/16/64)	MB: Modbus gateway NET: Gateway til CSNET Manager
HC	-	A	X	X

1.2 MODELLER

BESKRIVELSE
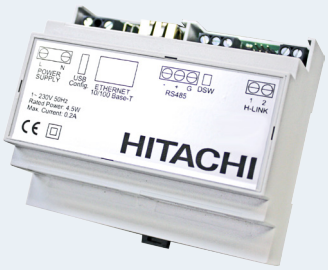
HC-A8MB
HC-A16MB
HC-A64MB
HC-A64NET

1.3 LISTE MED TILBEHØRS

BESKRIVELSE
Netkonfigurationssæt

DANSK

2 GENERELLE DATA OM DET NYE PRODUKT

2.3.1 Hardwarespecifikationer

Element	Specifikationer
Strømforsyning	1~ 230 V ±10% 50 Hz
Forbrug	4,5 w (maks.)
Ydre mål	Bredde: 106 mm, dybde: 90 mm, højde: 58 mm
Vægt	165 g
Monteringsforhold	Indendørs (montering i et aflukke med begrænset adgang vha. værktø)
Omgivelsestemperatur	0~60 ºC
Fugtighed	20~85% (uden kondensdannelse)

2.3.2 Kommunikation

◆ RS485

Element	Specifikationer
Type	Modbus RTU til HC-A(8/16/64)MB
	Ikke disponibel til HC-A64NET
Stik	Seriel udgang RS485 (3 skrueklemmer)
Kommunikationslinje	Afskærmet parsnoet kabel, med tredje ledning (til den fælles), med polaritet.
Kommunikationssystem	Halv duplex. multipunkt seriel forbindelse
Kommunikationsmetode	Ikke-paritet eller ulige/lige paritetsvalg. Datalængde: 8 bit - 1 stop bit
Baudhastighed	19200/9600 Baud
Længde	Maks. 1200 m i henhold til EIA-485

◆ Ethernet

Element	Specifikationer
Type	Modbus TCP til HC-A(8/16/64)MB
	TCP/IP kommunikation til HC-A64NET
Stik	Ethernet (RJ45)
Kommunikationslinje	To parsnoet kabel CAT5 eller bedre (T-568A/T-568B)
Kommunikationssystem	Fuld-dupleks
Længde	Maks. 100 m i henhold til IEEE 802.3

◆ H-LINK

Element	Specifikationer
Kommunikation med	HC-A(16/64)MB: SET FREE, UTOPIA, CENTRIFUGAL og HEATING-systemer
	HC-A8MB og HC-A64NET: INDSTIL GRATIS, UTOPIA og CENTRIFUGAL-systemer
Kommunikationslinje	Afskærmet parsnoet kabel, ikke polær
Kommunikationssystem	Halv dupleks
Kommunikationsmetode	Asynkron
Transmissionshastighed	9600 baud
Ledningslængde	Maks. 1000 m (samlet længde på HLINK I/O-skinne)
Maksimalt antal gateways	1 Gateway (HC-A(8/16/64)MB)/H-LINK SYSTEM
Maksimalt antal IU	HC-A64MB → op til 64 * indendørsenheder
	HC-A16MB → op til 16 * indendørsenheder
	HC-A8MB → op til 8 * indendørsenheder
	HC-A64NET → op til 64* indendørsenheder

3 MONTERING

3.1 OVERSIGT OVER SIKKERHED

FARE

- ***Læs denne vejledning grundigt før udførelse af monteringsarbejdet.***
- ***Denne anordning må ikke monteres på steder, som er offentligt tilgængelige. Monter den i stedet inden i et el-skab, som kun kan åbnes ved hjælp af et stykke værktøj, og som beskytter imod eventuelle elektromagnetiske forstyrrelser.***
- ***Tilslut ikke strømforsyning, før installationen af enheden er udført korrekt. Afbryd altid strømforsyningen til enheden, inden al vedligeholdelsesarbejde og servicering.***

FORSIGTIG!

- *Dette apparat må kun bruges af voksne og kompetente personer, der har modtaget den tekniske information eller instruktioner i korrekt og sikker håndtering af dette apparat.*
- *Dette er et Klasse A-produkt. I en privatbolig kan dette produkt forårsage radiointerferens, hvilket kan kræve, at brugeren træffer passende foranstaltninger.*
- *Børn bør holdes under opsyn, så de ikke leger med apparatet.*
- *Kontrollér, at de elektriske komponenter, der leveres på stedet, (hovedkontakter, kredsløbsafbrydere, ledninger, forbindelsesstik, og ledningsklemmer) er valgt ud fra de angivne elektriske data, der er angivet i dette dokument, samt at de overholder nationale og lokale regler. Om nødvendigt, skal du kontakte de lokale myndigheder vedrørende standarder, regler, bestemmelser osv.*
- *Monter ikke Network / Modbus gateways de følgende steder:*
  - *hvor der er damp, olie eller spildte væsker, som kan påvirke enheden.*
  - *hvor der er konstateret akkumulering, dannelse eller lækager af brandbare gasser.*
  - *i nærheden af varmekiler eller elektromagnetiske støjkilder.*
  - *der ligger i nærheden af havet, i saltholdige, sure eller basiske omgivelser.*

3.2 KOMPONENTER LEVERET FRA FABRIKKEN

Gateway-enhed		Brugsanvisning		USB-stik	
1x	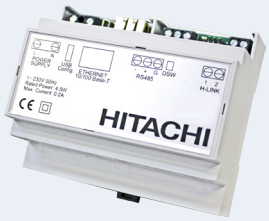	1x		1x	

3.3 MÅL

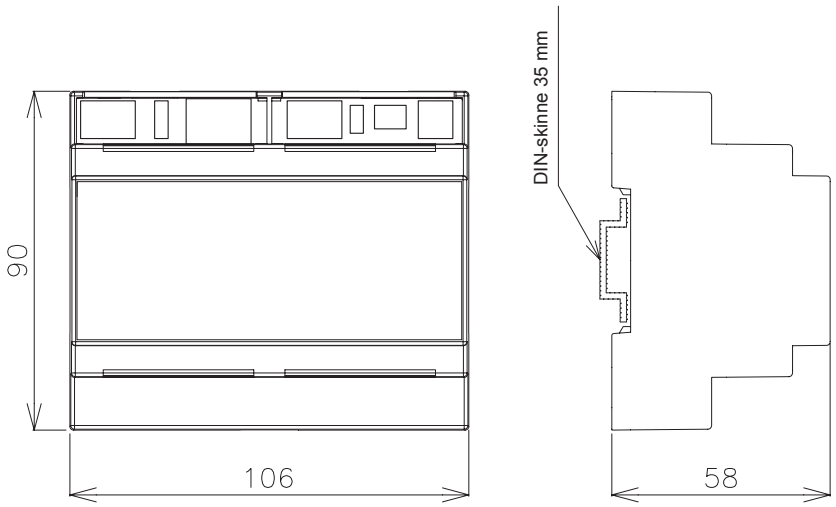

DANSK

3.4 BESKRIVELSE AF DELENE

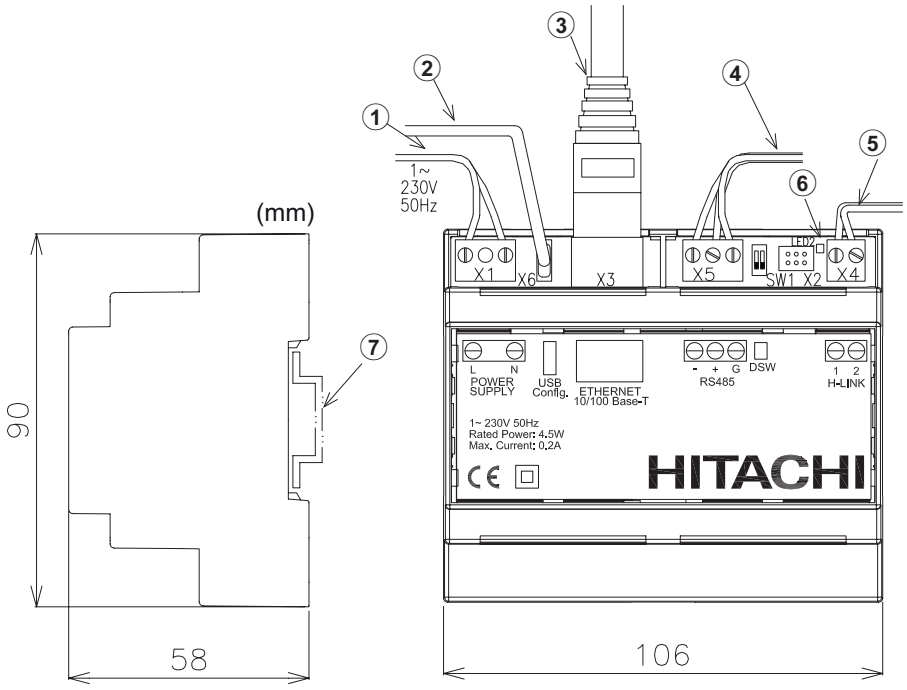

Nr.	Beskrivelse
1	Ekstern strømforsyning
2	USB-kabel kun under konfiguration
3	RJ45 Ethernet HC-A(8/16/64)MB: Modbus TCP HC-A64NET : TCP/IP
4	RS485 Modbus RTU til HC-A(8/16/64)MB Ikke disponibel til HC-A64NET
5	H-LINK Kommunicationsbus med Hitachi-enhder
6	LED-indikator for drift
7	DIN-skinne 35 mm til samling inden i elboksen

3.5 MONTERINGSAFSTAND

Hold det grå område frit for at sikre, at enheden fungerer korrekt.

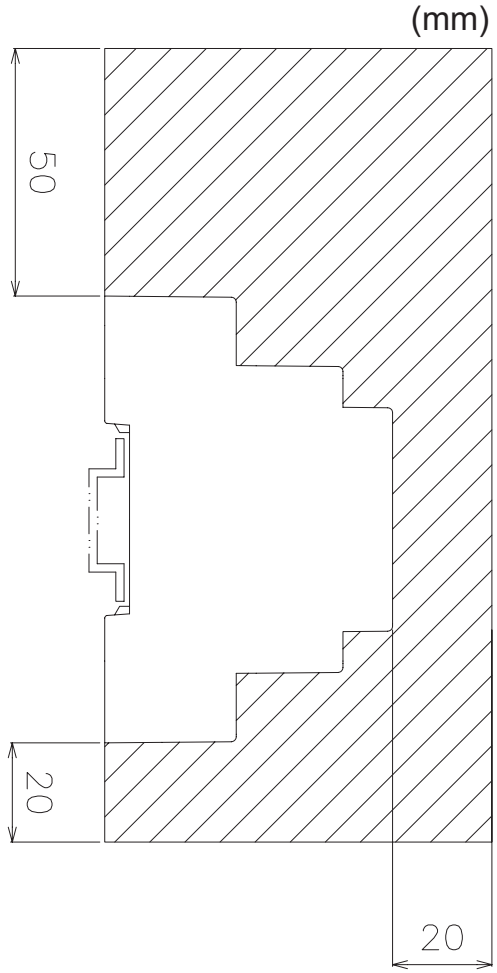

3.6 FREMGANGSMÅDE FOR MONTERING

FARE

- ***Montér ikke denne enhed på steder, hvor den er offentligt tilgængeligt. Montér den i et aflukke eller andre steder, som kun kan tilgås ved hjælp af et stykke værktøj.***
- ***Tilslut ikke strømforsyning, før installationen af enheden er udført korrekt. Afbryd altid strømforsyningen til enheden, inden al vedligeholdelsesarbejde og servicering.***

FORSIGTIG!

- *Kontrollér, at de elektriske komponenter, der leveres på stedet, (hovedkontakter, kredsløbsafbrydere, ledninger, forbindelsesstik, og ledningsklemmer) er valgt ud fra de angivne elektriske data, der er angivet i dette dokument, samt at de overholder nationale og lokale regler.*
- *Alle enheder, der ikke er tilsluttet eller ikke har strømtilførsel, når Network / Modbus slås til, vil ikke blive registreret og skal konfigureres senere.*
  - *Inden strømforsyningen tilsluttes og der tændes for Network / Modbus gateways, skal du sikre dig, at:*
    - *1. Alle de nødvendige kredsløb er tilsluttet korrekt.*
    - *2. Alle H-Link-forbindelser er blevet etableret.*
    - *3. Tilslutning af Modbus er udført korrekt.*
- *Signalkablerne bør være så korte som muligt. Hold en afstand på over 150 mm fra andre strømkabler. Installér dem ikke sideløbende (omend de kan krydse hinanden). Hvis de nødvendigvis må installeres sideløbende, skal følgende forholdsregler tages for at undgå forstyrrende støj:*
  - *Til kommunikation anvendes et afskærmet kabel, der er forbundet til jord i den ene side.*

3.7 NETVÆRKSKONFIGURATION

Der medfølger et computersoftwareværktøj, netkonfigurationsværktøj, på USB-stikket, som sikrer nem og brugervenlig konfiguration.

3.7.1 Krav til computer

Der skal bruges en pc med Microsoft Windows 7 eller højere, en ledig USB-port og Java.

3.7.2 Parametre under konfiguration:

- *Paritet: Ulige/lige/deaktiveret*
- *Kommunikationshastighed: 9600/19200 Bps*
- *Modbus-adresse*
- *Modbus TCP IP*

3.7.3 Fremgangsmåde for konfiguration

◆ Konfiguration via USB-port

Denne metode skal anvendes, når enhedens IP er ukendt.

1. Slut netværkskablet til en computer via et USB-kabel (felt leveret eller tilgængelige med i netkonfigurationssættet)
2. Vælg computerens kommunikationsport.
3. Tryk på -knappen på skærmen.

DANSK

◆ Konfiguration via Ethernet-port

1 Slut netværkskablet til en computer via et Ethernet-kabel (felt leveret eller tilgængelige med i netkonfigurationssættet eller med i CSNET MANAGER).

2 Indtast følgende parametre:

- IP-adresse: 192.168.0.4
- Port: Modbus Gateway/ HC-A64NET

3 Tryk på -knappen på skærmen.

◆ Konfiguration af enheden og kommunikation

HC-A(8/16/64)MB

HC-A64NET

“Enhedsinformation”

Kontrollér, at netværkskablet vises korrekt i “Enhedsinformation”-oversigten. Tryk på opdater-knappen om nødvendigt.

“Netværksinformation”

Når netværksenheden er blevet integreret i LAN/Modbus-nettet via Ethernet, skal følgende parametre konfigureres:

- IP-adresse: Tillad ændring af IP til enhedsport til netværket (“192.168.0.4” som standard).
- Maske: Bed din IT-tekniker om en behørig værdi (“255.255.255.0” som standard).
- Gateway: LAN gateway-adresse (“192.168.0.1” som standard)

“Seriel information”

Når netværksenheden er blevet integreret i Modbus-nettet via den serielle port RS485, skal følgende parametre konfigureres:

- RS485: 9600 / 19200 Bps (“19200” Bps som standard)
- RS485: Ingen / Ulige / lige paritet (“lige” som standard)
- Modbus-id: 1~128 (“1” som standard)
- Polarisation: Polarisation for kommunikation (“deaktiveret” som standard)

BEMÆRK

Denne del er ikke tilgængelig for HC-A64NET.

“Konfiguration af enhedernes id”

- Automatisk adresse kan foretages ved at trykke på
- Manuel konfiguration af adresse kan foretages ved at tildele hver id til en specifik H-LINK-adresse.
  - *Adresse for udendørsenhed (Ou) og adresse for indendørs-enhed (Iu)*

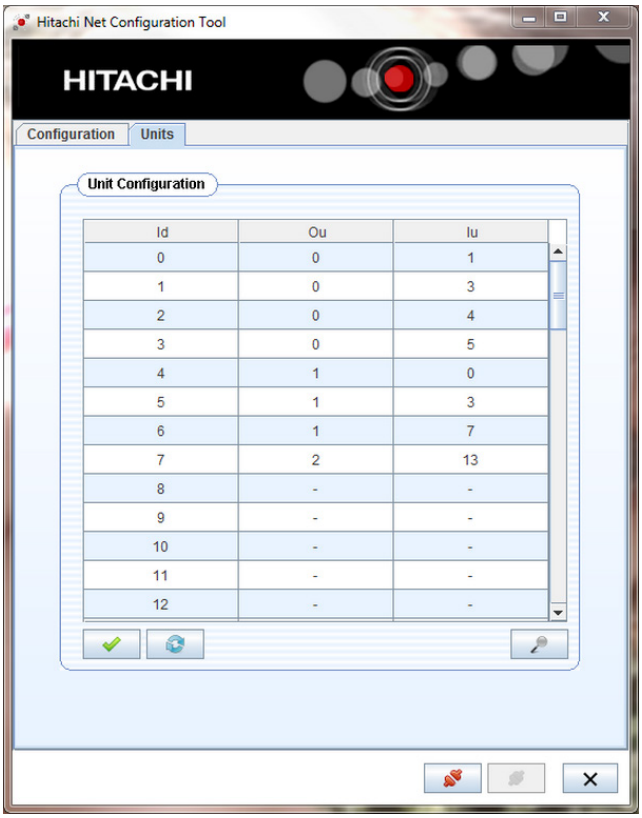

Id	Ou	Iu
0	0	1
1	0	3
2	0	4
3	0	5
4	1	0
5	1	3
6	1	7
7	2	13
8	-	-
9	-	-
10	-	-
11	-	-
12	-	-

- Bekræft konfigurationen ved at trykke på
- Tryk på opdater-knappen under ændring af enheder, som er forbundet til nettet

BEMÆRK

Denne del er ikke tilgængelig for HC-A64NET.

DANSK

4 ELEKTRISK LEDNINGSFØRING

Navn	Forbindelse	Kabelspecifikationer
X1	Strømforsyning (1)	Brug 0,75 mm2 ledninger af mindst samme tykkelse som det fleksible polychloropren-isolerede kabel (kodebetegnelse 60245 IEC 57).
X3	Ethernet (1)	LAN-kabler af kategori 5 eller højere Pc-tilslutning: Brug et krydsede kabel (1 kabelsæt findes i netkonfigurationssættet) for at opnå direkte tilslutning. LAN-forbindelse: Brug et direkte kabel (medfølger) for at oprette en forbindelse til en kommerciel fordeler (hub)
X4	H-LINK (1)	Parsnoet afskærmet kabel 0,75 mm². Afskærmningen skal kun være jordet i den ene side.
X5	RS485 (1)	3-ledet kabel ledningsnet 0,75 mm² jordet i den ene side. Brug forskellige farver til de forskellige ledninger.
X6	USB (1)	USB Mini-B stik (1 kabelsæt findes i netkonfigurationssættet)

BEMÆRK

(1) Disse kabler medfølger ikke.

4.1 DSW KONFIGURATION

Navn	Funktion	Fabriksindstilling	Beskrivelse
SW1	Indstilling		SW1-1: Modbus slutmodstand (*). SW1-2: Ikke i brug (skal altid stå på “ON”)

BEMÆRK

(*) Ikke til HC-A64NET.

5 DRIFT

5.1 KOMPATIBILITET

Disse apparater er ikke kompatible med nogen af de følgende Hitachi styreenheder:

- *Centraliseret fjernbetjeninger*
- *Aircondition styringer til bygninger (*)*
- *Andre Hitachi BMS Gateways (LONWORKS, BACNET, KNX, FIDELIO)*
- *Andre Hitachi MODBUS Gateways*
- *Andre enheder af samme model*

BEMÆRK

(*) HC-A64NET er kompatibel med CSNET Manager.

5.2 INDRE ENHEDER

5.2.1 Tilgængelige data for HC-A(8/16/64)MB

Offset (1)	Navn	Beskrivelse	Værdier	Læs/Skriv
0	EXIST	Eksisterer	0: Eksisterer ikke 1: Eksisterer	Læs
1	SYSTEM_ADDRESS	Systemadresse	0~63	Læs
2	UNIT_ADDRESS	Enhedsadresse		
3	SET_ONOFF	On-/Off-indstillingens rækkefølge	0: Stop 1: On	Læs/Skriv
4	SET_MODE	Funktions-indstillingens rækkefølge	0: Afkøling 1: Tørring 2: Ventilator 3: Varme 4: Auto	Læs/Skriv
5	SET_FAN	Ventilator-indstillingens rækkefølge	0: Lav 1: Mellem 2: Høj 3: High2 4: Auto	Læs/Skriv
6	SET_TSET	Indsstillingstemperatur	ºC (Indstilles ifølge arbejdsområdet for enheden)	Læs/Skriv
7	SET_LOUVER	Indstilling af spjæld	0 ~ 7 (7 er Auto.)	Læs/Skriv
8	SET_CENTRAL	Indstilling af centralenhed (3)	Bit 0: On/Off (kan altid stoppes) Bit 1: Tilstand Bit 2: Temperaturind Bit 3: Ventilator Bit 4: Spjæld	Læs/Skriv
9	READ_ONOFF	On-/Off-status	0: Off 1: On	Læs
10	READ_MODE	Tilstand status	0: Afkøling 1: Tørring 2: Ventilator 3: Varme 4: Auto	Læs
11	READ_FAN	Ventilator status	0: Lav 1: Mellem 2: Høj 3: High2 4: Auto	Læs
12	READ_TSET	Indsstillings-temperatur status	ºC (Indstilles ifølge arbejdsområdet for enheden)	Læs
13	READ_LOUVER	Spjæld status	0 ~ 7 (7 er Auto)	Læs
14	(Ikke anvendt)	(Ikke anvendt)	(Ikke anvendt)	(Ikke anvendt)
15	TIN	Aflæsning af luftindtags-temperatur (2)	-63ºC ~ 63ºC	Læs
16	TOUT	Aflæsning af udladnings-temperatur (2)	-63ºC ~ 63ºC	Læs
17	TGAS	Aflæsning af gasrørs-temperatur (2)	-63ºC ~ 63ºC	Læs
18	TLIQUID	Aflæsning af væskerørs-temperatur (2)	-63ºC ~ 63ºC	Læs
19	ERROR_CODE	Alarmkode	Alarmenhed fra 7-delt	Læs

Offset (1)	Navn	Beskrivelse	Værdier	Læs/Skriv
20	STOP_CAUSE	Årsag til kompressorstop	(Læs service-vejledningen)	Læs
21	VALVE_OPEN	Indendørsenhed ekspansionsventilåbning	0~100	(Ikke anvendt)
22	OPER_CONDITION	Enhedens driftstilstand	0: OFF 1: Thermo OFF 2: Thermo ON 3: Alarm	Læs
23	(Ikke anvendt)	(Ikke anvendt)	(Ikke anvendt)	(Ikke anvendt)
24	AMBIENT TEMPERATURE	Omgivelsestemperatur (2)	-63ºC ~ 63ºC	Læs
25	RCS_TEM	Fjernbetjening temperatur (kun tilgængelig i enheden) (2)	-63ºC ~ 63ºC	Læs
26	RCS_CONFIG	Fjernbetjening switch-konfiguration	b0: 0 Hovedenhed / 1 Slaveenhed b1: 0 med fjernbetjening/ 1 uden fjernbetjening	Læs/Skriv
27	RCS_GROUP	Fjernbetjening skifte gruppe	0: Ingen gruppe 1~255	Læs/Skriv
28~30	(Ikke anvendt)	(Ikke anvendt)	(Ikke anvendt)	(Ikke anvendt)
31	REM_TEM	Fjernsensor temperatur (2)	-63ºC ~ 63ºC	Læs

BEMÆRK

- *(1) Registreret adresse udregnes: "N + (adresse * 32) + Offset" hvor:*
- *N: Position i datatabel er 2000, position 20000 er også tilgængelig for at bevare kompatibilitet med gammel Modbus gateway.*
- *Adresse: Indendørsenheden adresse konfigureres af konfigurationssoftware.*
- *(2) Disse tal henviser til signeret 16-bit værdi med 2-supplementsformat for negative værdier*
- *(3) Bit 0 (til/fra) og Bit4 (spjæld) kan kun vælges, når alle centraler er aktiverede.*
- *For at konfigurere fuldstændig blokering af fjernbetjeningen (central vises på fjernbetjening) skal dette register indstilles på 31.*

5.2.2 Tilgængelige data for HC-A(16/64)MB

Offset	Beskrivelse	Værdier	Læs/Skriv	Availability		
				VRF	RAC-	ATW
0	Eksisterer	0: No exist	Læs	O	O	
		1: Exist				
1	Systemadresse	H-LINK 1: 0~15	Læs	O	O	
2	Enhedsadresse	H-LINK 2: 0~63		O	O	
3	Type	0: Indoor Unit	Læs	O	O	
4	On-/Off-indstillingens rækkefølge	0: Stop	Læs/Skriv	O	O	
		1: Run				
5	Funktionsindstillingens rækkefølge	0: Cool	Læs/Skriv	O	O	
		1: Dry				
		2: Fan				
		3: Heat				
		4: Auto				
6	Ventilatorindstillingens rækkefølge	0: Low	Læs/Skriv	O	O	
		1: Medium				
		2: High				
		3: High2				
		4: Auto				
7	Indstillingstemperatur	ºC (set according to the unit working range)	Læs/Skriv	O	O	
8	Temperature setting with 0.5°C intervals	ºC x 10 (19.5ºC read as 195)	Læs/Skriv	O		
9	Heating temperature setting for AUTO Cool/Heat	°C	Læs/Skriv	O		
10	Heating Temperature setting for AUTO Cool/heat with 0.5°C intervals	ºC x 10 (19.5ºC read as 195)	Læs/Skriv	O		
11	Cooling Temperature setting for AUTO Cool/heat	°C	Læs/Skriv	O		
12	Cooling Temperature setting for AUTO Cool/heat with 0.5°C intervals	ºC x 10 (19.5ºC read as 195)	Læs/Skriv	O		
13	Indstilling af spjæld	0 ~ 7 (7 is Auto)	Læs/Skriv	O		
14	Central setting (2)	Bit 0: On/Off (always can be stopped)	Læs/Skriv	O	O	
		Bit 1: Mode				
		Bit 2: Setting Temp				
		Bit 3: Fan				
		Bit4: Louver				
15	On-/Off-status	0: Off	Læs	O	O	
		1: On				
16	Tilstand status	0: Cool	Læs	O	O	
		1: Dry				
		2: Fan				
		3: Heat				
		4: Auto				

DANSK

Offset	Beskrivelse	Værdier	Læs/Skriv	Availability		
				VRF	RAC-	ATW
17	Ventilator status	0: Low 1: Medium 2: High 3: High2 4: Auto	Læs	O	O	
18	Setting temperature status	ºC (set according to the unit working range)	Læs	O	O	
19	Temperature setting with 0.5°C intervals status	ºC x10 (19.5ºC read as 195)	Læs	O		
20	Heating temperature setting for AUTO Cool/Heat status	°C	Læs	O		
21	Heating Temperature setting for AUTO Cool/heat with 0.5°C intervals status	ºC x 10 (19.5ºC read as 195)	Læs	O		
22	Cooling Temperature setting for AUTO Cool/heat status	°C	Læs	O		
23	Cooling Temperature setting for AUTO Cool/heat with 0.5°C intervals status	ºC x 10 (19.5ºC read as 195)	Læs	O		
24	Spjæld status	0 ~ 7 (7 is Auto)	Læs	O		
25	Air inlet temperature reading	-63ºC ~ 63ºC	Læs	O		
26	Air outlet temperature reading	-63ºC ~ 63ºC	Læs	O		
27	Gas pipe temperature reading	-63ºC ~ 63ºC	Læs	O		
28	Liquid pipe temperature reading	-63ºC ~ 63ºC	Læs	O		
29	Alarmkode	Alarmenhed fra 7-delt	Læs	O	O(1)	
30	Årsag til kompressorstop	(Læs servicevejledningen)	Læs	O		
31	Indendørsenhed ekspansionsventilåbning	0~100	Læs	O		
32	Enhedens driftstilstand	0: OFF 1: Thermo OFF 2: Thermo ON 3: Alarm	Læs	O	O	
33	Remote temperature sensor (THM4) value	-63ºC ~ 63ºC	Læs	O		
34	Remote control switch temperature (only when available in the unit)	-63ºC ~ 63ºC	Læs	O	O	
35	Remote control switch configuration	b0: 0 Master/1Slave b1: 0 wih RCS/1 Without RCS	Læs/Skriv	O		
36	Fjernbetjeningsgruppe	0: No group 1~255	Læs/Skriv	O		
37	CN3 Configuration status	b0: Input 1 open/close b1: Input 2 open/close b2: Enabled/Disabled (Indicates if the unit has CN3 enabled with any function)	Læs	O		
38~49	Reserveret					

Offset	Beskrivelse	Værdier	Læs/Skriv	Availability		
				VRF	RAC-	ATW
50	Run/stop-kontrolenhed	0: Stop 1: Run	Læs/Skriv			O
51	Styreenheds driftsmåde	0: Cool 1: Heat	Læs/Skriv			O
52	Styrekreds 1 Run/stop	0: Stop 1: Run	Læs/Skriv			O
53	Control Heat. OTC Zone 1	0: No 1: Points 2: Gradient 3: Fix	Læs/Skriv			O
54	Control Cool. OTC 1	0: No 1: Points 2: Fix	Læs/Skriv			O
55	Control Circuit 1: Water heating Fix Setting Temp	0~80	Læs/Skriv			O
56	Control Circuit 1: Water cooling Fix Setting Temp	0~80	Læs/Skriv			O
57	Styrekreds 1: ECO driftsmåde	0: ECO 1: Comfort	Læs/Skriv			O
58	Styrekreds 1: Varme ECO afvigelsestemperatur	1~10	Læs/Skriv			O
59	Control Circuit 1: Cool ECO Offset Temperature	1~10	Læs/Skriv			O
60	Control Circuit 1: External MBS/KNX Thermostat Available	0: Not Available 1: Available	Læs/Skriv			O
61	Control Zone 1: Thermostat Setting	0~65535	Læs/Skriv			O
62	Control Zone 1: Room Ambient Temperature	-32667~32667	Læs/Skriv			O
63	Control Circuit 2 Run/Stop	0: Stop 1: Run	Læs/Skriv			O
64	Control Heat. OTC Zone 2	0: No 1: Points 2: Gradient 3: Fix	Læs/Skriv			O
65	Control Cool. OTC Zone 2	0: No 1: Points 2: Fix	Læs/Skriv			O
66	Control Circuit 2: Water heating Fix Setting Temp	0~80	Læs/Skriv			O
67	Control Circuit 2: Water cooling Fix Setting Temp	0~80	Læs/Skriv			O
68	Control Circuit 2: Eco mode	0: ECO 1: Comfort	Læs/Skriv			O
69	Control Circuit 2: Heat ECO Offset Temperature	1~10	Læs/Skriv			O

Offset	Beskrivelse	Værdier	Læs/Skriv	Availability		
				VRF	RAC-	ATW
70	Control Circuit 2: Cool ECO Offset Temperature	1~10	Læs/Skriv			O
71	Control Circuit 2: External MBS/KNX Thermostat Available	0: Not Available 1: Available	Læs/Skriv			O
72	Control Zone 2: Thermostat Setting	0~65535	Læs/Skriv			O
73	Control Zone 2: Room Ambient Temperature	-32667~32667	Læs/Skriv			O
74	Kontrol af DHW-beholders run/stop	0: Stop 1: Run	Læs/Skriv			O
75	Kontrol af DHW-beholders indstillingstemperatur	0~80	Læs/Skriv			O
76	Styring af DHW turbo	0: No request 1: Request	Læs/Skriv			O
77	Reserveret					
78	Styring af driftsmåden DHW efterspørgsel	0: Standard 1: High demand	Læs/Skriv			O
79	Kontrol af svømmebassin run/stop	0: Stop 1: Run	Læs/Skriv			O
80	Kontrol af svømmebassin indstillingstemperatur	0~80	Læs/Skriv			O
81	Kontrol anti-legionærsyge run/stop	0: Stop 1: Run	Læs/Skriv			O
82	Kontrol anti-legionærsyge indstillingstemperatur	0~80	Læs/Skriv			O
83	Kontrol blokering/deblokering af menu	0: No 1: Block (user cannot access the menu)	Læs/Skriv			O
84	Control Yutaki Forced OFF	0: Normal Operation 1: Forced OFF	Læs/Skriv			O
85	Space Heating Heater Forced OFF	0: Normal Operation 1: Heater Forced OFF	Læs/Skriv			O
86	Kontrol af fejl/alarm	0: No 1: Alarm	Læs/Skriv			O
87~99	Reserveret					
100	Status enhed run/stop	0: Stop 1: Run	Læs			O
101	Status Mode	B0: 0: Cool / 1: Heat B1: 0: Normal / 1: Auto	Læs			O
102	Status kredsløb 1 run/stop	0: Stop 1: Run	Læs			O
103	Status Heat. OTC 1	0: No 1: Points 2: Gradient 3: Fix	Læs			O

Offset	Beskrivelse	Værdier	Læs/Skriv	Availability		
				VRF	RAC-	ATW
104	Status Cool. OTC 1	0: No 1: Points 2: Fix	Læs			O
105	Status Circuit 1: Water heating Fix Setting Temp	0~80	Læs			O
106	Status Circuit 1: Water cooling Fix Setting Temp	0~80	Læs			O
107	Status kredsløb 1: ECO driftsmåde	0: ECO 1: Comfort	Læs			O
108	Status kredsløb 1: Varme ECO afvigelsestemperatur	1~10	Læs			O
109	Status Circuit 1: Cool ECO Offset Temperature	1~10	Læs			O
110	Status kredsløb 1: Termostat indstillingstemperatur	50~350 (5,0~35,0)	Læs			O
111	Status kredsløb 1: Termostat rumtemperatur	0~1000 (0,0~100,0)	Læs			O
112	Status kredsløb 1: Trådløs indstillingstemperatur	50~350 (5,0~35,0)	Læs			O
113	Status kredsløb 1: Trådløs rumtemperatur	0~1000 (0,0~100,0)	Læs			O
114	Status Circuit 2 Run/Stop	0: Stop 1: Run	Læs			O
115	Status tilstand OTC 2 opvarmning	0: No 1: Points 2: Gradient 3: Fix	Læs			O
116	Status tilstand OTC 2 køling	0: No 1: Points 2: Fix	Læs			O
117	Status Circuit 2: Water heating Fix Setting Temp	0~80	Læs			O
118	Status Circuit 2: Water cooling Fix Setting Temp	0~80	Læs			O
119	Status Circuit 2: Eco mode	0: ECO 1: Comfort	Læs			O
120	Status kredsløb 1: Varme ECO afvigelsestemperatur	1~10	Læs			O
121	Status Circuit 1: Cool ECO Offset Temperature	1~10	Læs			O
122	Status Zone 2: Thermostat Setting	50~350 (5,0~35,0)	Læs			O
123	Status Zone 2: Ambient Temperature	0~1000 (0,0~100,0)	Læs			O
124	Status Circuit 2: Wireless Setting Temperature	50~350 (5,0~35,0)	Læs			O
125	Status Circuit 2: Wireless Room temperature	0~1000 (0,0~100,0)	Læs			O

Offset	Beskrivelse	Værdier	Læs/Skriv	Availability		
				VRF	RAC-	ATW
126	Status DHW-beholders run/stop	0: Stop 1: Run	Læs			O
127	Status DHW-beholders indstillingstemperatur	0~80	Læs			O
128	Status DHW Boost	0: Disable 1: Enable	Læs			O
129	Reserveret					
130	Status driftsmåden DHW efterspørgsel	0: Standard 1: High demand	Læs			O
131	Status DHW Temperature	-80~100	Læs			O
132	Status svømmebassin run/stop	0: Stop 1: Run	Læs			O
133	Status Swim. Pool Setting Temperature	0~80	Læs			O
134	Status Swim. Pool Temperature	-80~100	Læs			O
135	Status AntiLeg. Run/Stop	0: Stop 1: Run	Læs			O
136	Status anti-leg. indstillingstemperatur	0~80	Læs			O
137	Status blokering/deblokering af menu	0: No 1: Block	Læs			O
138	Status fejl/alarm	0: No 1: Alarm	Læs			O
139	LCD central driftsmåde	0: Local 1: Air (Not available for Yutampo) 2:Water (Not available for Yutampo) 3: Full	Læs			O

Offset	Beskrivelse	Værdier	Læs/Skriv	Availability		
				VRF	RAC-	ATW
140	System konfiguration	b0: Zone 1 Heating Available	Læs			O
		b1: Zone 2 Heating Available				
		b2: Zone 1 Cooling Available				
		b3: Zone 2 Cooling Available				
		b4: DHWT Available				
		b5: SWP Available				
		b6: Room thermostat available Zone 1				
		b7: Room thermostat available Zone 2				
		b8: Wireless Setting C1				
		b9: Wireless Setting C2				
		b10: Wireless Room Temperature C1				
		b11: Wireless Room Temperature C2				
		b12: Slave Unit				
141	Driftstilstand	0: OFF	Læs			O
		1: Cool Demand –OFF				
		2: Cool Thermo-OFF				
		3: Cool Thermo-ON				
		4: Heat Demand-OFF				
		5: Heat Thermo-OFF				
		6: Heat Thermo-ON				
		7: DHW-OFF				
		8: DHW-ON				
		9: SWP-OFF				
		10: SWP-ON				
		11: Alarm				
142	Udendørs omgivende T° (Outdoor ambient temperature)	-80~100	Læs			O
143	Vandindløb T° (Water Inlet unit temperature)	-80~100	Læs			O
144	Vandudløb T° (Water outlet unit temperature)	-80~100	Læs			O
145	H-Link Communication State	0: No alarm	Læs			O
		1: There is no communication with RCS or Yutaki unit during more than 180 seconds				
		2: Data initialization				
146	Software printkort		Læs			O

DANSK

Offset	Beskrivelse	Værdier	Læs/Skriv	Availability		
				VRF	RAC-	ATW
147	Software LCD		Læs			O
148	Enhedens kapacitet		Læs			O
149	Unit Power Consumption		Læs			O
150	Water Outler HP (TwoHP)	0~100 kun YUTAKI S & S Combi	Læs			O
151	Ta1av: Outdoor Unit Ambient Average Temperature	-80~100	Læs			O
152	Ta2: Second Ambient Temperature (inst)	-80~100	Læs			O
153	Ta2av: Second Ambient Temperature (avg)	-80~100				O
154	O2: Water outlet Temp 2 (Two2)	-80~100	Læs			O
155	O3: Water outlet Temp 3 (Two3)	-80~100	Læs			O
156	Tg: Gas Temperature (THMg)	-80~100	Læs			O
157	Tl: Liquid Temperature (THMl)	-80~100	Læs			O
158	EVI: Indoor expansion valve openning	0~100	Læs			O
159	CD: Capacity Data		Læs			O
160	Mixing Valve Opening	0~100	Læs			O
161	Afrimning	0: No defrosting	Læs			O
		1: Defrosting				
162	Enhedsmodel	0: Yutaki S	Læs			O
		1: Yutaki SC				
		2: Yutaki S80				
		3: Yutaki M				
		4: Yutaki SC Lite (New)				
		5: Yutampo (New)				
		6: YCC (New)				
163	Th: Water Temp Setting (Ttwo)	-80~100	Læs			O
164	Vandgennemstrømning	Water Flow [0.1m3/h]	Læs			O
165	Pump Speed	0~100	Læs			O
166	Systemstatus 2	Bit 0: Defrost	Læs			O
		Bit 1: Solar				
		Bit 2: Water Pump 1				
		Bit 3: Water Pump 2				
		Bit 4: Water Pump 3				
		Bit 5: Compressor ON				
		Bit 6: Boiler ON				
		Bit 7: DHW Heater				
		Bit 8: Space Heater				
		Bit 9: Smart function input enabled				
		Bit10: Forced OFF				
		Bit11: DHW recirculation Pump State				
		Bit12: Solar Pump Output State				

Offset	Beskrivelse	Værdier	Læs/Skriv	Availability		
				VRF	RAC-	ATW
167	Alarmnummer	0: Alarm XXX: Alarm number	Læs			O
168	Udladningstemperatur R134a		Læs			O
169	Sugetemperatur R134a		Læs			O
170	R134a udladningstryk		Læs			O
171	R134a sugetryk		Læs			O
172	Kompressorfrekvens R134a		Læs			O
173	Indendørs ekspansionsventilåbning R134a		Læs			O
174	Kompressor nuværende værdi R134a		Læs			O
175	Genforsøgskode R134a		Læs			O
176	R134 Te SH		Læs			O
177	R134 Secondary Current		Læs			O
178	R134 Stop Code		Læs			O
179~ 189	Reserveret					
190	YCC - Enabled Units	0~8	Læs			O
191	YCC - Working Units	0~8	Læs			O
192	YCC - Required Units	0~8	Læs			O

NOTE

- *Register address is calculated as: 5000+(Modbus_Id*200)+offset*
- *Modbus_Id as configured by configuration software*
- *For VRF / Package units, only the relevant data are available (heating units registers will not give any value). The situation is the same for heating units (registers related to air/air units will not give any value).*
- *Availability:*
  - PAC: VRF and package units.
  - RAC: Domestic units connected to the H-link via PSC-6RAD or SPX-RAMHLK
  - ATW: Air to water units.
- *(1) Take into account only if it is different from zero.*
- *(2) Bit 0 (ON/OFF) and Bit 4 (Louver) selectable only when all centrals are actived.*
- *In order to full lock setting from RCS (Central shown in RCS) set this register to 31*

DANSK

5.3 UDENDØRSENHEDER

Some state registers about outdoor unit have been added. Using these registers it is now possible to know the status of the refrigerant cycle. Some control registers have also been added.

Offset	Beskrivelse	Værdier	Læs/Skriv
0	Outdoor Air Temperature	-63ºC ~ 63ºC	Læs
1	Compressor Discharge Temperature	0 ~ 200 ºC	Læs
2	Heating Evaporating Temperature		Læs
3	Number of operating Compressor		Læs
4	Udladningstryk	0.0 ~ 5.0 MPa (0.1 MPa)	Læs
5	Sugetryk	-0.2 ~2.0MPa (0.1 MPa or 0.01MPa depending unit)	Læs
6	Total Current	0 ~ 255 A	Læs
7	Total Real Frequency	0 ~ 255 Hz	Læs
8	EVO1	0 ~ 100 %	Læs
9	EVO2 / Hot Bypass	0 ~ 100 %	Læs
10	EVB	0 ~ 100 %	Læs
11	Outdoor Unit Option Enabled	0: Disable	Læs/Skriv
		1: Enable (it's possible to use the following options, also if the value of register 16 "Power Level Set" is 1)	
12	Noise Control Enabled	0: Disable	Læs/Skriv
		1: Enable (it's possible to send the noise level)	
13	Noise Control Level Set	0~9 (See the service manual of Outdoor unit, function db)	Læs/Skriv
14	Power Control Enabled	0: Disable	Læs/Skriv
		1: Enable (it's possible to send the power level)	
15	Power Level	0~100%	Læs/Skriv
16	Power Level Set	0~100%	Læs
17	Power Level Current Value	0~100%	Læs
18	Power Control Possible	0: Not possible	Læs
		1: Possible	

NOTE

- *Register address is calculated as: 5000+(Modbus_Id*200)+offset*
- *Modbus_Id as configured by configuration software*

5.4 VALGFRIE FUNKTIONER

Some optional functions of the indoor units have been added so that they can be managed from the BMS.

Offset	Beskrivelse	Værdier	Læs/Skriv
0	b1 (Heating temperature compensation)	0~4	Læs/Skriv
1	b2 (Circulation function at heating Thermo-OFF)	0~1	Læs/Skriv
2	b4 (Change of filter cleaning period)	0~4	Læs/Skriv
3	c5 (Static pressure selection)	0~2	Læs/Skriv
4	c8 (Control by the temperature sensor of the remote control switch)	0~2	Læs/Skriv
5	Cb (Selection of forced stoppage logic)	0~1	Læs/Skriv
6	Cd (Stop of indoor unit fan during cooling Thermo-OFF conditions)	0~1	Læs/Skriv
7	CE (Stop of indoor unit fan during heating Thermo-OFF conditions)	0~1	Læs/Skriv
8	d1 (Management of indoor unit operation after a power supply cut off -option 1)	0~1	Læs/Skriv
9	d3 (Management of indoor unit operation after a power supply cut off -option 2)	0~1	Læs/Skriv
10	d4 (RPI(M) Prevention of low air outlet temperature in cooling mode)	0~1	Læs/Skriv
11	d5 (Prevention of low air outlet temperature in heating mode)	0~1	Læs/Skriv
12	E1 (KPI: Ventilation mode / Econofresh cooling mode)	0~2	Læs/Skriv
13	E2 (KPI: Increase of air supply volume / Econofresh enthalpy Sensor)	0~1	Læs/Skriv
14	E4 (KPI: Pre-cooling / preheating period / Econofresh: CO2 sensor)	0~2	Læs/Skriv
15	E8 (Control for stop of the indoor unit fan during heating Thermo-OFF conditions (with remote sensor THM-R2AE connected to the THM4 connector in the indoor unit PCB)	0~1	Læs/Skriv
16	E9 (Intermittent fan operation in heating stop)	0~1	Læs/Skriv
17	Eb (Indoor unit fan control during cooling Thermo-OFF conditions)	0~2	Læs/Skriv
18	EE (Control in “Automatic” indoor fan speed mode)	0~1	Læs/Skriv
19	EF (Control in “Automatic” indoor fan speed mode (supporting High H))	0~1	Læs/Skriv
20	H4 (KPI: Operation modes for the ventilation unit with energy recovery)	0~1	Læs/Skriv
21	K5 (Detection level of the motion sensor kit)	0~2	Læs/Skriv
22	K6 (Selection of allowed operation modes when the control sensor of the indoor unit is set by C8 function)	0~3	Læs/Skriv

NOTE

- *Register address is calculated as: 40000+(Modbus_Id*100)+offset*
- *Modbus_Id as configured by configuration software*

5.5 LISTE MED ALARMKODER

Adresse 19 angiver alarmkode som vist i indendørsenhed. Se servicevejledningen for forklaring af alarmer og reparationsprocedure i tilfælde af alarm på enten indendørsenhed eller udendørsenhed.

5.6 FEJLFINDING

ALARMKODE	BESKRIVELSE	MODFORANSTALTNINGER
LED2 blinker	Unormal drift	Afbryd strømforsyningen til enheden og gentilslut den efter 5 sek. Hvis LED2 stadig blinker bedes du kontakte Hitachi kundeservice.

6 NETKONFIGURATIONSSÆT

Dette tilbehør indeholder alle de nødvendige kabler til Hitachi installatører under idriftsættelse af en Modbus installation.

Liste over komponenter:

USB-kabel		Krydset ethernetkabel		USB-stik	
1x		1x		1x	

USB-hukommelsesstikket indeholder et softwareværktøj til kontrol af Modbus kommunikation under idriftsættelse.

USB-kablet skal kun bruges mens apparatet konfigureres (netværksparametre)

Ethernet-kablet er til hurtig forbindelse med en bærbar computer ved kontrol af Modbus kommunikation.

1 PRODUCTGIDS

1.1 CLASSIFICATIE VAN DE UNIT

Regeling interfacecontroller				
	Scheidingsteken			
		H-LINK II-compatibel		
			Max. aantal regelbare units (8/16/64)	
				MB: Modus-gateway NET: Gateway voor CSNET Manager
HC	-	A	X	X

1.2 MODELLEN

BESCHRIJVING
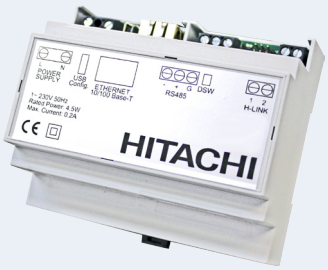
HC-A8MB
HC-A16MB
HC-A64MB
HC-A64NET

1.3 LIJST VAN ACCESSOIRE

BESCHRIJVING
Netconfiguratiekit

NEDERLANDS

2 ALGEMENE GEGEVENS NIEUW PRODUCT

2.3.1 Hardwarespecificaties

Item	Specificaties
Netvoeding	1~ 230 V ±10% 50 Hz
Verbruik	4,5W (maximum)
Buitenafmetingen	Breedte: 106 mm, diepte: 90 mm, hoogte: 58 mm
Gewicht	165 g
Opstellingsvoorwaarden	Binnenshuis (installatie in een afgesloten ruimte die alleen met een werktuig kan worden geopend)
Omgevingstemperatuur	0~60 ºC
Luchtvochtigheid	20~85% (zonder condensatie)

2.3.2 Communicatie

◆ RS485

Item	Specificaties
Type	Modus RTU voor HC-A(8/16/64)MB
	Niet beschikbaar voor HC-A64NET
Aansluiting	Seriële poort RS485 (3 schroefklemmen)
Communicatieleiding	Afgeschermd gedraaid kabelpaar, met derde (gemeenschappelijke) ader, met polariteit.
Communicatiesysteem	Half-duplex, seriële multipunt-aansluiting
Communicatiemethode	Selectie geen pariteit of onpare/pare pariteit. Gegevenslengte: 8 bits – 1 stop-bit
Baud-rate van transmissie	19200/9600 Baud
Lengte	Max. 1200 m conform EIA-485

◆ Ethernet

Item	Specificaties
Type	Modus TCP voor HC-A(8/16/64)MB
	TCP/IP-communicatie voor HC-A64NET
Aansluiting	Ethernet (RJ45)
Communicatieleiding	Twee gedraaide kabelparen CAT5 of hoger (T-568A/T-568B)
Communicatiesysteem	Volledig duplex
Lengte	Max. 100 m conform IEEE 802.3

◆ H-LINK

Item	Specificaties
Communicatie met	HC-A(16/64)MB: SET FREE-, UTOPIA-, CENTRIFUGAL- en HEATING-systemen
	HC-A8MB en HC-A64NET: SET FREE-, UTOPIA- en CENTRIFUGAL-systemen
Communicatieleiding	Afgeschermde gevlochten kabel, geen polariteit
Communicatiesysteem	Half-duplex
Communicatiemethode	Asynchroon
Transmissiesnelheid	9600 Bauds
Kabellengte	Max. 1000 m (totale lengte van HLINK I/O-bus)
Max. aantal gateways	1 gateway (HC-A(8/16/64)MB)/H-LINK-SYSTEEM
Max. aantal binnenunits	HC-A64MB → tot 64 * binnenunits
	HC-A16MB → tot 16 * binnenunits
	HC-A8MB → tot 8 * binnenunits
	HC-A64NET → tot 64* binnenunits

3 INSTALLATIE

3.1 VEILIGHEIDSSAMENVATTING

GEVAAR

- ***Lees deze handleiding zorgvuldig door voordat u aan de installatiewerken begint.***
- ***Installeer dit apparaat niet op plaatsen die openbaar toegankelijk zijn. Installeer het in aansluitkasten die alleen met behulp van een werktuig kunnen worden geopend en bescherming bieden tegen mogelijk elektromagnetische interferenties.***
- ***Sluit de spanning niet aan voordat de installatie is voltooid. Schakel altijd eerste de voeding uit voordat u onderhouds- of reparatiewerken uitvoert.***

LET OP

- *Dit apparaat mag alleen worden bediend door volwassen en competente personen die technische informatie of aanwijzingen over de juiste en veilige bediening van het apparaat hebben ontvangen..*
- *Dit is een product van klasse A. In een huishoudelijke omgeving kan de product radio-interferentie veroorzaken. In dat geval dient u de nodige maatregelen te treffen.*
- *Kinderen moeten onder toezicht staan om te voorkomen dat ze spelen met het apparaat.*
- *Controleer of de niet-meegeleverde elektrische onderdelen (hoofdschakelaars, zekeringautomaten, draden, aansluitingen en klemmen) voldoen aan de elektrische specificaties beschreven in dit hoofdstuk en voldoen aan de nationale en locale regulatie. Neem indien nodig contact op met de plaatselijke autoriteiten voor informatie over normen, regels, reglementen, enz.*
- *Installeer geen netwerk-/Modbus-gateways in plaatsen:*
  - *waar dampen, olie of andere verspreide vloeistoffen het apparaat kunnen beschadigen;*
  - *waar accumulatie, opwekking of lekkage van ontvlambare gassen is opgemerkt;*
  - *dichtbij een hittebron of een bron van elektromagnetisch lawaai;*
  - *in de buurt van de zee, in zoute, zure of basische omgevingen.*

3.2 MEEGELEVERDE ONDERDELEN

Gateway-apparaat		Installatiehandleiding		USB-geheugenstick	
1x	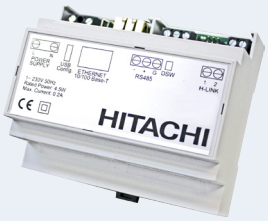	1x		1x	

3.3 AFMETINGEN

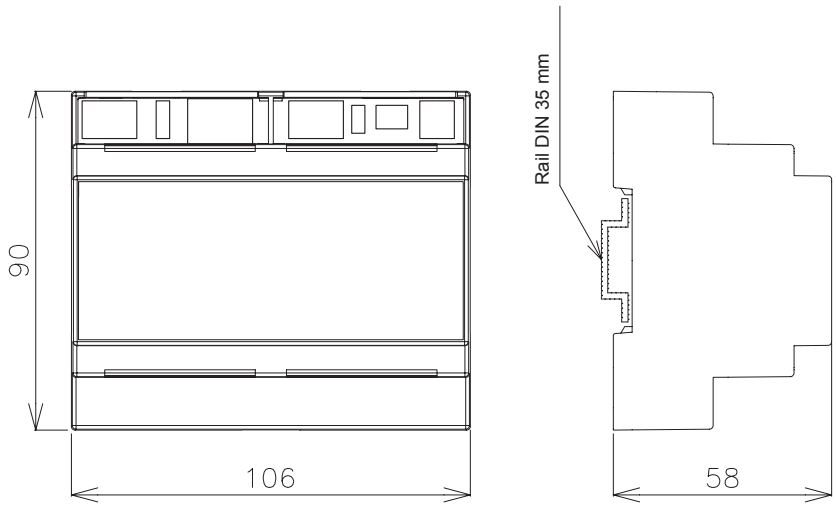

NEDERLANDS

3.4 BESCHRIJVING VAN DE ONDERDELEN

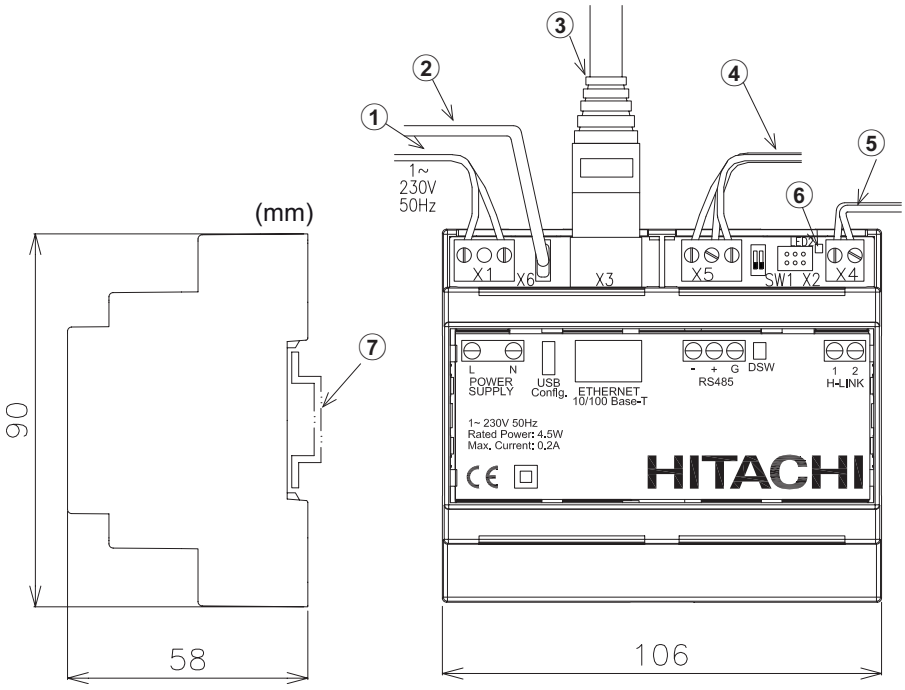

Nr.	Beschrijving
1	Externe stroomvoorziening
2	USB-kabel, alleen tijdens configuratie
3	RJ45 Ethernet HC-A(8/16/64)MB: Modbus TCP HC-A64NET : TCP/IP
4	RS485 Modus RTU voor HC-A(8/16/64)MB Niet beschikbaar voor HC-A64NET
5	H-LINK-communicatiebus met Hitachi-units
6	Aan/uit-indicator
7	Rail DIN 35 mm voor montage in de elektrische box

3.5 INSTALLATIERUIMTE

Houd de grijze ruimte vrij, voor een correcte werking van het apparaat.

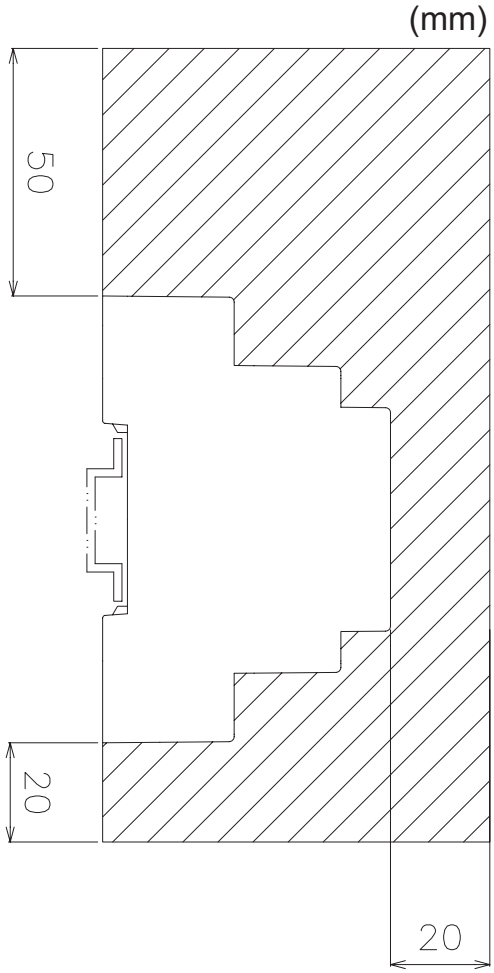

3.6 INSTALLATIEPROCEDURE

GEVAAR

- ***Installeer de unit niet op een openbaar toegankelijke plek. Installeer hem in een afgesloten ruimte of op een plek die alleen toegankelijk is met behulp van een werktuig.***
- ***Sluit de spanning niet aan voordat de installatie is voltooid. Schakel altijd eerste de voeding uit voordat u onderhouds- of reparatiewerken uitvoert.***

LET OP

- *Controleer of de niet-meegeleverde elektrische onderdelen (hoofdschakelaars, zekeringautomaten, draden, aansluitingen en klemmen) voldoen aan de elektrische specificaties beschreven in dit hoofdstuk en voldoen aan de nationale en locale regulatie.*
- *Elke unit die niet is aangesloten of die geen stroom krijgt wanneer u de netwerk-/Modbus-gateways inschakelt, wordt niet herkend en moet later alsnog worden geconfigureerd.*
  - *Voordat u de voeding inschakelt op de network-/Modbus-gateways, dient u te controleren of:*
    - *1. alle circuits die moeten worden aangesloten, correct zijn aangesloten;*
    - *2. alle H-Link-aansluitingen zijn geïnstalleerd;*
    - *3. de Modbus-correct is aangesloten.*
- *Houd de signaalkabels zo kort mogelijk. Leg ze op een afstand van minstens 150 mm van andere netsnoeren. Sluit ze niet samen aan (ze mogen elkaar wel kruisen). Als ze tezamen geïnstalleerd moeten worden, doe dan het volgende om ruis te voorkomen:*
  - *Gebruik voor de communicatie afgeschermde kabels die aan één kant zijn geaard.*

3.7 NETWERKCONFIGURATIE

Op de USB-geheugenstick staat een netconfiguratie-software, voor het configuratie te versoepelen.

3.7.1 Systeemvereisten

Computer met Microsoft Windows 7 of hoger, een vrije USB-poort en Java.

3.7.2 Parameters onder configuratie:

- *Pariteit: Oneven/even/uitgeschakeld*
- *Communicatiesnelheid: 9600/19200 Bps*
- *Modbus-adres*
- *Modbus TCP IP*

3.7.3 Configuratieprocedure

◆ Configuratie via USB-poort

Deze methode is vereist wanneer het IP-adres van het apparaat niet bekend is.

1 Sluit het netwerkapparaat aan op een computer met behulp van een USB-kabel (niet meegeleverd, maar beschikbaar in het netconfiguratiekit)

2 Selecteer de communicatiepoort van de computer.

3 Druk op de -knop in het scherm.

NEDERLANDS

◆ Configuratie via Ethernet-poort

1 Sluit het netwerkapparaat aan op een computer met behulp van een Ethernet-kabel (niet meegeleverd, maar beschikbaar in het netconfiguratiekit of in het CSNET MANAGER)

2 Voer de volgende parameters in:

- IP-adres: 192.168.0.4
- Poort: Modbus Gateway/ HC-A64NET

3 Druk op de -knop in het scherm.

◆ Configuratie van het apparaat en de communicatie

HC-A(8/16/64)MB

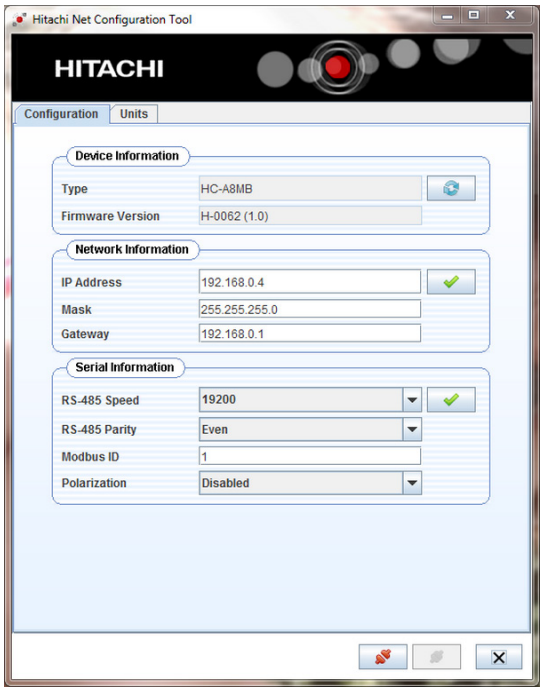

HC-A64NET

“Apparaatgegevens”

Controleer of het netwerkapparaat correct is weergegeven in de tabel “Apparaatgegevens”. Druk indien nodig op de Vernieuwen-knop.

“Netwerkgegevens”

Wanneer het netwerkapparaat op het LAN/Modbus-netwerk is aangesloten via Ethernet, configureer dan de volgende parameters:

- IP-adres: Hiermee kunt u het IP-adres van het netwerkapparaat aanpassen (standaardinstelling “192.168.0.4”).
- Mask: vraag uw IT-technicus om de correcte waarde (standaardinstelling “255.255.255.0”).
- Gateway: Adres van LAN-gateway (standaardinstelling “192.168.0.1”).

“Seriële gegevens”

Wanneer het netwerkapparaat op het Modbus-netwerk is aangesloten via seriële poort RS485, configureer dan de volgende parameters:

- RS485: 9600 / 19200 Bps (standaardinstelling “19200” Bps)
- RS485: None/Oneven/even pariteit (standaardinstelling “even”)
- Modbus-Id: 1~128 (standaardinstelling “1”)
- Polarisatie: Communicatiepolarisatie (standaardinstelling “Uitgeschakeld”)

OPMERKING

Dit deel is niet beschikbaar voor HC-A64NET.

“Configuratie van de unitcodes”

- De adressen kunnen automatisch worden toegekend via pushing
- De adressen kunnen handmatig worden geconfigureerd door elke code toe te wijzen aan een specifiek H-LINK-adres.
  - *Adres buitenunit (Ou) en adres binnenunit (Iu)*

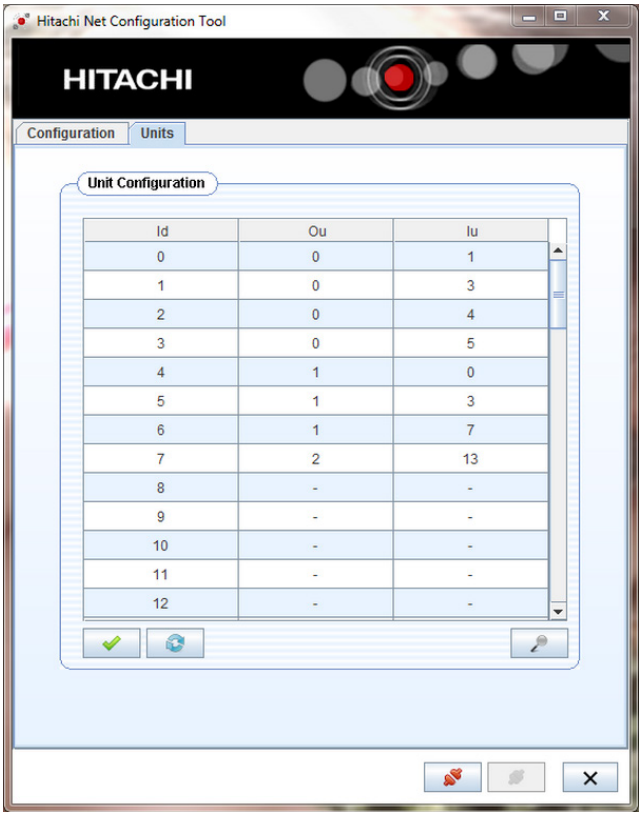

Id	Ou	Iu
0	0	1
1	0	3
2	0	4
3	0	5
4	1	0
5	1	3
6	1	7
7	2	13
8	-	-
9	-	-
10	-	-
11	-	-
12	-	-

- Bevestig de configuratie door te drukken op
- Druk op de Vernieuwen-knop nadat u de op het netwerk aangesloten units hebt gewijzigd

OPMERKING

Dit deel is niet beschikbaar voor HC-A64NET.

NEDERLANDS

4 ELEKTRISCHE BEDRADING

Name	Aansluiting	Kabelspecificaties
X1	Voedingsspanning (1)	Gebruik bedrading van 0,75 mm2 die minstens een capaciteit heeft gelijk aan het gebruikelijke, met polychloropreen beklede flexibele snoer (code 60245 IEC 57).
X3	Ethernet (1)	LAN-kabels categorie 5 of hoger: Aansluiting op pc: Gebruik een gekruiste kabel (1 kabelset beschikbaar in netconfiguratie-kit) voor directe aansluiting. Aansluiting op LAN: gebruik een directe kabel (niet-meegeleverd) voor de aansluiting op een commerciële stroomverdeler (hub).
X4	H-LINK (1)	Afgeschermde gevlochten kabel, 0,75 mm² Afscherming mag slechts aan één zijde geaard zijn.
X5	RS485 (1)	3-aderige afgeschermde kabel 0,75 mm² één zijde geaard zijn. Gebruik verschillende kleuren voor elke kabel.
X6	USB (1)	Kabel met USB-mini-B-stekker (1 kabelset beschikbaar in netconfiguratiekit).

OPMERKING

(1) Deze kabels moeten ter plekke worden voorzien.

4.1 DSW-CONFIGURATIE

Name	Functie	Fabrieks-instelling	Beschrijving
SW1	Configuratie		SW1-1: Modbus-eindweerstand (*) SW1-2: Niet gebruikt (altijd op “ON”)

OPMERKING

(*) Niet van toepassing op HC-A64NET.

5 BEDRIJF

5.1 COMPATIBILITEIT

Deze apparaten zijn niet compatibel met de volgende Hitachi-controllers:

- *Gecentraliseerd externe bediening*
- *Klimaatbediening voor gebouwen (*)*
- *Andere Hitachi BMS-gateways (LONWORKS, BACNET, KNX, FIDELIO)*
- *Andere Hitachi MODBUS-gateways*
- *Andere eenheden van hetzelfde model*

OPMERKING

(*) HC-A64NET is compatibel met CSNET Manager.

5.2 BINNENUNITS

5.2.1 Beschikbare gegevens voor HC-A(8/16/64)MB

Offset (1)	Name	Beschrijving	Waarden	Lezen/Schrijven
0	EXIST	Bestaat	0: Bestaat niet 1: Bestaat	Lezen
1	SYSTEM_ADDRESS	Systeemadres	0~63	Lezen
2	UNIT_ ADDRESS	Unitadres		
3	SET_ONOFF	Aan/uit-instellingsvolgorde	0: Stoppen 1: Aan	Lezen/Schrijven
4	SET_MODE	Volgorde modusinstelling	0: Koelen 1: Ontvochtigen 2: Ventilator 3: Verwarmen 4: Automatisch	Lezen/Schrijven
5	SET_FAN	Volgorde ventilator-instelling	0: Laag 1: Middelhoog 2: Hoog 3: High2 4: Automatisch	Lezen/Schrijven
6	SET_TSET	Ingestelde temperatuur	ºC (Stel op basis van de unit werkbereik)	Lezen/Schrijven
7	SET_LOUVER	Instelling lamellen	0 ~ 7 (7 is Auto)	Lezen/Schrijven
8	SET_CENTRAL	Centrale instelling (3)	Bit 0: On/Off (kan altijd worden gestopt) Bit 1: Modus Bit 2: Temperatuurinstelling Bit 3: Ventilator Bit 4: Lamellen	Lezen/Schrijven
9	READ_ONOFF	AAN/UIT-status	0: Uit 1: On	Lezen
10	READ_MODE	Bedrijfsmodus	0: Koelen 1: Ontvochtigen 2: Ventilator 3: Verwarmen 4: Automatisch	Lezen
11	READ_FAN	Status ventilator	0: Laag 1: Middelhoog 2: Hoog 3: High2 4: Automatisch	Lezen
12	READ_TSET	Status ingestelde temperatuur	ºC (Stel op basis van de unit werkbereik)	Lezen
13	READ_LOUVER	Status lamellen	0 ~ 7 (7 is Auto)	Lezen
14	(Niet gebruikt)	(Niet gebruikt)	(Niet gebruikt)	(Niet gebruikt)
15	TIN	Meetwaarde inlaat-temperatuur (2)	-63ºC ~ 63ºC	Lezen
16	TOUT	Meetwaarde uitlaat-temperatuur (2)	-63ºC ~ 63ºC	Lezen
17	TGAS	Meetwaarde gasleiding-temperatuur (2)	-63ºC ~ 63ºC	Lezen
18	TLIQUID	Meetwaarde vloeistofleiding-temperatuur (2)	-63ºC ~ 63ºC	Lezen
19	ERROR_CODE	Alarmcode	Alarm van 7-segments-display	Lezen

Offset (1)	Name	Beschrijving	Waarden	Lezen/Schrijven
20	STOP_CAUSE	Oorzaak van stoppen compressor	(Raadpleeg onderhoudshandleiding van unit)	Lezen
21	VALVE_OPEN	Opening expansieklep binnenunit	0~100	(Niet gebruikt)
22	OPER_CONDITION	Bedrijfscondities	0: OFF 1: Thermo OFF 2: Thermo ON 3: Alarm	Lezen
23	(Niet gebruikt)	(Niet gebruikt)	(Niet gebruikt)	(Niet gebruikt)
24	AMBIENT TEMPERATURE	Omgevings-temperatuur (2)	-63ºC ~ 63ºC	Lezen
25	RCS_TEM	Temperatuur afstands-bediening (alleen wanneer beschikbaar op unit) (2)	-63ºC ~ 63ºC	Lezen
26	RCS_CONFIG	Afstandsbediening schakelaar configuratie	b0: 0 Hoofdunit / 1 Subunit b1: 0 met afstandsbediening / 1 zonder afstandsbediening	Lezen/Schrijven
27	RCS_GROUP	Afstandsbediening schakelaar groep	0: Geen groep 1~255	Lezen/Schrijven
28~30	(Niet gebruikt)	(Niet gebruikt)	(Niet gebruikt)	(Niet gebruikt)
31	REM_TEM	Temperatuur sensor afstandsbediening (2)	-63ºC ~ 63ºC	Lezen

OPMERKING

- *(1) Registratieadres wordt als volgt berekend: “N + (Adres * 32) + Offset” waarbij:*
- *N: De positie in de gegevenstabel is 2000. De positie 20000 is ook beschikbaar om de compatibiliteit met de oude Modbus-gateway te behouden.*
- *Adres: Adres van binnenunit zoals geconfigureerd door de configuratiesoftware.*
- *(2) Deze nummers verwijzen naar getekende 16-bit-waarde die gebruikt maakt van een 2-complementformaat voor negatieve waarden.*
- *(3) Bit 0 (aan/uit) en Bit 4 (lamellen) alleen beschikbaar wanneer alle centrale controllers geactiveerd zijn*
- *Voor volledige vergrendeling vanuit de afstandsbediening (centraal weergegeven in afstandsbediening), dit register instellen op 31.available Data for hc-a(16/64)mb*

5.2.2 Beschikbare gegevens voor HC-A(16/64)MB

Offset	Beschrijving	Waarden	Lezen/Schrijven	Availability		
				VRF	RAC	ATW
0	Bestaat	0: No exist	Lezen	O	O	
		1: Exist				
1	Systeemadres	H-LINK 1: 0~15	Lezen	O	O	
2	Unitadres	H-LINK 2: 0~63		O	O	
3	Type	0: Indoor Unit	Lezen	O	O	
4	Aan/uit-instellingsvolgorde	0: Stop	Lezen/Schrijven	O	O	
		1: Run				
5	Volgorde modusinstelling	0: Cool	Lezen/Schrijven	O	O	
		1: Dry				
		2: Fan				
		3: Heat				
		4: Auto				
6	Volgorde ventilatorinstelling	0: Low	Lezen/Schrijven	O	O	
		1: Medium				
		2: High				
		3: High2				
		4: Auto				
7	Ingestelde temperatuur	ºC (set according to the unit working range)	Lezen/Schrijven	O	O	
8	Temperature setting with 0.5°C intervals	ºC x 10 (19.5ºC read as 195)	Lezen/Schrijven	O		
9	Heating temperature setting for AUTO Cool/Heat	ºC	Lezen/Schrijven	O		
10	Heating Temperature setting for AUTO Cool/heat with 0.5°C intervals	ºC x 10 (19.5ºC read as 195)	Lezen/Schrijven	O		
11	Cooling Temperature setting for AUTO Cool/heat	ºC	Lezen/Schrijven	O		
12	Cooling Temperature setting for AUTO Cool/heat with 0.5°C intervals	ºC x 10 (19.5ºC read as 195)	Lezen/Schrijven	O		
13	Instelling lamellen	0 ~ 7 (7 is Auto)	Lezen/Schrijven	O		
14	Central setting (2)	Bit 0: On/Off (always can be stopped)	Lezen/Schrijven	O	O	
		Bit 1: Mode				
		Bit 2: Setting Temp				
		Bit 3: Fan				
		Bit4: Louver				
15	AAN/UIT-status	0: Off	Lezen	O	O	
		1: On				
16	Bedrijfsmodus	0: Cool	Lezen	O	O	
		1: Dry				
		2: Fan				
		3: Heat				
		4: Auto				

NEDERLANDS

Offset	Beschrijving	Waarden	Lezen/Schrijven	Availability		
				VRF	RAC	ATW
17	Status ventilator	0: Low 1: Medium 2: High 3: High2 4: Auto	Lezen	O	O	
18	Status ingestelde temperatuur	ºC (set according to the unit working range)	Lezen	O	O	
19	Temperature setting with 0.5°C intervals status	ºC x10 (19.5ºC read as 195)	Lezen	O		
20	Heating temperature setting for AUTO Cool/Heat status	ºC	Lezen	O		
21	Heating Temperature setting for AUTO Cool/heat with 0.5°C intervals status	ºC x 10 (19.5ºC read as 195)	Lezen	O		
22	Cooling Temperature setting for AUTO Cool/heat status	ºC	Lezen	O		
23	Cooling Temperature setting for AUTO Cool/heat with 0.5°C intervals status	ºC x 10 (19.5ºC read as 195)	Lezen	O		
24	Status lamellen	0 ~ 7 (7 is Auto)	Lezen	O		
25	Air inlet temperature reading	-63ºC ~ 63ºC	Lezen	O		
26	Air outlet temperature reading	-63ºC ~ 63ºC	Lezen	O		
27	Gas pipe temperature reading	-63ºC ~ 63ºC	Lezen	O		
28	Liquid pipe temperature reading	-63ºC ~ 63ºC	Lezen	O		
29	Alarmcode	Alarm van 7-segments-display	Lezen	O	O(1)	
30	Oorzaak van stoppen compressor	(Raadpleeg onderhoudshandleiding van unit)	Lezen	O		
31	Opening expansieklep binnenunit	0~100	Lezen	O		
32	Bedrijfscondities	0: OFF 1: Thermo OFF 2: Thermo ON 3: Alarm	Lezen	O	O	
33	Remote temperature sensor (THM4) value	-63ºC ~ 63ºC	Lezen	O		
34	Remote control switch temperature (only when available in the unit)	-63ºC ~ 63ºC	Lezen	O	O	
35	Remote control switch configuration	b0: 0 Master/1Slave b1: 0 wih RCS/1 Without RCS	Lezen/Schrijven	O		
36	Schakelgroep voor afstandsbediening	0: No group 1~255	Lezen/Schrijven	O		
37	CN3 Configuration status	b0: Input 1 open/close b1: Input 2 open/close b2: Enabled/Disabled (Indicates if the unit has CN3 enabled with any function)	Lezen	O		

Offset	Beschrijving	Waarden	Lezen/Schrijven	Availability		
				VRF	RAC	ATW
38~49	Voorbehouden					
50	Regeling starten/stoppen van unit	0: Stop 1: Run	Lezen/Schrijven			O
51	Regeling besturingsmodus	0: Cool 1: Verwarming	Lezen/Schrijven			O
52	Regeling starten/stoppen circuit 1	0: Stop 1: Run	Lezen/Schrijven			O
53	Control Heat. OTC Zone 1	0: No 1: Points 2: Gradient 3: Fix	Lezen/Schrijven			O
54	Control Cool. OTC 1	0: No 1: Points 2: Fix	Lezen/Schrijven			O
55	Control Circuit 1: Water heating Fix Setting Temp	0~80	Lezen/Schrijven			O
56	Control Circuit 1: Water cooling Fix Setting Temp	0~80	Lezen/Schrijven			O
57	Regeling circuit 1: ECO-modus	0: ECO 1: Comfort	Lezen/Schrijven			O
58	Regeling circuit 1: Verwarming ECO referentietemperatuur	1~10	Lezen/Schrijven			O
59	Control Circuit 1: Cool ECO Offset Temperature	1~10	Lezen/Schrijven			O
60	Control Circuit 1: External MBS/KNX Thermostat Available	0: Not Available 1: Available	Lezen/Schrijven			O
61	Control Zone 1: Thermostat Setting	0~65535	Lezen/Schrijven			O
62	Control Zone 1: Room Ambient Temperature	-32667~32667	Lezen/Schrijven			O
63	Control Circuit 2 Run/Stop	0: Stop 1: Run	Lezen/Schrijven			O
64	Control Heat. OTC Zone 2	0: No 1: Points 2: Gradient 3: Fix	Lezen/Schrijven			O
65	Control Cool. OTC Zone 2	0: No 1: Points 2: Fix	Lezen/Schrijven			O
66	Control Circuit 2: Water heating Fix Setting Temp	0~80	Lezen/Schrijven			O
67	Control Circuit 2: Water cooling Fix Setting Temp	0~80	Lezen/Schrijven			O
68	Control Circuit 2: Eco mode	0: ECO 1: Comfort	Lezen/Schrijven			O
69	Control Circuit 2: Heat ECO Offset Temperature	1~10	Lezen/Schrijven			O

Offset	Beschrijving	Waarden	Lezen/Schrijven	Availability		
				VRF	RAC	ATW
70	Control Circuit 2: Cool ECO Offset Temperature	1~10	Lezen/Schrijven			O
71	Control Circuit 2: External MBS/KNX Thermostat Available	0: Not Available 1: Available	Lezen/Schrijven			O
72	Control Zone 2: Thermostat Setting	0~65535	Lezen/Schrijven			O
73	Control Zone 2: Room Ambient Temperature	-32667~32667	Lezen/Schrijven			O
74	Regeling starten/stoppen van warmwaterketel	0: Stop 1: Run	Lezen/Schrijven			O
75	Regeling ingestelde temperatuur warmwaterketel	0~80	Lezen/Schrijven			O
76	Regeling boost warm tapwater	0: No request 1: Request	Lezen/Schrijven			O
77	Voorbehouden					
78	Regeling vraagmodus warm tapwater	0: Standard 1: High demand	Lezen/Schrijven			O
79	Regeling starten/stoppen van zwembad	0: Stop 1: Run	Lezen/Schrijven			O
80	Regeling ingestelde temperatuur zwembad	0~80	Lezen/Schrijven			O
81	Regeling starten/stoppen van antilegionella	0: Stop 1: Run	Lezen/Schrijven			O
82	Regeling ingestelde temperatuur antilegionella	0~80	Lezen/Schrijven			O
83	Regeling menuvergrendeling	0: No 1: Block (user cannot access the menu)	Lezen/Schrijven			O
84	Control Yutaki Forced OFF	0: Normal Operation 1: Forced OFF	Lezen/Schrijven			O
85	Space Heating Heater Forced OFF	0: Normal Operation 1: Heater Forced OFF	Lezen/Schrijven			O
86	Regeling communicatiealarm	0: No 1: Alarm	Lezen/Schrijven			O
87~99	Voorbehouden					
100	Status starten/stoppen unit	0: Stop 1: Run	Lezen			O
101	Status Mode	B0: 0: Cool / 1: Heat B1: 0: Normal / 1: Auto	Lezen			O
102	Status starten/stoppen circuit 1	0: Stop 1: Run	Lezen			O
103	Status Heat. OTC 1	0: No 1: Points 2: Gradient 3: Fix	Lezen			O

Offset	Beschrijving	Waarden	Lezen/Schrijven	Availability		
				VRF	RAC	ATW
104	Status Cool. OTC 1	0: No 1: Points 2: Fix	Lezen			O
105	Status Circuit 1: Water heating Fix Setting Temp	0~80	Lezen			O
106	Status Circuit 1: Water cooling Fix Setting Temp	0~80	Lezen			O
107	Status circuit 1: ECO-modus	0: ECO 1: Comfort	Lezen			O
108	Status circuit 1: Verwarming ECO referentietemperatuur	1~10	Lezen			O
109	Status Circuit 1: Cool ECO Offset Temperature	1~10	Lezen			O
110	Status circuit 1: Ingestelde temperatuur thermostaat	50~350 (5,0~35,0)	Lezen			O
111	Status circuit 1: Kamertemperatuur thermostaat	0~1000 (0,0~100,0)	Lezen			O
112	Status circuit 1: Draadloze instellling temperatuur	50~350 (5,0~35,0)	Lezen			O
113	Status circuit 1: Kamertemperatuur draadloze	0~1000 (0,0~100,0)	Lezen			O
114	Status Circuit 2 Run/Stop	0: Stop 1: Run	Lezen			O
115	Status verwarming OTC zone 2	0: No 1: Points 2: Gradient 3: Fix	Lezen			O
116	Status koeling OTC zone 2	0: No 1: Points 2: Fix	Lezen			O
117	Status Circuit 2: Water heating Fix Setting Temp	0~80	Lezen			O
118	Status Circuit 2: Water cooling Fix Setting Temp	0~80	Lezen			O
119	Status Circuit 2: Eco mode	0: ECO 1: Comfort	Lezen			O
120	Status circuit 1: Verwarming ECO referentietemperatuur	1~10	Lezen			O
121	Status Circuit 1: Cool ECO Offset Temperature	1~10	Lezen			O
122	Status Zone 2: Thermostat Setting	50~350 (5,0~35,0)	Lezen			O
123	Status Zone 2: Ambient Temperature	0~1000 (0,0~100,0)	Lezen			O
124	Status Circuit 2: Wireless Setting Temperature	50~350 (5,0~35,0)	Lezen			O
125	Status Circuit 2: Wireless Room temperature	0~1000 (0,0~100,0)	Lezen			O

Offset	Beschrijving	Waarden	Lezen/Schrijven	Availability		
				VRF	RAC	ATW
126	Status starten/stoppen van warmwaterketel	0: Stop 1: Run	Lezen			O
127	Status ingestelde temperatuur warmwaterketel	0~80	Lezen			O
128	Status DHW Boost	0: Disable 1: Enable	Lezen			O
129	Voorbehouden					
130	Status vraagmodus warm tapwater	0: Standard 1: High demand	Lezen			O
131	Status DHW Temperature	-80~100	Lezen			O
132	Status starten/stoppen van zwembad	0: Stop 1: Run	Lezen			O
133	Status Swim. Pool Setting Temperature	0~80	Lezen			O
134	Status Swim. Pool Temperature	-80~100	Lezen			O
135	Status AntiLeg. Starten/Stoppen	0: Stop 1: Run	Lezen			O
136	Status ingestelde temperatuur antilegionella	0~80	Lezen			O
137	Status menuvergrendeling	0: No 1: Block	Lezen			O
138	Status communicatiealarm	0: No 1: Alarm	Lezen			O
139	Modus LCD centraal	0: Local 1: Air (Not available for Yutampo) 2:Water (Not available for Yutampo) 3: Full	Lezen			O

Offset	Beschrijving	Waarden	Lezen/Schrijven	Availability		
				VRF	RAC	ATW
140	Systeemconfiguratie	b0: Zone 1 Heating Available	Lezen			O
		b1: Zone 2 Heating Available				
		b2: Zone 1 Cooling Available				
		b3: Zone 2 Cooling Available				
		b4: DHWT Available				
		b5: SWP Available				
		b6: Room thermostat available Zone 1				
		b7: Room thermostat available Zone 2				
		b8: Wireless Setting C1				
		b9: Wireless Setting C2				
		b10: Wireless Room Temperature C1				
		b11: Wireless Room Temperature C2				
		b12: Slave Unit				
141	Bedrijfsstatus	0: OFF	Lezen			O
		1: Cool Demand –OFF				
		2: Cool Thermo-OFF				
		3: Cool Thermo-ON				
		4: Heat Demand-OFF				
		5: Heat Thermo-OFF				
		6: Heat Thermo-ON				
		7: DHW-OFF				
		8: DHW-ON				
		9: SWP-OFF				
		10: SWP-ON				
		11: Alarm				
142	OmgevingsT° (Outdoor ambient temperature)	-80~100	Lezen			O
143	T° waterinlaat (Water Inlet unit temperature)	-80~100	Lezen			O
144	T° wateruitlaat (Water outlet unit temperature)	-80~100	Lezen			O
145	H-Link Communication State	0: No alarm	Lezen			O
		1: There is no communication with RCS or Yutaki unit during more than 180 seconds				
		2: Data initialization				
146	Software PCB		Lezen			O

NEDERLANDS

Offset	Beschrijving	Waarden	Lezen/Schrijven	Availability		
				VRF	RAC	ATW
147	Software LCD		Lezen			O
148	Capaciteit van unit		Lezen			O
149	Unit Power Consumption		Lezen			O
150	Water Outler HP (TwoHP)	0~100 Alleen voor YUTAKI S & S-Combi	Lezen			O
151	Ta1av: Outdoor Unit Ambient Average Temperature	-80~100	Lezen			O
152	Ta2: Second Ambient Temperature (inst)	-80~100	Lezen			O
153	Ta2av: Second Ambient Temperature (avg)	-80~100				O
154	O2: Water outlet Temp 2 (Two2)	-80~100	Lezen			O
155	O3: Water outlet Temp 3 (Two3)	-80~100	Lezen			O
156	Tg: Gas Temperature (THMg)	-80~100	Lezen			O
157	Tl: Liquid Temperature (THMl)	-80~100	Lezen			O
158	EVI: Indoor expansion valve openning	0~100	Lezen			O
159	CD: Capacity Data		Lezen			O
160	Mixing Valve Opening	0~100	Lezen			O
161	Ontdooien	0: No defrosting	Lezen			O
		1: Defrosting				
162	Unitmodel	0: Yutaki S	Lezen			O
		1: Yutaki SC				
		2: Yutaki S80				
		3: Yutaki M				
		4: Yutaki SC Lite (New)				
		5: Yutampo (New)				
		6: YCC (New)				
163	Th: Water Temp Setting (Ttwo)	-80~100	Lezen			O
164	Waterstroom	Water Flow [0.1m3/h]	Lezen			O
165	Pump Speed	0~100	Lezen			O
166	Systeemstatus 2	Bit 0: Defrost	Lezen			O
		Bit 1: Solar				
		Bit 2: Water Pump 1				
		Bit 3: Water Pump 2				
		Bit 4: Water Pump 3				
		Bit 5: Compressor ON				
		Bit 6: Boiler ON				
		Bit 7: DHW Heater				
		Bit 8: Space Heater				
		Bit 9: Smart function input enabled				
		Bit10: Forced OFF				
		Bit11: DHW recirculation Pump State				
		Bit12: Solar Pump Output State				

Offset	Beschrijving	Waarden	Lezen/Schrijven	Availability		
				VRF	RAC	ATW
167	Alarmnummer	0: Alarm XXX: Alarm number	Lezen			O
168	Uitlaattemperatuur R134a		Lezen			O
169	Aanzuigtemperatuur R134a		Lezen			O
170	Uitlaatdruk R134a		Lezen			O
171	Aanzuigdruk R134a		Lezen			O
172	Compressorfrequentie R134a		Lezen			O
173	Opening expansieventiel binnenunit R134a		Lezen			O
174	Spanningswaarde compressor R134a		Lezen			O
175	Code opnieuw proberen R134a		Lezen			O
176	R134 Te SH		Lezen			O
177	R134 Secondary Current		Lezen			O
178	R134 Stop Code		Lezen			O
179~ 189	Voorbehouden					
190	YCC - Enabled Units	0~8	Lezen			O
191	YCC - Working Units	0~8	Lezen			O
192	YCC - Required Units	0~8	Lezen			O

NOTE

- *Register address is calculated as: 5000+(Modbus_Id*200)+offset*
- *Modbus_Id as configured by configuration software*
- *For VRF / Package units, only the relevant data are available (heating units registers will not give any value). The situation is the same for heating units (registers related to air/air units will not give any value).*
- *Availability:*
  - PAC: VRF and package units.
  - RAC: Domestic units connected to the H-link via PSC-6RAD or SPX-RAMHLK
  - ATW: Air to water units.
- *(1) Take into account only if it is different from zero.*
- *(2) Bit 0 (ON/OFF) and Bit 4 (Louver) selectable only when all centrals are actived.*
- *In order to full lock setting from RCS (Central shown in RCS) set this register to 31*

NEDERLANDS

5.3 BUITENUNITS

Some state registers about outdoor unit have been added. Using these registers it is now possible to know the status of the refrigerant cycle. Some control registers have also been added.

Offset	Beschrijving	Waarden	Lezen/Schrijven
0	Outdoor Air Temperature	-63ºC ~ 63ºC	Lezen
1	Compressor Discharge Temperature	0 ~ 200 ºC	Lezen
2	Heating Evaporating Temperature		Lezen
3	Number of operating Compressor		Lezen
4	Uitlaatdruk	0.0 ~ 5.0 MPa (0.1 MPa)	Lezen
5	Zuigdruk	-0.2 ~2.0MPa (0.1 MPa or 0.01MPa depending unit)	Lezen
6	Total Current	0 ~ 255 A	Lezen
7	Total Real Frequency	0 ~ 255 Hz	Lezen
8	EVO1	0 ~ 100 %	Lezen
9	EVO2 / Hot Bypass	0 ~ 100 %	Lezen
10	EVB	0 ~ 100 %	Lezen
11	Outdoor Unit Option Enabled	0: Disable	Lezen/Schrijven
		1: Enable (it's possible to use the following options, also if the value of register 16 "Power Level Set" is 1)	
12	Noise Control Enabled	0: Disable	Lezen/Schrijven
		1: Enable (it's possible to send the noise level)	
13	Noise Control Level Set	0~9 (See the service manual of Outdoor unit, function db)	Lezen/Schrijven
14	Power Control Enabled	0: Disable	Lezen/Schrijven
		1: Enable (it's possible to send the power level)	
15	Power Level	0~100%	Lezen/Schrijven
16	Power Level Set	0~100%	Lezen
17	Power Level Current Value	0~100%	Lezen
18	Power Control Possible	0: Not possible	Lezen
		1: Possible	

NOTE

- *Register address is calculated as: 5000+(Modbus_Id*200)+offset*
- *Modbus_Id as configured by configuration software*

5.4 OPTIONELE FUNCTIES

Some optional functions of the indoor units have been added so that they can be managed from the BMS.

Offset	Beschrijving	Waarden	Lezen/Schrijven
0	b1 (Heating temperature compensation)	0~4	Lezen/Schrijven
1	b2 (Circulation function at heating Thermo-OFF)	0~1	Lezen/Schrijven
2	b4 (Change of filter cleaning period)	0~4	Lezen/Schrijven
3	c5 (Static pressure selection)	0~2	Lezen/Schrijven
4	c8 (Control by the temperature sensor of the remote control switch)	0~2	Lezen/Schrijven
5	Cb (Selection of forced stoppage logic)	0~1	Lezen/Schrijven
6	Cd (Stop of indoor unit fan during cooling Thermo-OFF conditions)	0~1	Lezen/Schrijven
7	CE (Stop of indoor unit fan during heating Thermo-OFF conditions)	0~1	Lezen/Schrijven
8	d1 (Management of indoor unit operation after a power supply cut off -option 1)	0~1	Lezen/Schrijven
9	d3 (Management of indoor unit operation after a power supply cut off -option 2)	0~1	Lezen/Schrijven
10	d4 (RPI(M) Prevention of low air outlet temperature in cooling mode)	0~1	Lezen/Schrijven
11	d5 (Prevention of low air outlet temperature in heating mode)	0~1	Lezen/Schrijven
12	E1 (KPI: Ventilation mode / Econofresh cooling mode)	0~2	Lezen/Schrijven
13	E2 (KPI: Increase of air supply volume / Econofresh enthalpy Sensor)	0~1	Lezen/Schrijven
14	E4 (KPI: Pre-cooling / preheating period / Econofresh: CO2 sensor)	0~2	Lezen/Schrijven
15	E8 (Control for stop of the indoor unit fan during heating Thermo-OFF conditions (with remote sensor THM-R2AE connected to the THM4 connector in the indoor unit PCB)	0~1	Lezen/Schrijven
16	E9 (Intermittent fan operation in heating stop)	0~1	Lezen/Schrijven
17	Eb (Indoor unit fan control during cooling Thermo-OFF conditions)	0~2	Lezen/Schrijven
18	EE (Control in “Automatic” indoor fan speed mode)	0~1	Lezen/Schrijven
19	EF (Control in “Automatic” indoor fan speed mode (supporting High H))	0~1	Lezen/Schrijven
20	H4 (KPI: Operation modes for the ventilation unit with energy recovery)	0~1	Lezen/Schrijven
21	K5 (Detection level of the motion sensor kit)	0~2	Lezen/Schrijven
22	K6 (Selection of allowed operation modes when the control sensor of the indoor unit is set by C8 function)	0~3	Lezen/Schrijven

NOTE

- *Register address is calculated as: 40000+(Modbus_Id*100)+offset*
- *Modbus_Id as configured by configuration software*

5.5 LIJST VAN ALARMCODES

Adres 19 geeft alarmcode aan zoals weergegeven op de binnenunit. Raadpleeg in geval van een alarm in de binnenunit of buitenunit de onderhoudshandleiding voor toelichting bij de alarmcode en bij de reparatieprocedure.

5.6 PROBLEMEN OPSPOREN

ALARMCODE	BESCHRIJVING	OPLOSSING
LED2 knippert	Abnormale werking	Schakel de netvoeding naar het apparaat uit en schakelt hem na 5 seconden opnieuw in. Als LED2 nog altijd knippert, neem dan contact op met de klantenservice van Hitachi.

6 NETCONFIGURATIEKIT

Dit accessoire biedt Hitachi-installateurs alle nodige kabels voor het inbedrijfstellen van een Modbus-installatie.

Lijst van onderdelen:

USB-kabel		Gekruiste Ethernet-kabel		USB-geheugenstick	
1x		1x		1x	

De USB-geheugenstick bevat een software voor het controleren van de communicatie tijdens de inbedrijfstelling.

De USB-kabel is alleen nodig voor het configureren van het apparaat (netwerkparameters).

De Ethernet-kabel is meegeleverd voor aansluiting op een laptop voor het controleren van de Modbus-communicatie.

1 PRODUKTGUIDE

1.1 KLASSIFICERING AV ENHETER

Kontrollenhet för gränssnitt				
	Bindestreck			
		H-LINK II-kompatibel		
			Max antal styrbara enheter (8/16/64)	
				MB: Modbus-gateway NET: Gateway för CSNET Manager
HC	-	A	X	X

1.2 MODELLER

BESKRIVNING
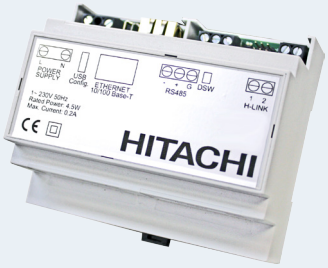
HC-A8MB
HC-A16MB
HC-A64MB
HC-A64NET

1.3 TILLBEHÖRSLISTA

BESKRIVNING
Kit för nätkonfigurering

SVENSKA

2 ALLMÄN DATA FÖR NY PRODUKT

2.3.1 Specifikationer för maskinvara

Objekt	Specifikationer
Strömförsörjning	1~ 230 V ±10% 50 Hz
Förbrukning	4,5W (max)
Yttermått	Bredd: 106 mm, Djup: 90 mm, Höjd: 58 mm
Vikt	165 g
Installationsvillkor	Inomhus (ska installeras inom ett slutet område som endast kan kommas åt med ett verktyg)
Omgivningstemperatur	0~60 ºC
Fuktighet	20~85 % (utan kondens)

2.3.2 Kommunikation

◆ RS485

Objekt	Specifikationer
Typ	Modbus RTU för HC-A(8/16/64)MB
	Inte tillgänglig för HC-A64NET
Kontakt	Serieport RS485 (3-polig skruvplint)
Kommunikationslinje	Avskärmad partvinnad kabel, med en tredje tråd (för den allmänna), med polaritet.
Kommunikationssystem	Halvduplex, flerpunktsseriekoppling
Kommunikationsmetod	Icke-paritet eller udda/jämnt paritetsval. Datalängd: 8-bitar - 1 stoppbit
Överföringshastighet	19200/9600 Båd
Längd	Max. 1200 m enligt EIA-485

◆ Ethernet

Objekt	Specifikationer
Typ	Modbus TCP för HC-A(8/16/64)MB
	TCP/IP-kommunikation för HC-A64NET
Kontakt	Ethernet (RJ45)
Kommunikationslinje	Två trådig tvinnad parkabel CAT5 eller bättre (T-568A/T-568B)
Kommunikationssystem	Full-duplex
Längd	Max. 100 m enligt IEEE 802.3

◆ H-LINK

Objekt	Specifikationer
Kommunikation med	HC-A(16/64)MB: SET FREE, UTOPIA, CENTRIFUGAL and HEATING systems HC-A8MB och HC-A64NET: SET FREE, UTOPIA och CENTRIFUGAL-system
Kommunikationslinje	Tvinnad skärmad parkabel, ingen polaritet.
Kommunikationssystem	Halv-duplex
Kommunikationsmetod	Asynkron
Överföringshastighet	9 600 båd
Ledningslängd	1000 m maximum (HLINK I/O-bussens totala längd)
Maximalt antal anslutna gateways	1 Gateway (HC-A(8/16/64)MB)/H-LINK-SYSTEM
Maximalt antal inomhusenheter	HC-A64MB → upp till 64 * inomhusenheter
	HC-A16MB → upp till 16 * inomhusenheter
	HC-A8MB → upp till 8 * inomhusenheter
	HC-A6NET → upp till 64 * inomhusenheter

3 INSTALLATION

3.1 SÄKERHETSSAMMANFATTNING

FARA

- ***Läs denna handbok noggrant innan du påbörjar installationen.***
- ***Installera inte enheten på en platser där den är tillgänglig för allmänheten. Installera den i en elektrisk inhängnad där den endast kan kommas åt med verktyg och som ger skydd mot eventuella elektromagnetiska störningar.***
- ***Anslut inte strömförsörjningen förrän installationen av enheten är korrekt utförd. Koppla alltid från enhetens spänningsmatningen innan något underhåll eller servicearbete utförs.***

VARNING

- *Denna apparat får endast användas av vuxna och kunniga personer som har fått den tekniska information eller de instruktioner som är nödvändiga för att kunna hantera den säkert.*
- *Detta är en klass A-produkt. I en hemmiljö kan denna produkt orsaka radiostörningar vilket kan göra det nödvändigt för användaren att vidta lämpliga åtgärder.*
- *Håll uppsikt över barn och låt dem inte leka med installationen.*
- *Se till att alla ej-medföljande elektriska komponenter (huvudströmbrytare, kretsbrytare, kablar, kontakter och kabelanslutningar) har valts enligt de elektriska uppgifter som angetts i det här dokumentet och att de följer nationella och lokala bestämmelser. Kontakta de lokala myndigheterna avseende standard, regler, bestämmelser och dylikt vid behov.*
- *Installera inte Nätverks- / Modbus-gateways på följande platser:*
  - *där ånga, olja eller andra utspridda vätskor som kan skada enheten.*
  - *där ansamling eller alstring av lättantändliga gaser eller gasläckor har upptäckts.*
  - *i närheten av värmekällor eller elektromagnetiska bullerkällor.*
  - *som ligger nära havet eller i salthaltiga, sura eller alkaliska miljöer.*

3.2 MEDFÖLJANDE KOMPONENTER

Gateway-enhet		Installationshandbok		USB-minne	
1x	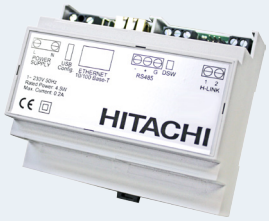	1x		1x	

3.3 DIMENSIONSUPPGIFTER

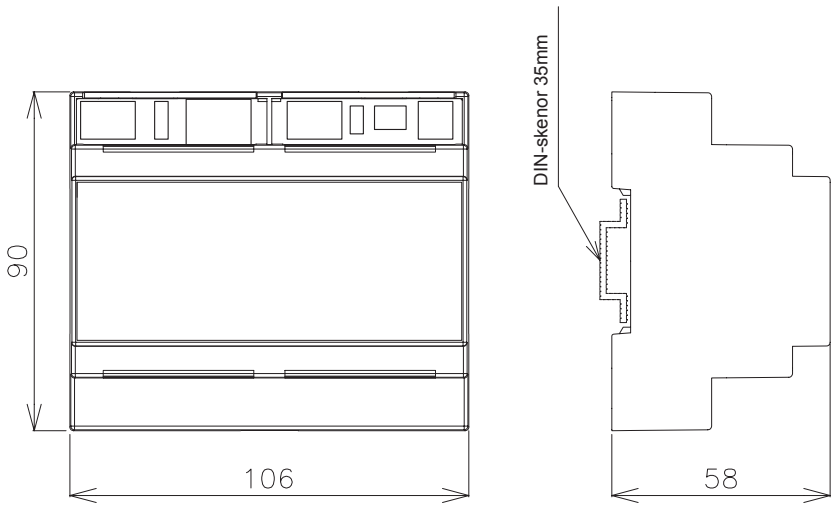

SVENSKA

3.4 BESKRIVNING AV DELARNA

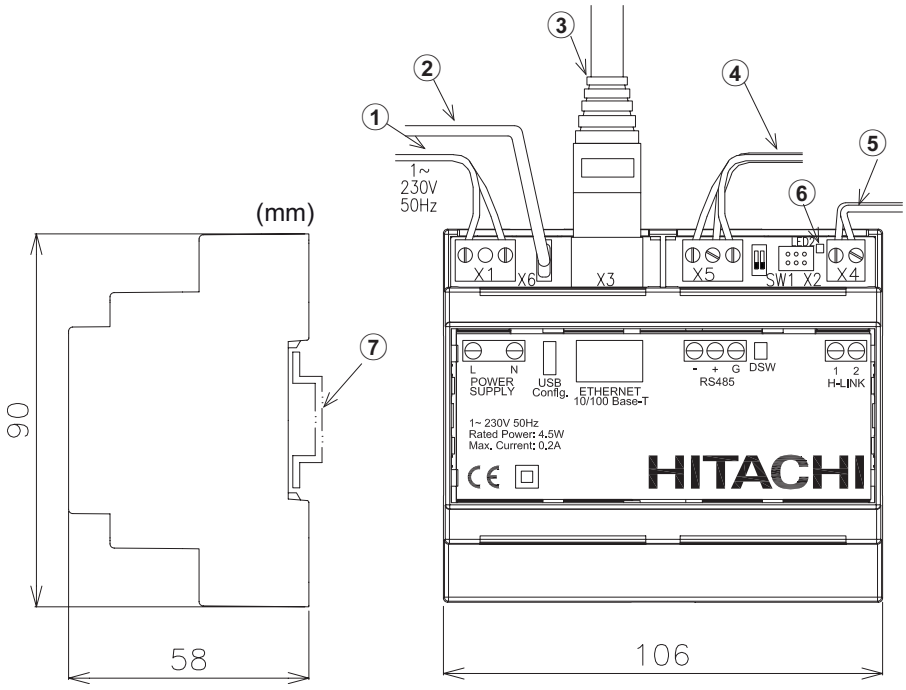

Nr.	Beskrivning
1	Extern strömförsörjning
2	USB-kabel endast under konfigureringstiden
3	RJ45 Ethernet HC-A(8/16/64)MB: Modbus TCP HC-A64NET : TCP/IP
4	RS485 Modbus RTU för HC-A(8/16/64)MB Inte tillgänglig för HC-A64NET
5	H-LINK, kommunikationsbus med Hitachi-enheter
6	Lysdiodindikator för drift
7	Rail DIN 35 mm för montering innanför kopplingslådan

3.5 INSTALLATIONSPLATS

Lämna det gråa området fritt för korrekt användning av enheten.

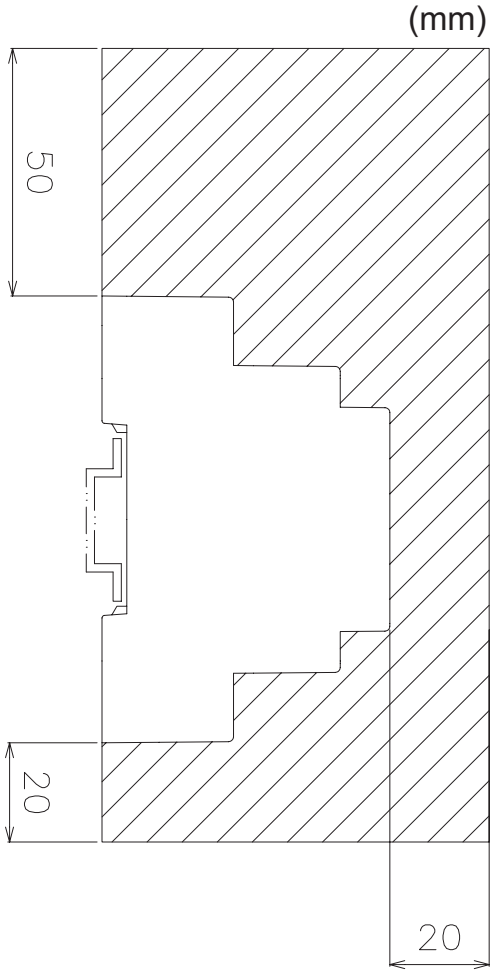

3.6 INSTALLATIONSPROCEDUR

FARA

- ***Installera inte enheten på platser där allmänheten kan komma åt den. Installera den i ett slutet område eller dylikt där den endast kan kommas åt med ett verktyg.***
- ***Anslut inte strömförsörjningen förrän installationen av enheten är korrekt utförd. Koppla alltid från enhetens spänningsmatningen innan något underhåll eller servicearbete utförs.***

VARNING

- *Se till att alla ej-medföljande elektriska komponenter (huvudströmbrytare, kretsbrytare, kablar, kontakter och kabelanslutningar) har valts enligt de elektriska uppgifter som angetts i det här dokumentet och att de följer nationella och lokala bestämmelser.*
- *Enheter som inte är anslutna till eller inte har någon strömtillförsel när Nätverk-/Modbus-gateways slås på, identifieras inte och måste konfigureras senare.*
  - *Innan du strömsätter och startar Nätverks -/ Modbus-gateways, måste du se till att:*
    - *1. Alla kretsar är korrekt anslutna.*
    - *2. alla H-Link-anslutningar har installerats.*
    - *3. Modbus-anslutningen har utförts korrekt.*
- *Signalkablarna ska vara så korta som möjligt. Håll dem på ett avstånd på minst 150 mm från andra elkablar. Kablarna får inte sammankopplas (men de får korsas). Om de måste installeras tillsammans gör du följande för att undvika bullerstörningar:*
  - *För kommunikation används en skyddad ledning som är jordad på ena sidan.*

3.7 NÄTVERKSKONFIGURATION

I USB-minnet medföljer ett mjukvaruverktyg och ett nätverkskonfigureringsverktyg för lätt och användarvänlig konfigurering.

3.7.1 Datorkrav

För att kunna använda denna enhet krävs en PC med Microsoft Windows 7 eller högre, samt en ledig USB-port och Java.

3.7.2 Parametrar under konfigurering:

- *Paritet: Udda/Jämn/Avaktiverad*
- *Kommunikationshastighet: 9600/19200 Bps*
- *Modbus-adress*
- *Modbus TCP IP*

3.7.3 Konfigurationsprocedur

◆ Konfigurering via USB-port

Denna metod krävs när enhetens IP-adress är okänd.

1. Anslut nätverkenheten till en dator via en USB-kabel (medföljer inte, men tillgänglig via kitet för nätkonfigurering)
2. Välj datorns kommunikationsport.
3. Tryck på -knappen på skärmen.

SVENSKA

◆ Konfigurering via Ethernet-port

1 Anslut nätverkenheten till en dator via en Ethernet-kabel (medföljer inte, men tillgänglig via kitet för nätkonfigurering eller CSNET MANAGER)

2 Mata in följande parametrar:

- IP-adress: 192.168.0.4
- Port: Modbus Gateway/ HC-A64NET

3 Tryck på -knappen på skärmen.

◆ Konfiguration av anordningen och kommunikation

HC-A(8/16/64)MB

HC-A64NET

“Enhetsinformation”

Kontrollera att nätverksenheten visas korrekt i “Enhetsinformation”- tabellen. Tryck på uppdateringsknappen om så krävs.

“Nätverkskonfiguration”-tabell

När nätverksenheten är integrerad i LAN/Modbusnätet via Ethernet, ska du konfigurera följande parametrar:

- IP-adress: Tillåter dig ändra IP-adressen på nätverksenhetens port (“192.168.0.4” som standard).
- Mask: Använd 255.255.255.0 som standard eller be din IT-tekniker om korrekt värde (“255.255.255.0” som standard).
- Gateway: LAN gateway-adress (“192.168.0.1” som standard)

Konfiguration av “Seriekonfiguration”

När nätverksenheten är integrerad i Modbusnätet via en serieport RS485, ska du konfigurera följande parametrar:

- RS485: 9600 / 19200 Bps (“19200” Bps som standard)
- RS485: Ingen/Udda/jämn paritet (“Udda” som standard)
- Modbus-ID: 1~128 Bps (“1” som standard)
- Polarisation: Kommunikations polarisation (“Avaktiverad” som standard)

OBS!

Denna del är inte tillgänglig för HC-A64NET

“Enheternas konfigurations-ID”

- Ställ in adresser automatisk genom att trycka på
- Ställ in adresser manuellt genom att tilldela en specifik H-LINK adress till varje ID.
  - *Adress till utomhusenhet (Ou) och adress till inomhusenhet (Iu)*

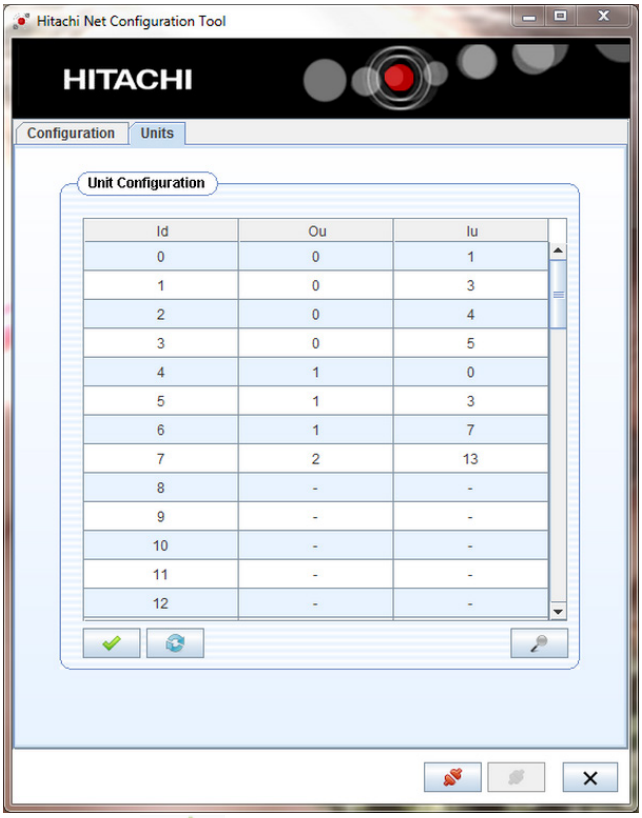

Id	Ou	Iu
0	0	1
1	0	3
2	0	4
3	0	5
4	1	0
5	1	3
6	1	7
7	2	13
8	-	-
9	-	-
10	-	-
11	-	-
12	-	-

- Bekräfta konfigurationen genom att trycka på
- Tryck på uppdateringsknappen när någon ändring utförs på de nätanslutna enheterna

OBS!

Denna del är inte tillgänglig för HC-A64NET

SVENSKA

4 ELEKTRISKA LEDNINGAR

Benämning	Anslutning	Kabelspecifikation
X1	Strömförsörjning (1)	Använd 0,75 mm2 kablar som är tyngre än den polykloroprengummiklädda flexibla kabeln (kod 60245 IEC 57).
X3	Ethernet (1)	Kategori 5 eller högre för LAN-kablar PC-anslutning: Använd en korsad kabel (1 kabelset tillgänglig i kitet för nätkonfigurering) för direkt anslutning. LAN-anslutning: Använd en direktkabel (medföljer) för hubbanslutning.
X4	H-LINK (1)	Tvinnad skärmad parkabel, 0,75 mm². Skärmningen får endast vara jordad på ena sidan.
X5	RS485 (1)	3-trådigt kabelskydd 0,75 mm² jordad på ena sidan. Använd separata färger för varje kabel.
X6	USB (1)	USB mini-B kontakt (1 kabelset tillgänglig i kitet för nätkonfigurering)

OBS!

(1) Dessa kablar medföljer ej.

4.1 DSW-KONFIGURERING

Benämning	Funktion	Fabriks-inställning	Beskrivning
SW1	Konfiguration		SW1-1: Modbus slutmotstånd (*). SW1-2: Används inte (lämna alltid på "ON")

OBS!

(*) Gäller inte för HC-A64NET.

5 DRIFT

5.1 KOMPATIBILITET

Dessa enheter är inte kompatibla med någon av HITACHIs följande styrenheter:

- *Centrala fjärrkontroller*
- *Luftkonditioneringskontroller för byggnader (*)*
- *Andra Hitachi BMS Gateways (LONWORKS, BACNET, KNX, FIDELIO)*
- *Andra Hitachi MODBUS Gateways*
- *Andra enheter av samma modell*

OBS!

(*) HC-A64NET är kompatibelt med CSNET Manager.

5.2 INNEHÅLL

5.2.1 Tillgängliga datauppgifter för HC-A(8/16/64)MB

Offset (1)	Benämning	Beskrivning	Värden	Läs/skriv
0	EXIST	Finns	0: Finns ej 1: Finns	Läs
1	SYSTEM_ADDRESS	Systemadress	0~63	Läs
2	UNIT_ ADDRESS	Enhetsadress		
3	SET_ONOFF	På/av-inställningsordning	0: Stopp 1: Kör	Läs/skriv
4	SET_MODE	Kommandon för inställningsläge	0: Svalt 1: Torrt 2: Fläkt 3: Värme 4: Auto	Läs/skriv
5	SET_FAN	Inställningskommandon för fläkt	0: Låg 1: Mellan 2: Hög 3: High2 4: Auto	Läs/skriv
6	SET_TSET	Temperatur-inställning	ºC (Konfigurera enligt arbetsområdet för enheten)	Läs/skriv
7	SET_LOUVER	Spjällinställning	0 ~ 7 (7 är Auto)	Läs/skriv
8	SET_CENTRAL	Central-inställning (3)	Del 0: On/Off (kan alltid stoppas) Del 1: Läge Del 2: Temperaturinställning Del 3: Fläkt Bit 4: Galler	Läs/skriv
9	READ_ONOFF	On/Off-status	0: Off 1: On	Läs
10	READ_MODE	Statusläge	0: Svalt 1: Torrt 2: Fläkt 3: Värme 4: Auto	Läs
11	READ_FAN	Fäktstatus	0: Låg 1: Mellan 2: Hög 3: High2 4: Auto	Läs
12	READ_TSET	Status för temperaturinställning	ºC (Konfigurera enligt arbetsområdet för enheten)	Läs
13	READ_LOUVER	Spjällstatus	0 ~ 7 (7 är Auto)	Läs
14	(Används ej)	(Används ej)	(Används ej)	(Används ej)
15	TIN	Avläsning av inloppstemp. (2)	-63ºC ~ 63ºC	Läs
16	TOUT	Avläsning av utloppstemp. (2)	-63ºC ~ 63ºC	Läs
17	TGAS	Läsning av gasledningstemp. (2)	-63ºC ~ 63ºC	Läs
18	TLIQUID	Läsning av vätskeledningstemperatur (2)	-63ºC ~ 63ºC	Läs
19	ERROR_CODE	Larmkod	Larmenhet från 7-segment	Läs
20	STOP_CAUSE	Orsak till kompressor-stopp	(Läs enhetens servicehandbok)	Läs

SVENSKA

Offset (1)	Benämning	Beskrivning	Värden	Läs/skriv
21	VALVE_OPEN	Inomhus-enhetens öppning av expansionsventil	0~100	(Används ej)
22	OPER_CONDITION	Enhetens driftsvillkor	0: OFF 1: Thermo OFF 2: Thermo ON 3: Larm	Läs
23	(Används ej)	(Används ej)	(Används ej)	(Används ej)
24	AMBIENT TEMPERATURE	Omgivningstemperatur (2)	-63ºC ~ 63ºC	Läs
25	RCS_TEM	Fjärravläsning av temperatur (endast när det tillåts av enheten) (2)	-63ºC ~ 63ºC	Läs
26	RCS_CONFIG	Fjärrkontroll switch konfigurering	b0: 0 primärenhet / 1 sekundärenhet b1: 0 med fjärrkontroll/ 1 utan fjärrkontroll	Läs/skriv
27	RCS_GROUP	Fjärrkontroll switch gruppen	0: Ingen grupp 1~255	Läs/skriv
28~30	(Används ej)	(Används ej)	(Används ej)	(Används ej)
31	REM_TEM	Fjärrsensor temperatur (2)	-63ºC ~ 63ºC	Läs

OBS!

- *(1) Registrerad adress beräknas enligt : "N + (Adress * 32) + Offset" när:*
- *N: Datatabell läget är 2000, läget 20000 är också tillgänglig för att bibehålla kompatibilitet med äldre Modbus-gateway.*
- *Adress: Adress till inomhusenhet konfigurerad av konfigureringsmjukvara.*
- *(2) Dessa tal avser 16-bitars värden med förtecken och tvåkomplementsform för negativa värden.*
- *(3) Bit 0 (on/off) och Bit 4 (galler) kan endast väljas när alla centraler är aktiverade.*
- *För fullständig låsinställning från fjärrkontrollen (central som visas på fjärrkontrollen) ska detta register ställas på 31.*

5.2.2 Tillgängliga data HC-A(16/64)MB

Offset	Beskrivning	Värden	Läs/skriv	Availability		
				VRF	RAC	ATW
0	Finns	0: No exist	Läs	O	O	
		1: Exist				
1	Systemadress	H-LINK 1: 0~15	Läs	O	O	
2	Enhetsadress	H-LINK 2: 0~63		O	O	
3	Typ	0: Indoor Unit	Läs	O	O	
4	På/av-inställningsordning	0: Stop	Läs/skriv	O	O	
		1: Run				
5	Kommandon för inställningsläge	0: Cool	Läs/skriv	O	O	
		1: Dry				
		2: Fan				
		3: Heat				
		4: Auto				
6	Inställningskommandon för fläkt	0: Low	Läs/skriv	O	O	
		1: Medium				
		2: High				
		3: High2				
		4: Auto				
7	Inställd temperatur	ºC (set according to the unit working range)	Läs/skriv	O	O	
8	Temperature setting with 0.5°C intervals	ºC x 10 (19.5ºC read as 195)	Läs/skriv	O		
9	Heating temperature setting for AUTO Cool/Heat	°C	Läs/skriv	O		
10	Heating Temperature setting for AUTO Cool/heat with 0.5°C intervals	ºC x 10 (19.5ºC read as 195)	Läs/skriv	O		
11	Cooling Temperature setting for AUTO Cool/heat	°C	Läs/skriv	O		
12	Cooling Temperature setting for AUTO Cool/heat with 0.5°C intervals	ºC x 10 (19.5ºC read as 195)	Läs/skriv	O		
13	Spjällinställning	0 ~ 7 (7 is Auto)	Läs/skriv	O		
14	Central setting (2)	Bit 0: On/Off (always can be stopped)	Läs/skriv	O	O	
		Bit 1: Mode				
		Bit 2: Setting Temp				
		Bit 3: Fan				
		Bit4: Louver				
15	On/Off-status	0: Off	Läs	O	O	
		1: On				
16	Statusläge	0: Cool	Läs	O	O	
		1: Dry				
		2: Fan				
		3: Heat				
		4: Auto				

SVENSKA

Offset	Beskrivning	Värden	Läs/skriv	Availability		
				VRF	RAC	ATW
17	Fäktstatus	0: Low 1: Medium 2: High 3: High2 4: Auto	Läs	O	O	
18	Status för temperaturinställning	ºC (set according to the unit working range)	Läs	O	O	
19	Temperature setting with 0.5°C intervals status	ºC x10 (19.5ºC read as 195)	Läs	O		
20	Heating temperature setting for AUTO Cool/Heat status	°C	Läs	O		
21	Heating Temperature setting for AUTO Cool/heat with 0.5°C intervals status	ºC x 10 (19.5ºC read as 195)	Läs	O		
22	Cooling Temperature setting for AUTO Cool/heat status	°C	Läs	O		
23	Cooling Temperature setting for AUTO Cool/heat with 0.5°C intervals status	ºC x 10 (19.5ºC read as 195)	Läs	O		
24	Spjällstatus	0 ~ 7 (7 is Auto)	Läs	O		
25	Air inlet temperature reading	-63ºC ~ 63ºC	Läs	O		
26	Air outlet temperature reading	-63ºC ~ 63ºC	Läs	O		
27	Gas pipe temperature reading	-63ºC ~ 63ºC	Läs	O		
28	Liquid pipe temperature reading	-63ºC ~ 63ºC	Läs	O		
29	Larmkod	Larmenhet från 7-segment	Läs	O	O(1)	
30	Orsak till kompressorstopp	(Läs enhetens servicehandbok)	Läs	O		
31	Inomhusenhetens öppning av expansionsventil	0~100	Läs	O		
32	Enhetens driftsvillkor	0: OFF 1: Thermo OFF 2: Thermo ON 3: Alarm	Läs	O	O	
33	Remote temperature sensor (THM4) value	-63ºC ~ 63ºC	Läs	O		
34	Remote control switch temperature (only when available in the unit)	-63ºC ~ 63ºC	Läs	O	O	
35	Remote control switch configuration	b0: 0 Master/1Slave b1: 0 wih RCS/1 Without RCS	Läs/skriv	O		
36	Fjärrkontrollsgrupp	0: No group 1~255	Läs/skriv	O		
37	CN3 Configuration status	b0: Input 1 open/close b1: Input 2 open/close b2: Enabled/Disabled (Indicates if the unit has CN3 enabled with any function)	Läs	O		

Offset	Beskrivning	Värden	Läs/skriv	Availability		
				VRF	RAC	ATW
38~49	Reserverad					
50	Styrenhet start/stopp	0: Stop 1: Run	Läs/skriv			O
51	Styrenhet läge	0: Cool 1: Heat	Läs/skriv			O
52	Kontrollkrets 1 start/stopp	0: Stop 1: Run	Läs/skriv			O
53	Control Heat. OTC Zone 1	0: No 1: Points 2: Gradient 3: Fix	Läs/skriv			O
54	Control Cool. OTC 1	0: No 1: Points 2: Fix	Läs/skriv			O
55	Control Circuit 1: Water heating Fix Setting Temp	0~80	Läs/skriv			O
56	Control Circuit 1: Water cooling Fix Setting Temp	0~80	Läs/skriv			O
57	Kontrollkrets 1: ECO-läge	0: ECO 1: Comfort	Läs/skriv			O
58	Kontrollkrets 1: Offset-temperatur ECO-värme	1~10	Läs/skriv			O
59	Control Circuit 1: Cool ECO Offset Temperature	1~10	Läs/skriv			O
60	Control Circuit 1: External MBS/KNX Thermostat Available	0: Not Available 1: Available	Läs/skriv			O
61	Control Zone 1: Thermostat Setting	0~65535	Läs/skriv			O
62	Control Zone 1: Room Ambient Temperature	-32667~32667	Läs/skriv			O
63	Control Circuit 2 Run/Stop	0: Stop 1: Run	Läs/skriv			O
64	Control Heat. OTC Zone 2	0: No 1: Points 2: Gradient 3: Fix	Läs/skriv			O
65	Control Cool. OTC Zone 2	0: No 1: Points 2: Fix	Läs/skriv			O
66	Control Circuit 2: Water heating Fix Setting Temp	0~80	Läs/skriv			O
67	Control Circuit 2: Water cooling Fix Setting Temp	0~80	Läs/skriv			O
68	Control Circuit 2: Eco mode	0: ECO 1: Comfort	Läs/skriv			O
69	Control Circuit 2: Heat ECO Offset Temperature	1~10	Läs/skriv			O

Offset	Beskrivning	Värden	Läs/skriv	Availability		
				VRF	RAC	ATW
70	Control Circuit 2: Cool ECO Offset Temperature	1~10	Läs/skriv			O
71	Control Circuit 2: External MBS/KNX Thermostat Available	0: Not Available 1: Available	Läs/skriv			O
72	Control Zone 2: Thermostat Setting	0~65535	Läs/skriv			O
73	Control Zone 2: Room Ambient Temperature	-32667~32667	Läs/skriv			O
74	Styrning varmvattentank start/stopp	0: Stop 1: Run	Läs/skriv			O
75	Styrning varmvattentank inställningstemperatur	0~80	Läs/skriv			O
76	Kontroll DHW-boost	0: No request 1: Request	Läs/skriv			O
77	Reserverad					
78	Kontroll av DHW-behovsläge	0: Standard 1: High demand	Läs/skriv			O
79	Kontroll swimmingpool start/stopp	0: Stop 1: Run	Läs/skriv			O
80	Styrenhet pool inställningstemperatur	0~80	Läs/skriv			O
81	Antilegionella-kontroll kör/stopp	0: Stop 1: Run	Läs/skriv			O
82	Antilegionella-kontroll inställningstemperatur	0~80	Läs/skriv			O
83	Styrning meny för blockering/ avblockering	0: No 1: Block (user cannot access the menu)	Läs/skriv			O
84	Control Yutaki Forced OFF	0: Normal Operation 1: Forced OFF	Läs/skriv			O
85	Space Heating Heater Forced OFF	0: Normal Operation 1: Heater Forced OFF	Läs/skriv			O
86	Styrning fel/larm	0: No 1: Alarm	Läs/skriv			O
87~99	Reserverad					
100	Status enhet start/stopp	0: Stop 1: Run	Läs			O
101	Status Mode	B0: 0: Cool / 1: Heat B1: 0: Normal / 1: Auto	Läs			O
102	Kretsstatus 1 start/stopp	0: Stop 1: Run	Läs			O
103	Status Heat. OTC 1	0: No 1: Points 2: Gradient 3: Fix	Läs			O
104	Status Cool. OTC 1	0: No 1: Points 2: Fix	Läs			O

Offset	Beskrivning	Värden	Läs/skriv	Availability		
				VRF	RAC	ATW
105	Status Circuit 1: Water heating Fix Setting Temp	0~80	Läs			O
106	Status Circuit 1: Water cooling Fix Setting Temp	0~80	Läs			O
107	Status Circuit 1: Eco mode	0: ECO 1: Comfort	Läs			O
108	Status Circuit 1: Heat ECO Offset Temperature	1~10	Läs			O
109	Status Circuit 1: Cool ECO Offset Temperature	1~10	Läs			O
110	Status Circuit 1: Thermostat Setting Temperature	50~350 (5,0~35,0)	Läs			O
111	Status Circuit 1: Thermostat Room Temperature	0~1000 (0,0~100,0)	Läs			O
112	Status Circuit 1: Wireless Setting Temperature	50~350 (5,0~35,0)	Läs			O
113	Status krets 1: Trådlös rumstemperatur	0~1000 (0,0~100,0)	Läs			O
114	Status Circuit 2 Run/Stop	0: Stop 1: Run	Läs			O
115	Status uppvärmning OTC 2	0: No 1: Points 2: Gradient 3: Fix	Läs			O
116	Status kylning OTC 2	0: No 1: Points 2: Fix	Läs			O
117	Status Circuit 2: Water heating Fix Setting Temp	0~80	Läs			O
118	Status Circuit 2: Water cooling Fix Setting Temp	0~80	Läs			O
119	Status krets 2: ECO-läge	0: ECO 1: Comfort	Läs			O
120	Status Circuit 1: Heat ECO Offset Temperature	1~10	Läs			O
121	Status Circuit 1: Cool ECO Offset Temperature	1~10	Läs			O
122	Status Zone 2: Thermostat Setting	50~350 (5,0~35,0)	Läs			O
123	Status Zone 2: Ambient Temperature	0~1000 (0,0~100,0)	Läs			O
124	Status krets 2: Trådlös inställningstemperatur	50~350 (5,0~35,0)	Läs			O
125	Status Circuit 2: Wireless Room temperature	0~1000 (0,0~100,0)	Läs			O
126	Status varmvattentank start/stopp	0: Stop 1: Run	Läs			O
127	Status DHW-tank inställningstemperatur	0~80	Läs			O

Offset	Beskrivning	Värden	Läs/skriv	Availability		
				VRF	RAC	ATW
128	Status DHW Boost	0: Disable 1: Enable	Läs			O
129	Reserverad					
130	Status DHW-behovsläge	0: Standard 1: High demand	Läs			O
131	Status DHW Temperature	-80~100	Läs			O
132	Status pool kör/stopp	0: Stop 1: Run	Läs			O
133	Status Swim. Pool Setting Temperature	0~80	Läs			O
134	Status Swim. Pool Temperature	-80~100	Läs			O
135	Status AntiLeg. Run/Stopp	0: Stop 1: Run	Läs			O
136	Status antileg. inställningstemperatur	0~80	Läs			O
137	Status meny för blockering/ avblockering	0: No 1: Block	Läs			O
138	Status fel/larm	0: No 1: Alarm	Läs			O
139	LCD centralt läge	0: Local 1: Air (Not available for Yutampo) 2:Water (Not available for Yutampo) 3: Full	Läs			O
140	Systemkonfiguration	b0: Zone 1 Heating Available b1: Zone 2 Heating Available b2: Zone 1 Cooling Available b3: Zone 2 Cooling Available b4: DHWT Available b5: SWP Available b6: Room thermostat available Zone 1 b7: Room thermostat available Zone 2 b8: Wireless Setting C1 b9: Wireless Setting C2 b10: Wireless Room Temperature C1 b11: Wireless Room Temperature C2 b12: Slave Unit	Läs			O

Offset	Beskrivning	Värden	Läs/skriv	Availability		
				VRF	RAC	ATW
141	Driftstatus	0: OFF 1: Cool Demand –OFF 2: Cool Thermo-OFF 3: Cool Thermo-ON 4: Heat Demand-OFF 5: Heat Thermo-OFF 6: Heat Thermo-ON 7: DHW-OFF 8: DHW-ON 9: SWP-OFF 10: SWP-ON 11: Alarm	Läs			O
142	Outdoor Ambient T° (Outdoor ambient temperature)	-80~100	Läs			O
143	Water Inlet T° (Water Inlet unit temperature)	-80~100	Läs			O
144	Vattenuttag T° (Water outlet unit temperature)	-80~100	Läs			O
145	H-Link Communication State	0: No alarm 1: There is no communication with RCS or Yutaki unit during more than 180 seconds 2: Data initialization	Läs			O
146	Programvara PCB		Läs			O
147	Programvara LCD		Läs			O
148	Enhetens kapacitet		Läs			O
149	Unit Power Consumption		Läs			O
150	Water Outler HP (TwoHP)	0~100 Endast för YUTAKI S och S Combi	Läs			O
151	Ta1av: Outdoor Unit Ambient Average Temperature	-80~100	Läs			O
152	Ta2: Second Ambient Temperature (inst)	-80~100	Läs			O
153	Ta2av: Second Ambient Temperature (avg)	-80~100				O
154	O2: Water outlet Temp 2 (Two2)	-80~100	Läs			O
155	O3: Water outlet Temp 3 (Two3)	-80~100	Läs			O
156	Tg: Gas Temperature (THMg)	-80~100	Läs			O
157	Tl: Liquid Temperature (THMl)	-80~100	Läs			O
158	EVI: Indoor expansion valve openning	0~100	Läs			O
159	CD: Capacity Data		Läs			O
160	Mixing Valve Opening	0~100	Läs			O
161	Avfrostning	0: No defrosting 1: Defrosting	Läs			O

Offset	Beskrivning	Värden	Läs/skriv	Availability		
				VRF	RAC	ATW
162	Enhetsmodell.	0: Yutaki S 1: Yutaki SC 2: Yutaki S80 3: Yutaki M 4: Yutaki SC Lite (New) 5: Yutampo (New) 6: YCC (New)	Läs			O
163	Th: Water Temp Setting (Ttwo)	-80~100	Läs			O
164	Vattenflöde	Water Flow [0.1m3/h]	Läs			O
165	Pump Speed	0~100	Läs			O
166	Systemstatus 2	Bit 0: Defrost Bit 1: Solar Bit 2: Water Pump 1 Bit 3: Water Pump 2 Bit 4: Water Pump 3 Bit 5: Compressor ON Bit 6: Boiler ON Bit 7: DHW Heater Bit 8: Space Heater Bit 9: Smart function input enabled Bit10: Forced OFF Bit11: DHW recirculation Pump State Bit12: Solar Pump Output State	Läs			O
167	Larmnr.	0: Alarm XXX: Alarm number	Läs			O
168	Utloppstemperatur R134a		Läs			O
169	Sugtemperatur R134a		Läs			O
170	Utloppstryck R134a		Läs			O
171	Sugtryck R134a		Läs			O
172	Kompressorfrekvens R134a		Läs			O
173	Öppning till expansionsventil inomhus R134a		Läs			O
174	Kompressor aktuellt värde R134a		Läs			O
175	Kod för återförsök R134a		Läs			O
176	R134 Te SH		Läs			O
177	R134 Secondary Current		Läs			O
178	R134 Stop Code		Läs			O
179~ 189	Reserverad					
190	YCC - Enabled Units	0~8	Läs			O
191	YCC - Working Units	0~8	Läs			O

Offset	Beskrivning	Värden	Läs/skriv	Availability		
				VRF	RAC	ATW
192	YCC - Required Units	0~8	Läs			O

NOTE

- *Register address is calculated as: 5000+(Modbus_Id*200)+offset*
- *Modbus_Id as configured by configuration software*
- *For VRF / Package units, only the relevant data are available (heating units registers will not give any value). The situation is the same for heating units (registers related to air/air units will not give any value).*
- *Availability:*
  - PAC: VRF and package units.
  - RAC: Domestic units connected to the H-link via PSC-6RAD or SPX-RAMHLK
  - ATW: Air to water units.
- *(1) Take into account only if it is different from zero.*
- *(2) Bit 0 (ON/OFF) and Bit 4 (Louver) selectable only when all centrals are actived.*
- *In order to full lock setting from RCS (Central shown in RCS) set this register to 31*

5.3 UTOMHUSENHETER

Some state registers about outdoor unit have been added. Using these registers it is now possible to know the status of the refrigerant cycle. Some control registers have also been added.

Offset	Beskrivning	Värden	Läs/skriv
0	Outdoor Air Temperature	-63ºC ~ 63ºC	Läs
1	Compressor Discharge Temperature	0 ~ 200 ºC	Läs
2	Heating Evaporating Temperature		Läs
3	Number of operating Compressor		Läs
4	Utloppstryck	0.0 ~ 5.0 MPa (0.1 MPa)	Läs
5	Sugtryck	-0.2 ~2.0MPa (0.1 MPa or 0.01MPa depending unit)	Läs
6	Total Current	0 ~ 255 A	Läs
7	Total Real Frequency	0 ~ 255 Hz	Läs
8	EVO1	0 ~ 100 %	Läs
9	EVO2 / Hot Bypass	0 ~ 100 %	Läs
10	EVB	0 ~ 100 %	Läs
11	Outdoor Unit Option Enabled	0: Disable	Läs/skriv
		1: Enable (it's possible to use the following options, also if the value of register 16 "Power Level Set" is 1)	
12	Noise Control Enabled	0: Disable	Läs/skriv
		1: Enable (it's possible to send the noise level)	
13	Noise Control Level Set	0~9 (See the service manual of Outdoor unit, function db)	Läs/skriv
14	Power Control Enabled	0: Disable	Läs/skriv
		1: Enable (it's possible to send the power level)	
15	Power Level	0~100%	Läs/skriv
16	Power Level Set	0~100%	Läs
17	Power Level Current Value	0~100%	Läs
18	Power Control Possible	0: Not possible	Läs
		1: Possible	

NOTE

- *Register address is calculated as: 5000+(Modbus_Id*200)+offset*
- *Modbus_Id as configured by configuration software*

5.4 VALFRIA FUNKTIONER

Some optional functions of the indoor units have been added so that they can be managed from the BMS.

Offset	Beskrivning	Värden	Läs/skriv
0	b1 (Heating temperature compensation)	0~4	Läs/skriv
1	b2 (Circulation function at heating Thermo-OFF)	0~1	Läs/skriv
2	b4 (Change of filter cleaning period)	0~4	Läs/skriv
3	c5 (Static pressure selection)	0~2	Läs/skriv
4	c8 (Control by the temperature sensor of the remote control switch)	0~2	Läs/skriv
5	Cb (Selection of forced stoppage logic)	0~1	Läs/skriv
6	Cd (Stop of indoor unit fan during cooling Thermo-OFF conditions)	0~1	Läs/skriv
7	CE (Stop of indoor unit fan during heating Thermo-OFF conditions)	0~1	Läs/skriv
8	d1 (Management of indoor unit operation after a power supply cut off -option 1)	0~1	Läs/skriv
9	d3 (Management of indoor unit operation after a power supply cut off -option 2)	0~1	Läs/skriv
10	d4 (RPI(M) Prevention of low air outlet temperature in cooling mode)	0~1	Läs/skriv
11	d5 (Prevention of low air outlet temperature in heating mode)	0~1	Läs/skriv
12	E1 (KPI: Ventilation mode / Econofresh cooling mode)	0~2	Läs/skriv
13	E2 (KPI: Increase of air supply volume / Econofresh enthalpy Sensor)	0~1	Läs/skriv
14	E4 (KPI: Pre-cooling / preheating period / Econofresh: CO2 sensor)	0~2	Läs/skriv
15	E8 (Control for stop of the indoor unit fan during heating Thermo-OFF conditions (with remote sensor THM-R2AE connected to the THM4 connector in the indoor unit PCB)	0~1	Läs/skriv
16	E9 (Intermittent fan operation in heating stop)	0~1	Läs/skriv
17	Eb (Indoor unit fan control during cooling Thermo-OFF conditions)	0~2	Läs/skriv
18	EE (Control in “Automatic” indoor fan speed mode)	0~1	Läs/skriv
19	EF (Control in “Automatic” indoor fan speed mode (supporting High H))	0~1	Läs/skriv
20	H4 (KPI: Operation modes for the ventilation unit with energy recovery)	0~1	Läs/skriv
21	K5 (Detection level of the motion sensor kit)	0~2	Läs/skriv
22	K6 (Selection of allowed operation modes when the control sensor of the indoor unit is set by C8 function)	0~3	Läs/skriv

NOTE

- *Register address is calculated as: 40000+(Modbus_Id*100)+offset*
- *Modbus_Id as configured by configuration software*

5.5 LISTA ÖVER LARMKODER

Adress 19 visar larmkoden som visas i inomhusenheten. Se servicehandbok för larmförklarning och reparationsåtgärd vid inomhus- eller utomhuslarm.

5.6 FELSÖKNING

LARMKOD	BESKRIVNING	ÅTGÄRD
LED2 blinkar	Onormal drift	Slå av enhetens ström och återanslut den igen efter 5 sekunder. Om LED2 fortfarande blinkar bör du kontakta HITACHIs kundservice.

6 KIT FÖR NÄTKONFIGURERING

Detta tillbehör tillhandahåller alla de kablar som Hitachi-installatörer behöver för driftsättning av en Modbus-installation.

Komponentlista:

USB -kabel		Korsad Ethernet-kabel		USB-minne	
1x		1x		1x	

I USB-minnet ingår ett mjukvaruverktyg som bör kontrolleras vid driftsättning av Modbus-kommunikation.

USB-kabeln behövs endast under konfigueringen av enheten (nätverksparametrar)

Den medföljande Ethernetkabeln används för att snabbkontrollera Modbus-kommunikationen genom att ansluta den till en laptop.

1 ΟΔΗΓΟΣ ΠΡΟΪΟΝΤΟΣ

1.1 ΔΙΑΒΑΘΜΙΣΗ ΤΩΝ ΜΟΝΑΔΩΝ

Έλεγχος ελεγκτή διασύνδεσης	Διαχωρισμός με παύλα	Συμβατότητα με H-LINK II	Μέγιστος αριθμός μονάδων που ελέγχονται (8/16/64)	MB: Modbus gateway NET: Gateway για CSNET Manager
HC	-	A	X	X

1.2 ΜΟΝΤΕΛΑ

ΠΕΡΙΓΡΑΦΗ
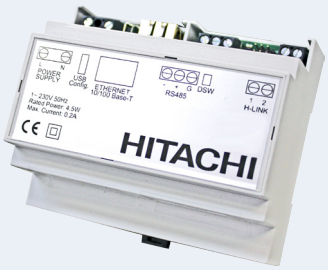
HC-A8MB
HC-A16MB
HC-A64MB
HC-A64NET

1.3 ΛΙΣΤΑ ΑΞΕΣΟΥΑΡ

ΠΕΡΙΓΡΑΦΗ
Κιτ διαμόρφωσης δικτύου

2 ΓΕΝΙΚΑ ΔΕΔΟΜΕΝΑ ΝΕΟΥ ΠΡΟΪΟΝΤΟΣ

2.3.1 Προδιαγραφές υλικού

Στοιχείο	Προδιαγραφές
Τροφοδοσία ηλεκτρικού ρεύματος	1~ 230 V ±10% 50 Hz
Κατανάλωση	4,5W (μέγιστο)
Εξωτερικές διαστάσεις	Πλάτος: 106 mm, Βάθος: 90 mm, Ύψος: 58 mm
Βάρος	165 g
Συνθήκες συναρμολόγησης	Εσωτερικός χώρος (εγκατάσταση μέσα σε περίβλημα που η πρόσβαση γίνεται με ένα εργαλείο)
Θερμοκρασία περιβάλλοντος	0~60 ºC
Υγρασία	20~85% (χωρίς συμπύκνωση)

2.3.2 Επικοινωνία

◆ RS485

Στοιχείο	Προδιαγραφές
Τύπος	Modbus RTU για HC-A(8/16/64)MB
	Μη διαθέσιμο για HC-A64NET
Ακροδέκτης	Σειριακή θύρα RS485 (3 βιδωτά κλέμα)
Γραμμή επικοινωνίας	θωρακισμένο καλώδιο συνεστραμμένου ζεύγους, με τρίτο καλώδιο (για το κοινό), με πολικότητα.
Σύστημα επικοινωνίας	Ημι-αμφίδρομη, πολυσημειακή σειριακή σύνδεση
Μέθοδος επικοινωνίας	Χωρίς ισοτιμία ή επιλογή περιττής/άρτιας ισοτιμίας Μήκος δεδομένων: 8 bits - 1 bit διακοπής
Μετάδοση ρυθμού σε baud	19,200/9,600 Baud
Μήκος	Μεγ. 1200 m κατά EIA-485

◆ Ethernet

Στοιχείο	Προδιαγραφές
Τύπος	Modbus TCP για HC-A(8/16/64)MB
	TCP/IP επικοινωνία για HC-A64NET
Ακροδέκτης	Ethernet (RJ45)
Γραμμή επικοινωνίας	Δύο καλώδια συνεστραμμένου ζεύγους CAT5 ή καλύτερα (T-568A/T-568B)
Σύστημα επικοινωνίας	Πλήρως αμφίδρομο
Μήκος	Μεγ. 100 m κατά IEEE 802.3

◆ H-LINK

Στοιχείο	Προδιαγραφές
Επικοινωνία με	HC-A(16/64)MB: SET FREE, UTOPIA, CENTRIFUGAL ΚΑΙ ΘΕΡΜΑΝΣΗ συστήματα
	HC-A8MB και HC-A64NET: SET FREE, UTOPIA και CENTRIFUGAL συστήματα
Γραμμή επικοινωνίας	Θωρακισμένο καλώδιο συνεστραμμένου ζεύγους, χωρίς πολικότητα
Σύστημα επικοινωνίας	Ημι-αμφίδρομη
Μέθοδος επικοινωνίας	Ασύγχρονη
Ταχύτητα μετάδοσης	9.600 Baud
Μήκος καλωδίωσης	1000 m μέγιστο (συνολικό μήκος του διαύλου HLINK I/O)
Μέγιστος αριθμός gateway	1 Gateway (HC-A(8/16/64)MB) / H-LINK ΣΥΣΤΗΜΑ
Μέγιστος αριθμός εσωτ. μονάδων	HC-A64MB → έως 64 * Εσωτερικές μονάδες
	HC-A16MB → έως 16 * Εσωτερικές μονάδες
	HC-A8MB → έως 8 * Εσωτερικές μονάδες
	HC-A64NET → έως 64 * Εσωτερικές μονάδες

3 ΕΓΚΑΤΑΣΤΑΣΗ

3.1 ΣΥΝΟΨΗ ΑΣΦΑΛΕΙΑΣ

⚠ ΚΙΝΔΥΝΟΣ

- ***Διαβάστε αυτό το εγχειρίδιο προσεκτικά, προτού εκτελέσετε την εγκατάσταση.***
- ***Μην εγκαθιστάτε αυτήν τη συσκευή σε χώρους όπου έχει πρόσβαση το ευρύ κοινό. Εγκαταστήστε την σε ηλεκτρικά περιβλήματα, τα όποια είναι προσβάσιμα με τη χρήση ενός εργαλείου και επίσης παρέχεται προστασία από τυχόν ηλεκτρομαγνητικές παρεμβολές.***
- ***Μην συνδέετε την τροφοδοσία ρεύματος προτού ολοκληρωθεί σωστά η εγκατάσταση της συσκευής. Πάντα να αποσυνδέετε την τροφοδοσία ρεύματος από τη συσκευή προτού προχωρήσετε σε οποιαδήποτε εργασία συντήρησης ή σέρβις.***

⚠ ΠΡΟΣΟΧΗ

- *Αυτή η συσκευή μπορεί να χρησιμοποιηθεί μόνο από ενήλικα και ικανό άτομο, το οποίο έχει λάβει τις τεχνικές πληροφορίες ή οδηγίες για τον σωστό χειρισμό αυτής της συσκευής.*
- *Αυτό είναι ένα προϊόν της Κατηγορίας Α. Σε ένα οικιακό περιβάλλον αυτό το προϊόν μπορεί να προκαλέσει ραδιοηλεκτρικά παράσιτα και σε αυτήν την περίπτωση ο χρήστης μπορεί να χρειάζεται να λάβει τα κατάλληλα μέτρα.*
- *Τα παιδιά θα πρέπει να επιτηρούνται και να μην παίζουν με τη συσκευή.*
- *Βεβαιωθείτε ότι τα μη παρεχόμενα ηλεκτρικά εξαρτήματα (κύριοι διακόπτες τροφοδοσίας, διακόπτες κυκλώματος, καλώδια, συνδέσεις αγωγών και ακροδέκτες καλωδίων) έχουν επιλεγεί σύμφωνα με τα ηλεκτρικά στοιχεία που αναφέρονται σε αυτό το κείμενο και πληρούν τους εθνικούς και τοπικούς κανονισμούς. Αν χρειάζεται, επικοινωνήστε με τους τοπικούς φορείς όσον αφορά τα πρότυπα, τους κανόνες, κανονισμούς, κλπ.*
- *Μην εγκαθιστάτε Network / Modbus gateways σε χώρους:*
  - *όπου μπορεί να επηρεάσει τη συσκευή κάθε είδους ατμός, λάδι ή άλλο διασκορπισμένο υγρό.*
  - *όπου έχει παρατηρηθεί συγκέντρωση, δημιουργία ή διαρροή εύφλεκτων αερίων.*
  - *κοντά σε πηγές θερμότητας ή πηγές ηλεκτρομαγνητικού θορύβου.*
  - *που βρίσκονται κοντά στη θάλασσα, σε αλατούχο, όξινο ή αλκαλικό περιβάλλον.*

3.2 ΕΞΑΡΤΗΜΑΤΑ ΠΑΡΕΧΟΜΕΝΑ ΑΠΟ ΤΟ ΕΡΓΟΣΤΑΣΙΟ

Συσκευή Gateway		Εγχειρίδιο οδηγιών		Μνήμη USB	
1x	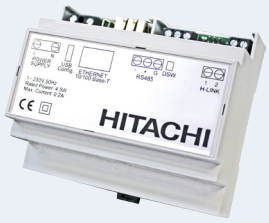	1x		1x	

3.3 ΣΤΟΙΧΕΙΑ ΔΙΑΣΤΑΣΕΩΝ

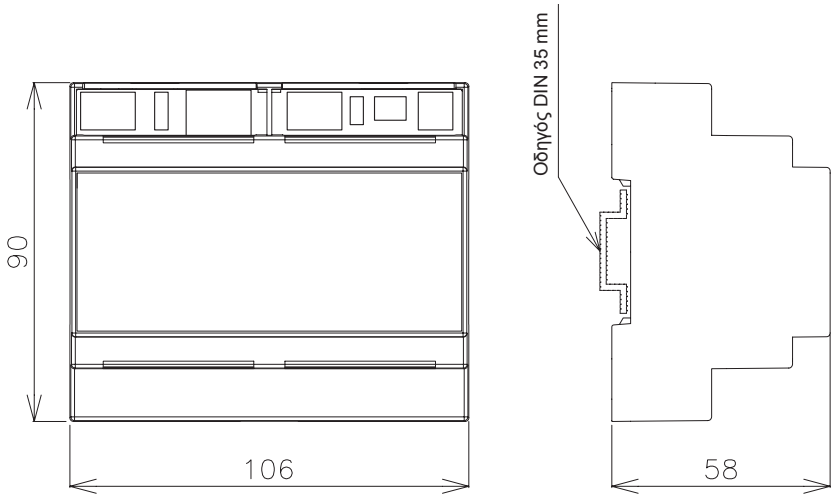

3.4 ΠΕΡΙΓΡΑΦΗ ΤΩΝ ΕΞΑΡΤΗΜΑΤΩΝ

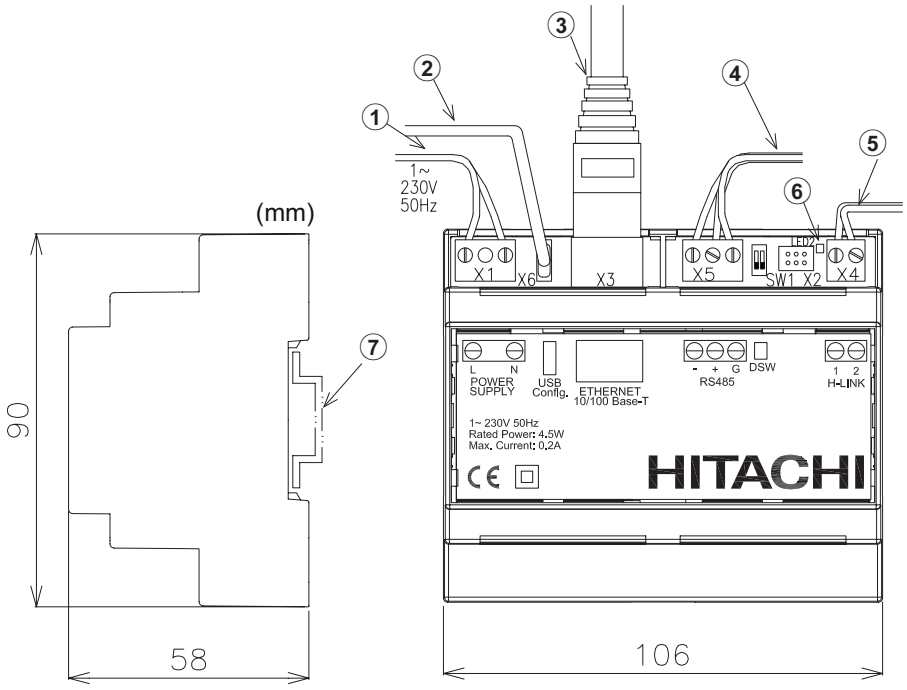

Αρ.	Περιγραφή
1	Εξωτερική τροφοδοσία ρεύματος
2	Καλώδιο USB μόνο για το χρόνο διαμόρφωσης
3	RJ45 Ethernet HC-A(8/16/64)MB: Modbus TCP HC-A64NET : TCP/IP
4	RS485 Modbus RTU για HC-A(8/16/64)MB Μη διαθέσιμο για HC-A64NET
5	H-LINK - Δίαυλος επικοινωνίας με μονάδες Hitachi
6	Λυχνία ένδειξης λειτουργίας
7	Οδηγός DIN 35 mm για συναρμολόγηση μέσα στο ηλεκτρικό κουτί

3.5 ΧΩΡΟΣ ΕΓΚΑΤΑΣΤΑΣΗΣ

Διατηρήστε καθαρή την γκρι περιοχή για τη σωστή λειτουργία της συσκευής.

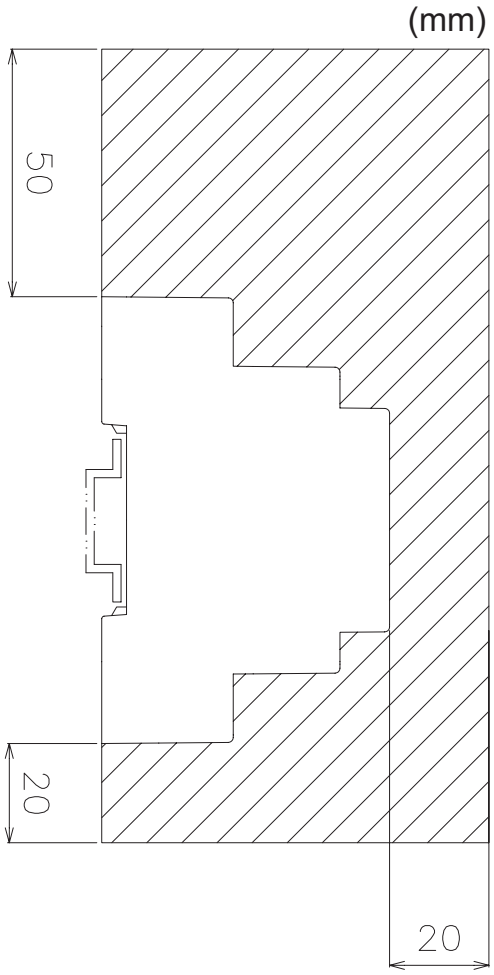

3.6 ΔΙΑΔΙΚΑΣΙΑ ΕΓΚΑΤΑΣΤΑΣΗΣ

⚠ ΚΙΝΔΥΝΟΣ

- ***Μην εγκαθιστάτε αυτή τη συσκευή σε χώρους στους οποίους έχει πρόσβαση το ευρύ κοινό. Εγκαταστήστε την με περιφράγματα ή σε χώρους στους οποίους η πρόσβαση γίνεται μόνο με τη χρήση ενός εργαλείου.***
- ***Μην συνδέετε την τροφοδοσία ρεύματος προτού ολοκληρωθεί σωστά η εγκατάσταση της συσκευής. Πάντα να αποσυνδέετε την τροφοδοσία ρεύματος από τη συσκευή προτού προχωρήσετε σε οποιαδήποτε εργασία συντήρησης ή σέρβις***

⚠ ΠΡΟΣΟΧΗ

- *Βεβαιωθείτε ότι τα μη παρεχόμενα ηλεκτρικά εξαρτήματα (κύριοι διακόπτες τροφοδοσίας, διακόπτες κυκλώματος, καλώδια, συνδέσεις αγωγών και ακροδέκτες καλωδίων) έχουν επιλεγεί σύμφωνα με τα ηλεκτρικά στοιχεία που αναφέρονται σε αυτό το κείμενο και πληρούν τους εθνικούς και τοπικούς κανονισμούς.*
- *Εάν κάποια μονάδα δεν είναι συνδεδεμένη ή δεν έχει τροφοδοσία ρεύματος όταν ενεργοποιήσετε το Network / Modbus gateways, η μονάδα δεν θα αναγνωριστεί και θα πρέπει να ρυθμιστεί αργότερα.*
  - *Πριν από την τροφοδοσία ρεύματος και την ενεργοποίηση των Network / Modbus gateways, πρέπει να βεβαιωθείτε ότι:*
    - ◆ *1. Όλα τα κυκλώματα προς σύνδεση έχουν τοποθετηθεί σωστά.*
    - ◆ *2. Έχουν γίνει όλες οι συνδέσεις H-Link.*
    - ◆ *3. Η σύνδεση Modbus έχει πραγματοποιηθεί σωστά.*
- *Τα καλώδια σήματος θα πρέπει έχουν το μικρότερο δυνατό μήκος. Να κρατάτε μια απόσταση μεγαλύτερη από 150 mm από άλλα καλώδια ρεύματος. Μην τα συνδέετε μεταξύ τους (αν και μπορεί να διασταυρώνονται). Εάν θα πρέπει οπωσδήποτε να εγκατασταθούν μαζί, λάβετε τα παρακάτω μέτρα ώστε να αποφύγετε τις παρεμβολές θορύβου:*
  - *Για την επικοινωνία, να χρησιμοποιείτε θωρακισμένο καλώδιο με γείωση στην μια πλευρά.*

3.7 ΔΙΑΜΟΡΦΩΣΗ ΔΙΚΤΥΟΥ

Παρέχεται ένα λογισμικό υπολογιστή, εργαλείο για τη διαμόρφωση δικτύου, μέσα στη μνήμη USB για απλή και εύκολη διαμόρφωση.

3.7.1 Απαιτήσεις υπολογιστή.

Χρειάζεται να χρησιμοποιήσετε έναν προσωπικό υπολογιστή με Microsoft Windows 7 ή άνω, μια ελεύθερη θύρα USB και Java.

3.7.2 Παράμετροι υπό διαμόρφωση:

- *Ισοτιμία: Περιττή/Άρτια/Απενεργοποιημένη*
- *Ταχύτητα επικοινωνίας: 9600/19200 Bps*
- *Διεύθυνση Modbus*
- *Modbus TCP IP*

3.7.3 Διαδικασία διαμόρφωσης

◆ Διαμόρφωση μέσω θύρας USB

Αυτή η μέθοδος χρειάζεται όταν το IP της συσκευής είναι μη αναγνωρίσιμο

1 Συνδέστε τη συσκευή δικτύου σε ένα υπολογιστή με ένα καλώδιο USB (τομέα που παρέχονται ή διατίθενται με το κιτ διαμόρφωση δικτύου)

2 Επιλέξτε την θύρα επικοινωνίας του υπολογιστή.

3 Πατήστε το κουμπί στην οθόνη

◆ Διαμόρφωση μέσω θύρας Ethernet

1 Συνδέστε τη συσκευή δικτύου σε ένα υπολογιστή με ένα καλώδιο ethernet (τομέα που παρέχονται ή διατίθενται με το κιτ διαμόρφωση δικτύου ή το CSNET MANAGER)

2 Είσοδος των παρακάτω παραμέτρων:

- Διεύθυνση IP: 192.168.0.4
- Θύρα: Modbus Gateway/ HC-A64NET

3 Πατήστε το κουμπί στην οθόνη

◆ Διαμόρφωση της συσκευής και της επικοινωνίας

HC-A(8/16/64)MB

HC-A64NET

“Πληροφορίες συσκευής”

Ελέγξτε αν εμφανίζεται σωστά η συσκευή δικτύου στον πίνακα “Πληροφορίες συσκευής”. Πατήστε το κουμπί ανανέωσης, αν χρειάζεται.

“Πληροφορίες δικτύου”

Όταν η συσκευή δικτύου ενσωματώνεται στο δίκτυο LAN / Modbus μέσω Ethernet, ρυθμίστε τις παρακάτω παραμέτρους:

- Διεύθυνση IP: Επιτρέψτε την τροποποίηση του IP της θύρας για τη συσκευή δικτύου (“192.168.0.4” από προεπιλογή).
- Mask: Ρωτήστε τον τεχνικό υπολογιστών για τη κατάλληλη τιμή (“255.255.255.0” από προεπιλογή).
- Gateway: LAN gateway διεύθυνση (“192.168.0.1” από προεπιλογή)

“Πληροφορίες σειριακής”

Όταν η συσκευή δικτύου ενσωματώνεται στο δίκτυο LAN / Modbus μέσω σειριακής θύρας RS485, ρυθμίστε τις παρακάτω παραμέτρους:

- RS485: 9600 / 19200 Bps (“19200” Bps από προεπιλογή)
- RS485: Κανενα /Περιττή/ Άρτια ισοτιμία (“Άρτια” από προεπιλογή)
- Modbus Id: 1~128 (“1” από προεπιλογή)
- Πόλωση: Πόλωση επικοινωνίας (“απενεργοποιημένο” από προεπιλογή)

ΣΗΜΕΙΩΣΗ

Αυτό το τμήμα δεν είναι διαθέσιμο για το HC-A64NET

“Διαμόρφωση Id μονάδων”

- Η αυτόματη διεύθυνση μπορεί να πραγματοποιηθεί με πίεση
- Η μη αυτόματη διαμόρφωση διεύθυνσης μπορεί να πραγματοποιηθεί με την παραχώρηση κάθε Id σε μια συγκεκριμένη διεύθυνση H-LINK
  - *Διεύθυνση εξωτερικής μονάδας (Ou) και διεύθυνση εσωτερικής μονάδας (Iu)*

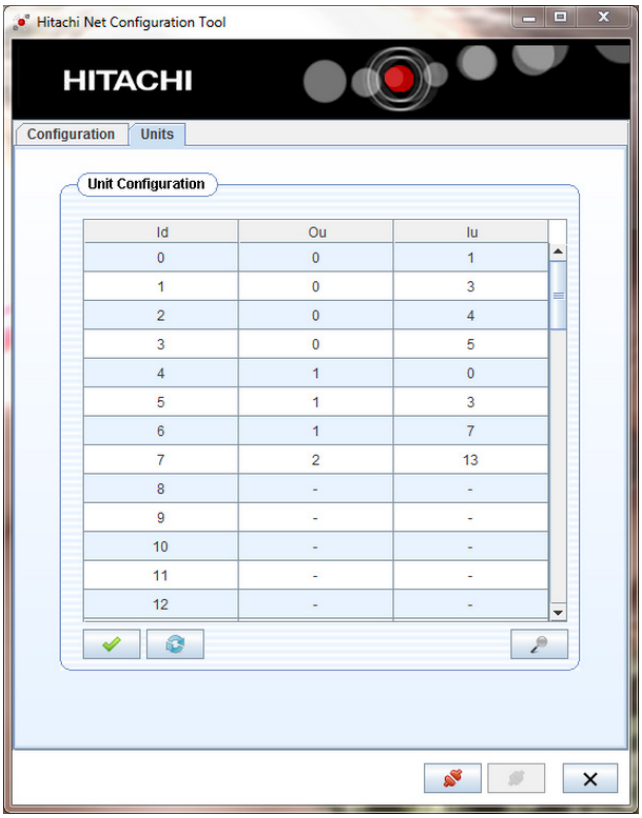

Id	Ou	Iu
0	0	1
1	0	3
2	0	4
3	0	5
4	1	0
5	1	3
6	1	7
7	2	13
8	-	-
9	-	-
10	-	-
11	-	-
12	-	-

- Επιβεβαιώστε τη διαμόρφωση πατώντας
- Το κουμπί ανανέωσης πρέπει να πατηθεί όταν τροποποιούνται οι μονάδες που είναι συνδεδεμένες στο δίκτυο

ΣΗΜΕΙΩΣΗ

Αυτό το τμήμα δεν είναι διαθέσιμο για το HC-A64NET

4 ΗΛΕΚΤΡΙΚΗ ΚΑΛΩΔΙΩΣΗ

Όνομα	Σύνδεση	Προδιαγραφές καλωδίου
X1	Τροφοδοσία ρεύματος (1)	Χρησιμοποιείτε καλώδια 0,75 mm2 που δεν είναι ελαφρύτερα από το σύνηθες θωρακισμένο εύκαμπτο καλώδιο πολυχλωροπρενίου (τύπου 60245 IEC 57)
X3	Ethernet (1)	Καλώδια LAN Κατηγορίας 5 ή ανώτερη Σύνδεση Η/Υ: Χρησιμοποιήστε ένα ανεστραμμένο καλώδιο (1 σετ καλωδίων διαθέσιμο στο κιτ διαμόρφωση δικτύο) για απευθείας σύνδεση. Σύνδεση LAN: Χρησιμοποιείστε ένα άμεσο καλώδιο (μη παρεχόμενο) για τη σύνδεση με διανομέα του εμπορίου (Hub).
X4	H-LINK (1)	Θωρακισμένο καλώδιο συνεστραμμένου ζεύγους 0,75 mm². Η θωράκιση πρέπει να είναι γειωμένη μόνο στη μία πλευρά.
X5	RS485 (1)	3-κλωνη καλωδίωση 0,75 mm² γειωμένη μόνο στη μία πλευρά. Χρησιμοποιήστε διαφορετικό χρώμα για κάθε καλώδιο.
X6	USB (1)	USB Μίνι-Β καλώδιο πρίζας (1 σετ καλωδίων διαθέσιμο στο κιτ διαμόρφωση δικτύου)

ΣΗΜΕΙΩΣΗ

(1) Αυτά τα καλώδιο πρέπει δεν παρέχονται από το εργοστάσιο.

4.1 ΔΙΑΜΟΡΦΩΣΗ DSW

Όνομα	Λειτουργία	Εργοστασιακή ρύθμιση	Περιγραφή
SW1	Ρύθμιση		SW1-1: Modbus τερματική αντίσταση (*). SW1-2: Δεν χρησιμοποιείται (πάντα να διατηρείται “ON”)

ΣΗΜΕΙΩΣΗ

(*) Δεν ισχύει για το HC-A64NET.

5 ΛΕΙΤΟΥΡΓΙΑ

5.1 ΣΥΜΒΑΤΟΤΗΤΑ

Αυτές οι συσκευές δεν είναι συμβατές με κανέναν από τους παρακάτω ελεγκτές Hitachi:

- *Κεντρικό χειριστήρια*
- *Χειριστήρια κλιματισμού για κτίρια (*)*
- *Άλλα Hitachi BMS Gateways (LONWORKS, BACNET, KNX, FIDELIO)*
- *Άλλα Hitachi MODBUS Gateways*
- *Άλλες μονάδες του ίδιου μοντέλου*

ΣΗΜΕΙΩΣΗ

(*) HC-A64NET είναι συμβατό με CSNET Manager.

5.2 ΕΣΩΤΕΡΙΚΕΣ ΜΟΝΑΔΕΣ

5.2.1 Διαθέσιμα δεδομένα HC-A (8/16/64)MB

Offset (1)	Όνομα	Περιγραφή	Τιμές	Ανάγνωση/Εγγραφή
0	EXIST	Υπάρχει	0: Δεν υπάρχει 1: Υπάρχει	Ανάγνωση
1	SYSTEM_ADDRESS	Διεύθυνση συστήματος	0~63	Ανάγνωση
2	UNIT_ ADDRESS	Διεύθυνση μονάδας		
3	SET_ONOFF	Εντολή ρύθμισης On/Off	0: Διακοπή 1: Λειτουργία	Ανάγνωση/Εγγραφή
4	SET_MODE	Σειρά ρύθμισης κατάστασης λειτουργίας	0: Ψύξη 1: Αφύγρανση 2: Ανεμιστήρας 3: Θέρμανση 4: Αυτόματο	Ανάγνωση/Εγγραφή
5	SET_FAN	Σειρά ρύθμισης ανεμιστήρα	0: Χαμηλή 1: Μεσαία 2: Υψηλή 3: High2 4: Αυτόματο	Ανάγνωση/Εγγραφή
6	SET_TSET	Ρύθμιση θερμοκρασίας	ºC (Ρυθμίστε σύμφωνα με το εύρος λειτουργίας της μονάδας)	Ανάγνωση/Εγγραφή
7	SET_LOUVER	Ρυθμίσεις περσίδας	0 ~ 7 (το 7 είναι στην αυτόματη λειτουργία)	Ανάγνωση/Εγγραφή
8	SET_CENTRAL	Κεντρική ρύθμιση (3)	Bit 0: On/Off (μπορεί πάντα να σταματήσει) Bit 1: Κατάσταση Bit 2: Ρύθμιση θερμοκρασίας Bit 3: Ανεμιστήρας Bit 4: Περσίδα	Ανάγνωση/Εγγραφή
9	READ_ONOFF	Κατάσταση On/Off	0: Off 1: On	Ανάγνωση
10	READ_MODE	Κατάσταση λειτουργίας	0: Ψύξη 1: Αφύγρανση 2: Ανεμιστήρας 3: Θέρμανση 4: Αυτόματο	Ανάγνωση
11	READ_FAN	Κατάσταση ανεμιστήρα	0: Χαμηλή 1: Μεσαία 2: Υψηλή 3: High2 4: Αυτόματο	Ανάγνωση
12	READ_TSET	Κατάσταση ρύθμιση θερμοκρασίας	ºC (Ρυθμίστε σύμφωνα με το εύρος λειτουργίας της μονάδας)	Ανάγνωση
13	READ_LOUVER	Κατάσταση περσίδων	0 ~ 7 (το 7 είναι στην αυτόματη λειτουργία)	Ανάγνωση
14	Δεν χρησιμ.	(Δεν χρησιμοποιείται)	(Δεν χρησιμοποιείται)	Δεν χρησιμ.
15	TIN	Ανάγνωση θερμοκρασίας εισόδου (2)	-63ºC ~ 63ºC	Ανάγνωση
16	TOUT	Ανάγνωση θερμοκρασίας εξόδου (2)	-63ºC ~ 63ºC	Ανάγνωση
17	TGAS	Ανάγνωση θερμοκρασίας σωλήνα αερίου (2)	-63ºC ~ 63ºC	Ανάγνωση
18	TLIQUID	Ανάγνωση θερμοκρασίας σωλήνα υγρού (2)	-63ºC ~ 63ºC	Ανάγνωση
19	ERROR_CODE	Κωδικός προειδοποίησης	Μονάδα προειδοποίησης από 7 τμήματα	Ανάγνωση

Offset (1)	Όνομα	Περιγραφή	Τιμές	Ανάγνωση/Εγγραφή
20	STOP_CAUSE	Αιτία διακοπής συμπιεστή	(Διαβάστε το εγχειρίδιο συντήρησης της μονάδας)	Ανάγνωση
21	VALVE_OPEN	Άνοιγμα βαλβίδας εκτόνωσης εσωτερικής μονάδας	0~100	Δεν χρησιμ.
22	OPER_CONDITION	Κατάσταση λειτουργίας μονάδας	0: OFF 1: Thermo OFF 2: Thermo ON 3: Προειδοποίηση	Ανάγνωση
23	Δεν χρησιμ.	Δεν χρησιμ.	Δεν χρησιμ.	Δεν χρησιμ.
24	AMBIENT TEMPERATURE	Θερμοκρασία περιβάλλοντος (2)	-63ºC ~ 63ºC	Ανάγνωση
25	RCS_TEM	Θερμοκρασία διακόπτη τηλεχειριστηρίου (μόνο αν είναι διαθέσιμος στη μονάδα) (2)	-63ºC ~ 63ºC	Ανάγνωση
26	RCS_CONFIG	Διαμόρφωση απομακρυσμένου ελέγχου διακόπτη	b0: 0 Κύριο / 1 Δευτερεύον b1: 0 με τηλεχειριστήριο/ 1 χωρίς τηλεχειριστήριο	Ανάγνωση/Εγγραφή
27	RCS_GROUP	Ομάδα απομακρυσμένου ελέγχου διακόπτη	0: Χωρίς ομάδα 1~255	Ανάγνωση/Εγγραφή
28~30	Δεν χρησιμ.	(Δεν χρησιμοποιείται)	(Δεν χρησιμοποιείται)	Δεν χρησιμ.
31	REM_TEM	Θερμοκρασία απομακρυσμένου αισθητήρα (2)	-63ºC ~ 63ºC	Ανάγνωση

ΣΗΜΕΙΩΣΗ

- *(1) Η εγγεγραμμένη διεύθυνση υπολογίζεται ως: "N + (διεύθυνση * 32) + Offset" όπου:*
- *N Θέση δεδομένων πίνακα είναι 2000, θέση 20000 είναι επίσης διαθέσιμη να διατηρήσει τη συμβατότητα με το παλιό Modbus gateway.*
- *Διεύθυνση: Η διεύθυνση εσωτερικής μονάδας διαμορφώνεται μέσω του λογισμικού διαμόρφωσης.*
- *(2) Αυτοί οι αριθμοί αναφέρονται στην ένδειξη τιμής 16-bit χρησιμοποιώντας 2 επιπλέον μορφές για αρνητικές τιμές*
- *(3) Bit 0 (on/off) και Bit 4 (περσίδα) επιλέγεται μόνο όταν είναι ενεργοποιημένα όλα τα κεντρικά.*
- *Για να κλειδώσει πλήρως την ρύθμιση από το τηλεχειριστήριο (κεντρικό που παρουσιάζεται στο τηλεχειριστήριο) ρυθμίστε αυτή την εγγραφή έως 31.*

5.2.2 Διαθεσιμα δεδομενα για HC-A(16/64)MB

Offset	Περιγραφή	Τιμές	Read/Write	Availability		
				VRF	RAC	ATW
0	Exist	0: No exist	Read	O	O	
		1: Exist				
1	System address	H-LINK 1: 0~15	Read	O	O	
2	Unit address	H-LINK 2: 0~63		O	O	
3	Τύπος	0: Indoor Unit	Read	O	O	
4	On/Off setting order	0: Stop	Read/Write	O	O	
		1: Run				
5	Mode setting order	0: Cool	Read/Write	O	O	
		1: Dry				
		2: Fan				
		3: Heat				
		4: Auto				
6	Fan setting order	0: Low	Read/Write	O	O	
		1: Medium				
		2: High				
		3: High2				
		4: Auto				
7	Ρύθμιση θερμοκρασίας	ºC (set according to the unit working range)	Read/Write	O	O	
8	Temperature setting with 0.5°C intervals	ºC x 10 (19.5ºC read as 195)	Read/Write	O		
9	Heating temperature setting for AUTO Cool/Heat	°C	Read/Write	O		
10	Heating Temperature setting for AUTO Cool/heat with 0.5°C intervals	ºC x 10 (19.5ºC read as 195)	Read/Write	O		
11	Cooling Temperature setting for AUTO Cool/heat	°C	Read/Write	O		
12	Cooling Temperature setting for AUTO Cool/heat with 0.5°C intervals	ºC x 10 (19.5ºC read as 195)	Read/Write	O		
13	Louver setting	0 ~ 7 (7 is Auto)	Read/Write	O		
14	Central setting (2)	Bit 0: On/Off (always can be stopped)	Read/Write	O	O	
		Bit 1: Mode				
		Bit 2: Setting Temp				
		Bit 3: Fan				
		Bit4: Louver				
15	On/Off status	0: Off	Read	O	O	
		1: On				
16	Mode status	0: Cool	Read	O	O	
		1: Dry				
		2: Fan				
		3: Heat				
		4: Auto				

Offset	Περιγραφή	Τιμές	Read/Write	Availability		
				VRF	RAC	ATW
17	Fan status	0: Low 1: Medium 2: High 3: High2 4: Auto	Read	O	O	
18	Setting temperature status	ºC (set according to the unit working range)	Read	O	O	
19	Temperature setting with 0.5°C intervals status	ºC x10 (19.5ºC read as 195)	Read	O		
20	Heating temperature setting for AUTO Cool/Heat status	°C	Read	O		
21	Heating Temperature setting for AUTO Cool/heat with 0.5°C intervals status	ºC x 10 (19.5ºC read as 195)	Read	O		
22	Cooling Temperature setting for AUTO Cool/heat status	°C	Read	O		
23	Cooling Temperature setting for AUTO Cool/heat with 0.5°C intervals status	ºC x 10 (19.5ºC read as 195)	Read	O		
24	Louver status	0 ~ 7 (7 is Auto)	Read	O		
25	Air inlet temperature reading	-63ºC ~ 63ºC	Read	O		
26	Air outlet temperature reading	-63ºC ~ 63ºC	Read	O		
27	Gas pipe temperature reading	-63ºC ~ 63ºC	Read	O		
28	Liquid pipe temperature reading	-63ºC ~ 63ºC	Read	O		
29	Κωδικός προειδοποίησης	Alarm unit from 7-segment	Read	O	O(1)	
30	Compressor stop cause	(Read unit service manual)	Read	O		
31	Indoor unit expansion valve opening	0~100	Read	O		
32	Unit operation condition	0: OFF 1: Thermo OFF 2: Thermo ON 3: Alarm	Read	O	O	
33	Remote temperature sensor (THM4) value	-63ºC ~ 63ºC	Read	O		
34	Remote control switch temperature (only when available in the unit)	-63ºC ~ 63ºC	Read	O	O	
35	Remote control switch configuration	b0: 0 Master/1Slave b1: 0 wih RCS/1 Without RCS	Read/Write	O		
36	Remote control switch group	0: No group 1~255	Read/Write	O		
37	CN3 Configuration status	b0: Input 1 open/close b1: Input 2 open/close b2: Enabled/Disabled (Indicates if the unit has CN3 enabled with any function)	Read	O		
38~49	Reserved					

Offset	Περιγραφή	Τιμές	Read/Write	Availability		
				VRF	RAC	ATW
50	Control Unit Run/Stop	0: Stop 1: Run	Read/Write			O
51	Control Unit Mode	0: Cool 1: Heat	Read/Write			O
52	Control Circuit 1 Run/Stop	0: Stop 1: Run	Read/Write			O
53	Control Heat. OTC Zone 1	0: No 1: Points 2: Gradient 3: Fix	Read/Write			O
54	Control Cool. OTC 1	0: No 1: Points 2: Fix	Read/Write			O
55	Control Circuit 1: Water heating Fix Setting Temp	0~80	Read/Write			O
56	Control Circuit 1: Water cooling Fix Setting Temp	0~80	Read/Write			O
57	Έλεγχος κύκλωμα 1: Κατάσταση ECO	0: ECO 1: Comfort	Read/Write			O
58	Έλεγχος κύκλωμα 1: Θερμοκρασία μετατόπισης ECO θέρμανση	1~10	Read/Write			O
59	Control Circuit 1: Cool ECO Offset Temperature	1~10	Read/Write			O
60	Control Circuit 1: External MBS/KNX Thermostat Available	0: Not Available 1: Available	Read/Write			O
61	Control Zone 1: Thermostat Setting	0~65535	Read/Write			O
62	Control Zone 1: Room Ambient Temperature	-32667~32667	Read/Write			O
63	Control Circuit 2 Run/Stop	0: Stop 1: Run	Read/Write			O
64	Control Heat. OTC Zone 2	0: No 1: Points 2: Gradient 3: Fix	Read/Write			O
65	Control Cool. OTC Zone 2	0: No 1: Points 2: Fix	Read/Write			O
66	Control Circuit 2: Water heating Fix Setting Temp	0~80	Read/Write			O
67	Control Circuit 2: Water cooling Fix Setting Temp	0~80	Read/Write			O
68	Control Circuit 2: Eco mode	0: ECO 1: Comfort	Read/Write			O
69	Control Circuit 2: Heat ECO Offset Temperature	1~10	Read/Write			O

Offset	Περιγραφή	Τιμές	Read/Write	Availability		
				VRF	RAC	ATW
70	Control Circuit 2: Cool ECO Offset Temperature	1~10	Read/Write			O
71	Control Circuit 2: External MBS/KNX Thermostat Available	0: Not Available 1: Available	Read/Write			O
72	Control Zone 2: Thermostat Setting	0~65535	Read/Write			O
73	Control Zone 2: Room Ambient Temperature	-32667~32667	Read/Write			O
74	Control DHWT Run/Stop	0: Stop 1: Run	Read/Write			O
75	Control DHWT Setting Temperature	0~80	Read/Write			O
76	Έλεγχος επιτάχυνση DHW	0: No request 1: Request	Read/Write			O
77	Reserved					
78	Έλεγχος κατάσταση ζήτησης DHW	0: Standard 1: High demand	Read/Write			O
79	Control Swiming Pool Run/Stop	0: Stop 1: Run	Read/Write			O
80	Control Swiming Pool Setting Temperature	0~80	Read/Write			O
81	Control AntiLegionella Run/Stop	0: Stop 1: Run	Read/Write			O
82	Control AntiLegionella Setting Temperature	0~80	Read/Write			O
83	Control Block menu	0: No 1: Block (user cannot access the menu)	Read/Write			O
84	Control Yutaki Forced OFF	0: Normal Operation 1: Forced OFF	Read/Write			O
85	Space Heating Heater Forced OFF	0: Normal Operation 1: Heater Forced OFF	Read/Write			O
86	Control Communication Alarm bit	0: No 1: Alarm	Read/Write			O
87~99	Reserved					
100	Κατάσταση μονάδας Εκκίνηση/ Διακοπή	0: Stop 1: Run	Read			O
101	Status Mode	B0: 0: Cool / 1: Heat B1: 0: Normal / 1: Auto	Read			O
102	Status Circuit 1 Run/Stop	0: Stop 1: Run	Read			O
103	Status Heat. OTC 1	0: No 1: Points 2: Gradient 3: Fix	Read			O
104	Status Cool. OTC 1	0: No 1: Points 2: Fix	Read			O

Offset	Περιγραφή	Τιμές	Read/Write	Availability		
				VRF	RAC	ATW
105	Status Circuit 1: Water heating Fix Setting Temp	0~80	Read			O
106	Status Circuit 1: Water cooling Fix Setting Temp	0~80	Read			O
107	Status Circuit 1: Eco mode	0: ECO 1: Comfort	Read			O
108	Κατάσταση κύκλωμα 1: Θερμοκρασία μετατόπισης ECO θέρμανση	1~10	Read			O
109	Status Circuit 1: Cool ECO Offset Temperature	1~10	Read			O
110	Κατάσταση κύκλωμα 1: Θερμοκρασία ρύθμισης για θερμοστάτη	50~350 (5,0~35,0)	Read			O
111	Κατάσταση κύκλωμα 1: Θερμοκρασία δωματίου θερμοστάτη	0~1000 (0,0~100,0)	Read			O
112	Κατάσταση κύκλωμα 1: Θερμοκρασία ρύθμισης ασύρματη	50~350 (5,0~35,0)	Read			O
113	Κατάσταση κύκλωμα 1: Θερμοκρασία δωματίου ασύρματη	0~1000 (0,0~100,0)	Read			O
114	Status Circuit 2 Run/Stop	0: Stop 1: Run	Read			O
115	Status Heating OTC 2	0: No 1: Points 2: Gradient 3: Fix	Read			O
116	Status Cooling OTC 2	0: No 1: Points 2: Fix	Read			O
117	Status Circuit 2: Water heating Fix Setting Temp	0~80	Read			O
118	Status Circuit 2: Water cooling Fix Setting Temp	0~80	Read			O
119	Κατάσταση κύκλωμα 2: Κατάσταση ECO	0: ECO 1: Comfort	Read			O
120	Κατάσταση κύκλωμα 1: Θερμοκρασία μετατόπισης ECO θέρμανση	1~10	Read			O
121	Status Circuit 1: Cool ECO Offset Temperature	1~10	Read			O
122	Status Zone 2: Thermostat Setting	50~350 (5,0~35,0)	Read			O
123	Status Zone 2: Ambient Temperature	0~1000 (0,0~100,0)	Read			O
124	Status Circuit 2: Wireless Setting Temperature	50~350 (5,0~35,0)	Read			O
125	Status Circuit 2: Wireless Room temperature	0~1000 (0,0~100,0)	Read			O
126	Status DHWT Run/Stop	0: Stop 1: Run	Read			O
127	Status DHWT Setting Temperature	0~80	Read			O

Offset	Περιγραφή	Τιμές	Read/Write	Availability		
				VRF	RAC	ATW
128	Status DHW Boost	0: Disable 1: Enable	Read			O
129	Reserved					
130	Κατάσταση ζήτησης κατάσταση DHW	0: Standard 1: High demand	Read			O
131	Status DHW Temperature	-80~100	Read			O
132	Status Swim.Pool Run/Stop	0: Stop 1: Run	Read			O
133	Status Swim. Pool Setting Temperature	0~80	Read			O
134	Status Swim. Pool Temperature	-80~100	Read			O
135	Status AntiLeg. Run/Stop	0: Stop 1: Run	Read			O
136	Status AntiLeg.Setting Temperature	0~80	Read			O
137	Status block menu	0: No 1: Block	Read			O
138	Status Communication Alarm bit	0: No 1: Alarm	Read			O
139	LCD Central Mode	0: Local 1: Air (Not available for Yutampo) 2:Water (Not available for Yutampo) 3: Full	Read			O
140	Παραμετροποίηση συστήματος	b0: Zone 1 Heating Available b1: Zone 2 Heating Available b2: Zone 1 Cooling Available b3: Zone 2 Cooling Available b4: DHWT Available b5: SWP Available b6: Room thermostat available Zone 1 b7: Room thermostat available Zone 2 b8: Wireless Setting C1 b9: Wireless Setting C2 b10: Wireless Room Temperature C1 b11: Wireless Room Temperature C2 b12: Slave Unit	Read			O

Offset	Περιγραφή	Τιμές	Read/Write	Availability		
				VRF	RAC	ATW
141	Operation State	0: OFF 1: Cool Demand –OFF 2: Cool Thermo-OFF 3: Cool Thermo-ON 4: Heat Demand-OFF 5: Heat Thermo-OFF 6: Heat Thermo-ON 7: DHW-OFF 8: DHW-ON 9: SWP-OFF 10: SWP-ON 11: Alarm	Read			O
142	Outdoor Ambient T° (Outdoor ambient temperature)	-80~100	Read			O
143	Water Inlet T° (Water Inlet unit temperature)	-80~100	Read			O
144	Water outlet T° (Water outlet unit temperature)	-80~100	Read			O
145	H-Link Communication State	0: No alarm 1: There is no communication with RCS or Yutaki unit during more than 180 seconds 2: Data initialization	Read			O
146	Λογισμικό PCB		Read			O
147	Λογισμικό LCD		Read			O
148	Ικανότητα μονάδας		Read			O
149	Unit Power Consumption		Read			O
150	Water Outler HP (TwoHP)	0~100 Μόνο για YUTAKI S & S Combi	Read			O
151	Ta1av: Outdoor Unit Ambient Average Temperature	-80~100	Read			O
152	Ta2: Second Ambient Temperature (inst)	-80~100	Read			O
153	Ta2av: Second Ambient Temperature (avg)	-80~100				O
154	O2: Water outlet Temp 2 (Two2)	-80~100	Read			O
155	O3: Water outlet Temp 3 (Two3)	-80~100	Read			O
156	Tg: Gas Temperature (THMg)	-80~100	Read			O
157	Tl: Liquid Temperature (THMl)	-80~100	Read			O
158	EVI: Indoor expansion valve openning	0~100	Read			O
159	CD: Capacity Data		Read			O
160	Mixing Valve Opening	0~100	Read			O
161	Απόψυξη	0: No defrosting 1: Defrosting	Read			O

Offset	Περιγραφή	Τιμές	Read/Write	Availability		
				VRF	RAC	ATW
162	Unit Model	0: Yutaki S 1: Yutaki SC 2: Yutaki S80 3: Yutaki M 4: Yutaki SC Lite (New) 5: Yutampo (New) 6: YCC (New)	Read			O
163	Th: Water Temp Setting (Ttwo)	-80~100	Read			O
164	Water Flow	Water Flow [0.1m3/h]	Read			O
165	Pump Speed	0~100	Read			O
166	System status 2	Bit 0: Defrost Bit 1: Solar Bit 2: Water Pump 1 Bit 3: Water Pump 2 Bit 4: Water Pump 3 Bit 5: Compressor ON Bit 6: Boiler ON Bit 7: DHW Heater Bit 8: Space Heater Bit 9: Smart function input enabled Bit10: Forced OFF Bit11: DHW recirculation Pump State Bit12: Solar Pump Output State	Read			O
167	Alarm number	0: Alarm XXX: Alarm number	Read			O
168	R134a Discharge Temperature		Read			O
169	R134a Suction temperature		Read			O
170	R134a Discharge Pressure		Read			O
171	R134a Suction pressure		Read			O
172	R134a Compressor frequency		Read			O
173	R134a Indoor Expansion valve opening		Read			O
174	R134a Compressor current value		Read			O
175	R134a Retry Code		Read			O
176	R134 Te SH		Read			O
177	R134 Secondary Current		Read			O
178	R134 Stop Code		Read			O
179~ 189	Reserved					
190	YCC - Enabled Units	0~8	Read			O
191	YCC - Working Units	0~8	Read			O

Offset	Περιγραφή	Τιμές	Read/Write	Availability		
				VRF	RAC	ATW
192	YCC - Required Units	0~8	Read			O

NOTE

- *Register address is calculated as: 5000+(Modbus_Id*200)+offset*
- *Modbus_Id as configured by configuration software*
- *For VRF / Package units, only the relevant data are available (heating units registers will not give any value). The situation is the same for heating units (registers related to air/air units will not give any value).*
- *Availability:*
  - PAC: VRF and package units.
  - RAC: Domestic units connected to the H-link via PSC-6RAD or SPX-RAMHLK
  - ATW: Air to water units.
- *(1) Take into account only if it is different from zero.*
- *(2) Bit 0 (ON/OFF) and Bit 4 (Louver) selectable only when all centrals are actived.*
- *In order to full lock setting from RCS (Central shown in RCS) set this register to 31*

5.3 ΕΞΩΤΕΡΙΚΕΣ ΜΟΝΑΔΕΣ

Some state registers about outdoor unit have been added. Using these registers it is now possible to know the status of the refrigerant cycle. Some control registers have also been added.

Offset	Περιγραφή	Τιμές	Read/Write
0	Outdoor Air Temperature	-63ºC ~ 63ºC	Read
1	Compressor Discharge Temperature	0 ~ 200 ºC	Read
2	Heating Evaporating Temperature		Read
3	Number of operating Compressor		Read
4	Discharge Pressure	0.0 ~ 5.0 MPa (0.1 MPa)	Read
5	Suction Pressure	-0.2 ~2.0MPa (0.1 MPa or 0.01MPa depending unit)	Read
6	Total Current	0 ~ 255 A	Read
7	Total Real Frequency	0 ~ 255 Hz	Read
8	EVO1	0 ~ 100 %	Read
9	EVO2 / Hot Bypass	0 ~ 100 %	Read
10	EVB	0 ~ 100 %	Read
11	Outdoor Unit Option Enabled	0: Disable	Read/Write
		1: Enable (it's possible to use the following options, also if the value of register 16 "Power Level Set" is 1)	
12	Noise Control Enabled	0: Disable	Read/Write
		1: Enable (it's possible to send the noise level)	
13	Noise Control Level Set	0~9 (See the service manual of Outdoor unit, function db)	Read/Write
14	Power Control Enabled	0: Disable	Read/Write
		1: Enable (it's possible to send the power level)	
15	Power Level	0~100%	Read/Write
16	Power Level Set	0~100%	Read
17	Power Level Current Value	0~100%	Read
18	Power Control Possible	0: Not possible	Read
		1: Possible	

NOTE

- *Register address is calculated as: 5000+(Modbus_Id*200)+offset*
- *Modbus_Id as configured by configuration software*

5.4 ΠΡΟΑΙΡΕΤΙΚΕΣ ΛΕΙΤΟΥΡΓΙΕΣ

Some optional functions of the indoor units have been added so that they can be managed from the BMS.

Offset	Περιγραφή	Τιμές	Read/Write
0	b1 (Heating temperature compensation)	0~4	Read/Write
1	b2 (Circulation function at heating Thermo-OFF)	0~1	Read/Write
2	b4 (Change of filter cleaning period)	0~4	Read/Write
3	c5 (Static pressure selection)	0~2	Read/Write
4	c8 (Control by the temperature sensor of the remote control switch)	0~2	Read/Write
5	Cb (Selection of forced stoppage logic)	0~1	Read/Write
6	Cd (Stop of indoor unit fan during cooling Thermo-OFF conditions)	0~1	Read/Write
7	CE (Stop of indoor unit fan during heating Thermo-OFF conditions)	0~1	Read/Write
8	d1 (Management of indoor unit operation after a power supply cut off -option 1)	0~1	Read/Write
9	d3 (Management of indoor unit operation after a power supply cut off -option 2)	0~1	Read/Write
10	d4 (RPI(M) Prevention of low air outlet temperature in cooling mode)	0~1	Read/Write
11	d5 (Prevention of low air outlet temperature in heating mode)	0~1	Read/Write
12	E1 (KPI: Ventilation mode / Econofresh cooling mode)	0~2	Read/Write
13	E2 (KPI: Increase of air supply volume / Econofresh enthalpy Sensor)	0~1	Read/Write
14	E4 (KPI: Pre-cooling / preheating period / Econofresh: CO2 sensor)	0~2	Read/Write
15	E8 (Control for stop of the indoor unit fan during heating Thermo-OFF conditions (with remote sensor THM-R2AE connected to the THM4 connector in the indoor unit PCB)	0~1	Read/Write
16	E9 (Intermittent fan operation in heating stop)	0~1	Read/Write
17	Eb (Indoor unit fan control during cooling Thermo-OFF conditions)	0~2	Read/Write
18	EE (Control in “Automatic” indoor fan speed mode)	0~1	Read/Write
19	EF (Control in “Automatic” indoor fan speed mode (supporting High H))	0~1	Read/Write
20	H4 (KPI: Operation modes for the ventilation unit with energy recovery)	0~1	Read/Write
21	K5 (Detection level of the motion sensor kit)	0~2	Read/Write
22	K6 (Selection of allowed operation modes when the control sensor of the indoor unit is set by C8 function)	0~3	Read/Write

NOTE

- *Register address is calculated as: 40000+(Modbus_Id*100)+offset*
- *Modbus_Id as configured by configuration software*

5.5 ΛΙΣΤΑ ΚΩΔΙΚΩΝ ΠΡΟΕΙΔΟΠΟΙΗΣΗΣ

Η διεύθυνση 19 υποδεικνύει κωδικό προειδοποίησης όπως παρουσιάζεται στην εσωτερική μονάδα. Ανατρέξτε στο εγχειρίδιο συντήρησης για την επεξήγηση της προειδοποίησης και τη διαδικασία επιδιόρθωσης σε περίπτωση προειδοποίησης της εσωτερικής ή εξωτερικής μονάδας.

5.6 ΑΝΤΙΜΕΤΩΠΙΣΗ ΠΡΟΒΛΗΜΑΤΩΝ

ΚΩΔΙΚΟΣ ΠΡΟΕΙΔΟΠΟΙΗΣΗΣ	ΠΕΡΙΓΡΑΦΗ	ΠΡΟΛΗΠΤΙΚΟ ΜΕΤΡΟ
LED2 τρεμοσβήνει	Μη κανονική λειτουργία	Απενεργοποιήστε τη συσκευή παροχής ρεύματος και επαναφέρετέ την μετά από το 5 δευτερόλεπτα. Αν το LED2 τρεμοπαίζει ακόμα, επικοινωνήστε με την εξυπηρέτηση πελατών της Hitachi.

6 ΚΙΤ ΔΙΑΜΟΡΦΩΣΗΣ ΔΙΚΤΥΟΥ

Αυτό το εξάρτημα παρέχει όλα τα απαραίτητα καλώδια για εγκαταστάτες Hitachi όταν θέτουν σε λειτουργία μια εγκατάσταση Modbus.

Λίστα εξαρτημάτων:

Καλώδιο USB		Ανεστραμμένο καλώδιο Ethernet		Μνήμη USB	
1x		1x		1x	

Η μνήμη USB περιλαμβάνει ένα λογισμικό για τον έλεγχο της επικοινωνίας Modbus κατά την έναρξη λειτουργίας.

Το καλώδιο USB χρειάζεται μόνο κατά τη διαμόρφωση της συσκευής (παράμετροι δικτύου)

Το καλώδιο Ethernet παρέχεται για μια πιο γρήγορη σύνδεση με έναν φορητό υπολογιστή για τον έλεγχο επικοινωνίας Modbus.

HITACHI

00000

Johnson Controls-Hitachi Air Conditioning Spain, S.A.U.
Ronda Shimizu, 1 - Políg. Ind. Can Torrella
08233 Vacarisses (Barcelona) Spain

© Copyright 2020 Johnson Controls-Hitachi Air Conditioning Spain, S.A.U. – All rights reserved.

PMML0351A rev.4 - 04/2020

Printed in Spain